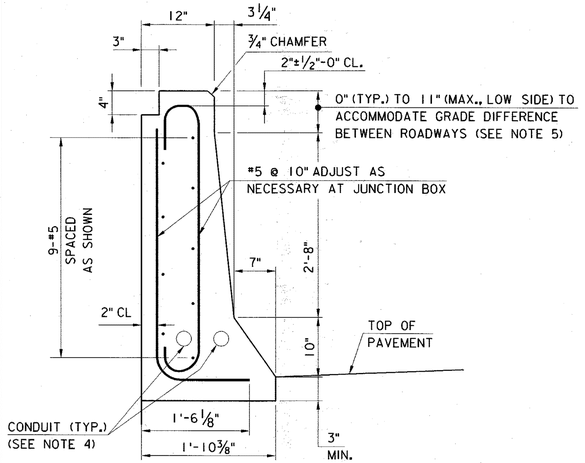

SECTION A-A 2
SCALE: 1" = 1'-0"

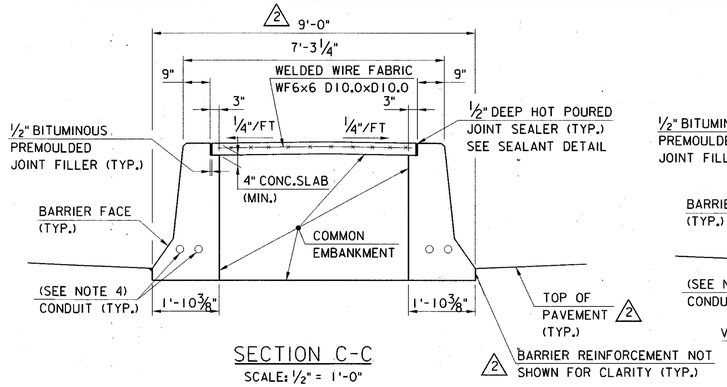

SECTION C-C
SCALE: ½" = 1'-0"

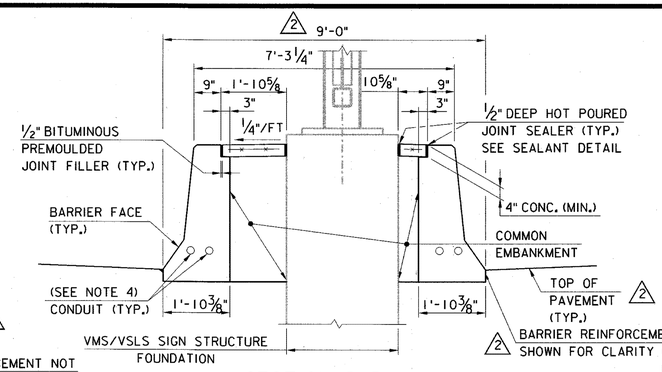

SECTION D-D
SCALE: ½" = 1'-0"

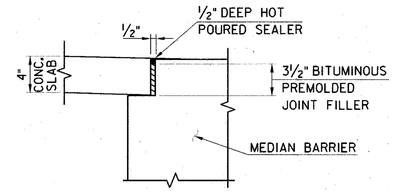

SEALANT DETAIL
N.T.S

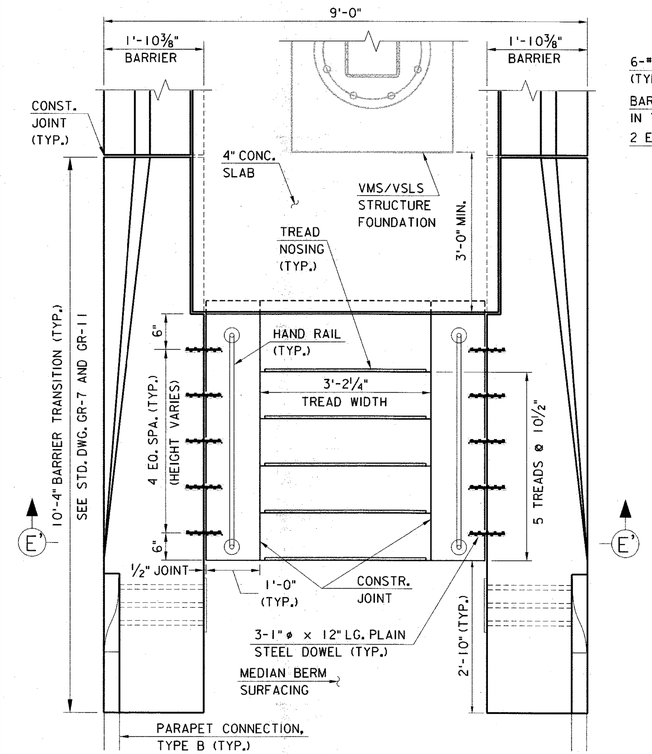

END STAIRWELL PLAN 2
SCALE: ¾" = 1'-0"

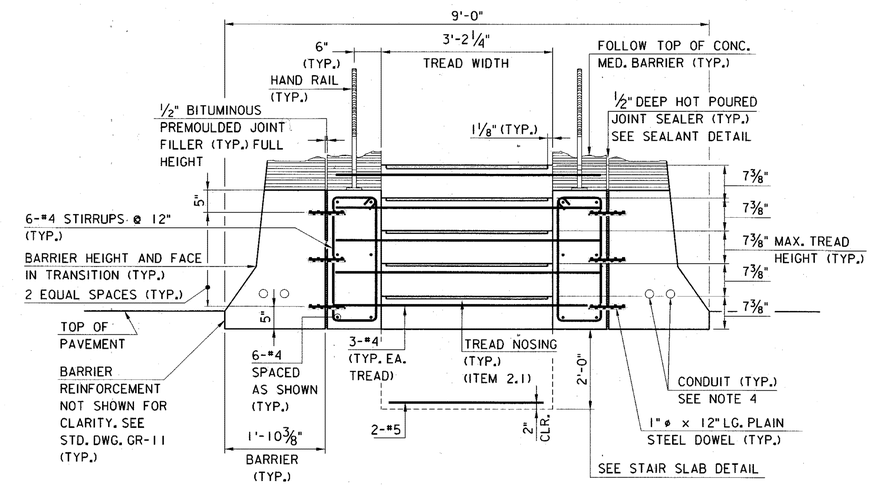

SECTION E'-E' 2
SCALE: ¾" = 1'-0"

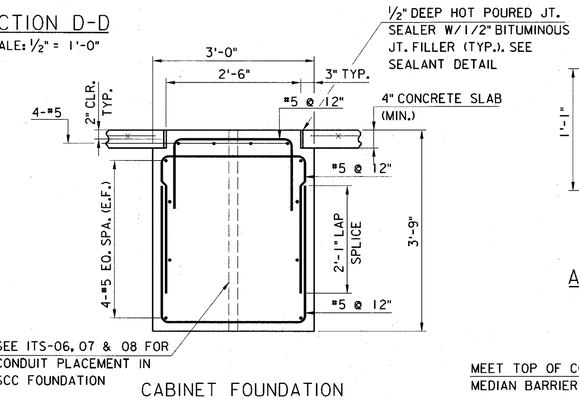

CABINET FOUNDATION
SECTION G-G
SCALE: ¾" = 1'-0"

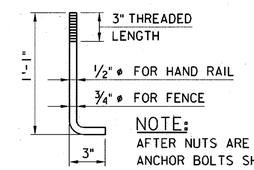

NOTE:
AFTER NUTS ARE TIGHTENED, ANCHOR BOLTS SHALL NOT PROJECT MORE THAN ⅜" ABOVE NUT.

ANCHOR BOLT DETAIL
N.T.S.

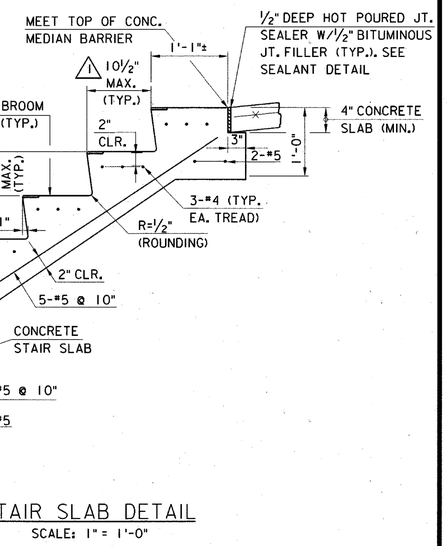

STAIR SLAB DETAIL
SCALE: 1" = 1'-0"

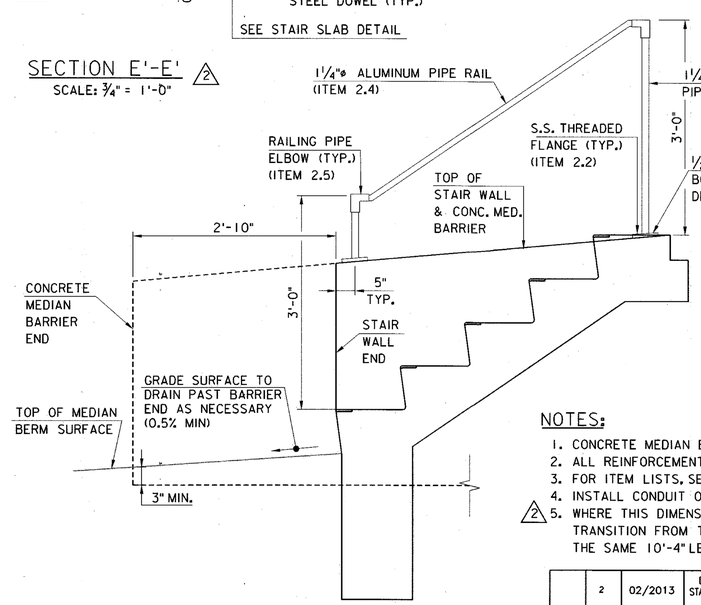

2 HANDRAIL DETAIL
SCALE: 1" = 1'-0"

NOTES:

1. CONCRETE MEDIAN BARRIER SHALL CONFORM TO SECTION 508.
2. ALL REINFORCEMENT SHALL BE EPOXY COATED.
3. FOR ITEM LISTS, SEE SHEET ITS-19
4. INSTALL CONDUIT OF SIZE AND TYPE AS SHOWN ON THE PLANS.
5. 2 WHERE THIS DIMENSION IS GREATER THAN 0", THE BARRIER HEIGHT TRANSITION FROM THE GUIDE RAIL CONNECTION SHALL OCCUR OVER THE SAME 10'-4" LENGTH AS SHOWN ON STD DWG ITS-17.

	BY	DATE
MADE	EMG	08/2010
TRACED	EG	08/2010
CHECKED	GH	08/2010
SUPERVISED	RJS	08/2010

0 ½ 1 2 3 4
ORIGINAL SIZE IN INCHES

APP.	NO.	DATE	REVISION
	2	02/2013	DELETED SECTIONS E-E AND F-F. REPLACED SECTIONS A-A AND E'-E', STAIRWELL PLAN, AND HANDRAIL DETAIL. ADDED CALL-OUTS AND DIMENSIONS ON SECTIONS C-C, D-D, AND STAIR SLAB DETAIL. ADDED NOTE 5.
	1	03/2011	ADDED DIMENSION, UPDATED CALL-OUTS
	0	08/2010	ORIGINAL DRAWING

NEW JERSEY TURNPIKE AUTHORITY
NEW JERSEY TURNPIKE

VMS EQUIPMENT MEDIAN – 2

HNTB 9 ENTIN ROAD, SUITE 202, PARSIPPANY, NJ 07054 – COA# 24GA28000700
ANTHONY L. BARTELLO
New Jersey Professional Engineer License No. GE 45842

STANDARD DRAWING
ITS–18

CONTRACT NO. SHEET NO. OF