State of New Jersey

Department of Transportation

GENERAL DESIGN CRITERIA AND STANDARD DRAWINGS FOR OVERHEAD AND CANTILEVER SIGN SUPPORT STRUCTURES

2002

(Metric Units)

GENERAL NOTES

A. DESIGN CRITERIA

DESIGN SPECIFICATIONS

1996 AASHTO STANDARD SPECIFICATIONS FOR HIGHWAY BRIDGES (16TH EDITION) AS MODIFIED BY SECTION 3 AND SECTION 32 OF THE CURRENT NJDOT DESIGN MANUAL - BRIDGES AND STRUCTURES, AND 1994 AASHTO STANDARD SPECIFICATIONS FOR STRUCTURAL SUPPORTS FOR HIGHWAY SIGNS, LUMINAIRES AND TRAFFIC SIGNALS.

DESIGN LOADS

DESIGN WIND VELOCITY ---- 129 KM/H
DESIGN ICE LOAD --------- 144 PA

SEISMIC LOADS FOR SEISMIC PERFORMANCE CATEGORY (SPC) B, A=0.18, SOIL PROFILE IV (REF. 1996 AASHTO, DIVISION 1A).

FATIGUE LOADS

ALL STRUCTURAL DETAILS HAVE BEEN DESIGNED FOR FATIGUE RESISTANCE UNDER THE FOLLOWING FATIGUE LOADS:

1) NATURAL WIND GUSTS: Pnw = 250Cd (PA),
WHERE Cd IS THE DRAG COEFFICIENT SPECIFIED IN SECTION 1.2.5 OF THE 1994 STANDARD SPECIFICATIONS FOR STRUCTURAL SUPPORTS FOR HIGHWAY SIGNS, LUMINAIRES, AND TRAFFIC SIGNALS. NATURAL WIND GUST PRESSURE RANGE APPLIED IN THE HORIZONTAL DIRECTION TO THE AREA PROJECTED ON A VERTICAL PLANE OF ALL SUPPORT STRUCTURE MEMBERS, SIGN PANELS AND WALKWAYS.

2) TRUCK-INDUCED GUSTS: Ptg = 1760Cd (PA),
WHERE Cd IS THE DRAG COEFFICIENT SPECIFIED IN SECTION 1.2.5 OF THE 1994 STANDARD SPECIFICATIONS FOR STRUCTURAL SUPPORTS FOR HIGHWAY SIGNS, LUMINAIRES, AND TRAFFIC SIGNALS. TRUCK GUST PRESSURE RANGE APPLIED IN THE UPWARD VERTICAL DIRECTION ALONG THE FULL LENGTH OF THE TRUSS SPAN TO THE AREA PROJECTED ON A HORIZONTAL PLANE OF ALL SUPPORT STRUCTURE MEMBERS, SIGN PANELS, AND WALKWAYS.

VARIABLE MESSAGE SIGN (VMS) STRUCTURES

REFER TO SECTION 32 OF THE NJDOT DESIGN MANUAL - BRIDGES AND STRUCTURES WHEN FURNISHING SUPPORT STRUCTURES FOR VARIABLE MESSAGE SIGNS (VMS).

CONCRETE DESIGN STRESSES

SPECIFIED COMPRESSIVE STRENGTH (f'c) (CLASS B) ---- 21 MPA
EXTREME FIBER COMPRESSIVE STRESS (fc) ---------- 8.4 MPA

REINFORCEMENT STEEL DESIGN STRESS

TENSILE STRESS (fs) (A615/A615M, GRADE 420) ---- 165 MPA

STRUCTURAL STEEL DESIGN STRENGTHS

YIELD STRENGTH (Fy)
PIPES (A53, TYPE S OR TYPE E, GRADE B) ---- 240 MPA (MIN.)
---- 355 MPA (MAX.)

FOUNDATIONS

MAXIMUM FOUNDATION BEARING PRESSURE ---- 0.120 MPA
FOOTINGS ARE DESIGNED SUCH THAT A MINIMUM OF 75 PERCENT OF THE FOOTING IS ALWAYS IN CONTACT; A MAXIMUM OF 25 PERCENT OF THE FOOTING IS IN UPLIFT.

BEARING PILES SHALL BE CAST-IN-PLACE CONCRETE PILES WITH A MINIMUM BEARING CAPACITY EQUAL TO 214 KN.

CAMBER

PERMANENT CAMBER EQUAL TO L/1000 HAS BEEN PROVIDED IN ADDITION TO THE DEAD LOAD CAMBER.

B. MATERIALS

I. STEEL

STEEL PIPE SHALL BE CERTIFIED BY MILL TEST REPORT TO MEET ASTM SPECIFICATION A53, TYPE E OR S, GRADE B WITH THE EXCEPTION THAT API 5L, GRADE B MAY BE USED WHEN THE SPECIFIED WALL THICKNESS IS GREATER THAN 13 MM. ONLY ELECTRICAL RESISTANCE WELDED (ERW) MANUFACTURED SINGLE SEAM PIPE IS PERMITTED. HOWEVER, WHEN THE REQUIRED PIPE SIZE IS GREATER THAN 600 MM, DOUBLE SEAM PIPE MAY BE USED. A MILL TEST REPORT MUST BE PROVIDED, CERTIFIED AND SIGNED BY THE PIPE MANUFACTURER, CONTAINING PHYSICAL AND CHEMICAL PROPERTIES AND THE MANUFACTURING PROCESS USED TO PRODUCE THE PIPE.

ALL OTHER STEEL SHALL CONFORM TO ASTM SPECIFICATION A36/A36M GRADE 250 OR AASHTO M270/M270M GRADE 345 (ASTM A709/A709M). ALL THIS SPECIFICATION STEEL SHALL MEET SUPPLEMENTARY REQUIREMENTS FOR NOTCH TOUGHNESS (CHARPY TESTING, ZONE #2)

REFER TO SUBSECTION 509.02 OF THE NJDOT STANDARD SPECIFICATIONS FOR ADDITIONAL REQUIREMENTS.

UPON COMPLETION OF FABRICATION, THE FABRICATOR SHALL PROVIDE A NOTARIZED CERTIFICATION OF COMPLIANCE AS PER SECTION 106.04 OF THE NJDOT STANDARD SPECIFICATIONS, INCLUDING A LEGIBLE COPY OF ALL MILL TEST REPORTS FOR MATERIALS INCORPORATED INTO THE WORK.

STEEL ANCHOR BOLTS, NUTS AND WASHERS SHALL CONFORM TO ASTM SPECIFICATION F1554, GRADE 250. THE ANCHOR BOLTS SHALL BE HOT DIP GALVANIZED AS PER ASTM SPECIFICATION A153, CLASS C.

CHORD SPLICE ASSEMBLY FASTENERS SHALL BE HIGH STRENGTH STEEL CONFORMING TO ASTM SPECIFICATION A325M AND SHALL BE HOT DIP GALVANIZED AS PER ASTM SPECIFICATION A153, CLASS C. ALL OTHER FASTENERS SHALL BE STAINLESS STEEL CONFORMING TO ASTM SPECIFICATION A320/A320M, GRADE B8, CLASS 1.

CAPS FOR THE ENDS OF CHORDS AND TOPS OF POSTS SHALL BE STEEL CONFORMING TO ASTM SPECIFICATION A36/A36M AND SHALL BE HOT DIP GALVANIZED IN ACCORDANCE WITH ASTM SPECIFICATION A123.

WELDING OF STEEL SHALL BE AS SPECIFIED IN THE CONSTRUCTION SPECIFICATIONS.

AFTER COMPLETE FABRICATION, EACH STEEL SECTION SHALL BE HOT DIP GALVANIZED ACCORDING TO THE REQUIREMENTS OF ASTM SPECIFICATION A123, AS MODIFIED BY THE CONSTRUCTION SPECIFICATIONS. A SINGLE DIP GALVANIZING PROCESS IS PREFERRED IF SIZE PERMITS.

II. ALUMINUM

ALUMINUM SHALL CONFORM TO THE ASTM SPECIFICATIONS AND ALLOYS LISTED BELOW:

APPLICATION	ASTM SPECIFICATION	ASTM ALLOY
ROLLED OR EXTRUDED SHAPES	B308/B308M	6061 - T6
PLATES	B209M	6061 - T6
DRAWN SEAMLESS TUBES	B210M	6061 - T6
EXTRUDED TUBES	B221M	6061 - T6

WELDING OF ALUMINUM SHALL BE AS SPECIFIED IN THE CONSTRUCTION SPECIFICATIONS.

III. REINFORCEMENT STEEL

ALL REINFORCEMENT STEEL SHALL BE ASTM A615/A615M, GRADE 420.

IV. CONCRETE

ALL CONCRETE SHALL BE "CONCRETE IN STRUCTURES, FOOTINGS", UNLESS OTHERWISE SPECIFIED BY THE DESIGNER.

V. SIGN LIGHTING

WHEN NECESSARY, AN APPROVED SIGN LIGHTING SYSTEM MAY BE USED AND THE DETAILS OF THE SYSTEM SHALL BE PROVIDED. NJDOT TRAFFIC SIGNAL AND SAFETY ENGINEERING SHOULD BE CONTACTED FOR REQUIREMENTS REGARDING THE PROVISION OF SIGN LIGHTING OR REFLECTORIZED SIGN PANELS.

VI MAINTENANCE WALKWAY

THE PROVISION OF MAINTENANCE WALKWAYS IS NOT REQUIRED. THE MAINTENANCE WALKWAY DETAIL SHEET SHALL BE EXCLUDED FROM SIGN STRUCTURE DRAWINGS WHEN WALKWAY IS NOT PROVIDED. IF THE WALKWAY IS PROVIDED, ADD THE FOLLOWING TO THE GENERAL NOTES OF THE SIGN STRUCTURE DRG. OH-D1. "MAINTENANCE WALKWAYS AND LUMINAIRE SUPPORTS SHALL BE ALUMINUM. SIGN HANGERS SHALL BE ALUMINUM OR STEEL. STEEL SURFACES SHALL BE PREVENTED FROM COMING INTO CONTACT WITH ALUMINUM SURFACES BY MEANS OF APPROVED PADS OR A PROTECTIVE COATING PLACED BETWEEN THE DISSIMILAR METALS. PADS SHALL BE STAINLESS STEEL CONFORMING TO ASTM SPECIFICATION A240, TYPE 304 OR APPROVED EQUAL."

INSTRUCTIONS FOR DESIGNERS

STEP #1: PREPARE A SIGN SUPPORT LOCATION PLAN AND ELEVATION VIEW FOR EACH STRUCTURE.

STEP #2: ENTER THE SIGN SUPPORT NUMBER AND STATION IN THE SCHEDULE OF STRUCTURES ON SIGN STRUCTURE DRG. OH-D2 OF THE CONTRACT PLANS.

STEP #3: DETERMINE THE TRUSS SPAN LENGTH AND HEIGHT OF THE STRUCTURE USING SIGN STRUCTURE DRG. OH-G2. RECORD THE ACTUAL TRUSS SPAN LENGTH IN THE SCHEDULE OF STRUCTURES ON SIGN STRUCTURE DRG. OH-D2 OF THE CONTRACT PLANS. ROUND THIS NUMBER TO THE NEXT HIGHER LISTED SPAN LENGTH. IF THE TRUSS SPAN LENGTH IS OVER 51 METERS, PROCEED TO STEP #17.

STEP #4: DETERMINE THE SIGN DESIGN LENGTH USING SIGN STRUCTURE DRG. OH-G2. DIVIDE THE SIGN DESIGN LENGTH BY THE TRUSS SPAN LENGTH DETERMINED IN STEP #3 TO OBTAIN THE PERCENT SIGN DESIGN LENGTH. USE THE NEXT HIGHER PERCENT FROM THOSE LISTED (40%, 60%, 70%, OR 80%). IF THE PERCENT IS MORE THAN 80, PROCEED TO STEP #5. OTHERWISE, SKIP TO STEP #6.

STEP #5: TO SELECT A STANDARD DESIGN, DIVIDE THE SIGN DESIGN LENGTH BY 80% AND ROUND THIS NUMBER TO THE NEXT HIGHER LISTED SPAN LENGTH. IF THE NUMBER IS LESS THAN 51 METERS, RETURN TO STEP #4. OTHERWISE, PROCEED TO STEP #17.

STEP #6: HAVING OBTAINED THE TRUSS SPAN LENGTH (FROM STEP #3 OR STEP #5) AND THE PERCENT SIGN DESIGN LENGTH (FROM STEP #4), SELECT THE TRUSS SIZE AND THE TRUSS ELEMENT SIZES (I.E., CHORDS, DIAGONALS, AND STRUTS) USING THE APPROPRIATE DESIGN TABLES ON SIGN STRUCTURE DRGS. OH-G3 AND OH-G4. RECORD THE DATA IN THE SCHEDULE OF STRUCTURES ON SIGN STRUCTURE DRGS. OH-D2 OF THE CONTRACT PLANS.

STEP #7: WITH THE TRUSS SPAN LENGTH KNOWN, DETERMINE THE MAXIMUM CAMBER REQUIRED FOR THE TRUSS FROM THE CAMBER TABLE SHOWN ON SIGN STRUCTURE DRG. OH-G3. RECORD THIS CAMBER IN THE SCHEDULE OF STRUCTURES ON SIGN STRUCTURE DRG. OH-D2 OF THE CONTRACT DRAWINGS.

STEP #8: WITH THE HEIGHT OF THE STRUCTURE OBTAINED IN STEP #3 AND USING THE ELEVATION OF THE BOTTOM OF BASE PLATE, DETERMINE THE ELEVATION OF THE CENTER LINE OF THE TRUSS AND THE DESIGN HEIGHT OF THE TOWERS. IF THE TOWERS ARE MORE THAN 12 METERS, SKIP TO STEP #17. OTHERWISE, SELECT THE NEXT HIGHER NUMBER FROM THOSE LISTED (8, 10, OR 12 METERS). USING THE SAME TABLE USED IN STEP #6, SELECT THE SIZES OF THE TOWER ELEMENTS (I.E., SHAFTS, DIAGONALS, AND STRUTS). RECORD THE DATA IN THE SCHEDULE OF STRUCTURES ON SIGN STRUCTURE DRG. OH-D2 OF THE CONTRACT DRAWINGS.

STEP #9: CHECK AVAILABILITY OF SHAPES SELECTED IN STEPS #6 AND #8.

STEP #10: USING SOIL TEST AND SOIL BORING INFORMATION, DETERMINE THE ALLOWABLE SOIL PRESSURE AND THE REQUIRED DEPTH OF FOOTINGS.

STEP #11: DETERMINE THE PEDESTAL HEIGHT. IF THE PEDESTAL HEIGHT IS BETWEEN 1.2 METERS AND 1.8 METERS, PROCEED TO STEP #12. OTHERWISE, SKIP TO STEP #17. THE PREFERRED PEDESTAL HEIGHT OF 1.4 METERS IS TO BE USED WHENEVER POSSIBLE. WHEN USING A BARRIER PEDESTAL, THE "COVERED" HEIGHT MUST BE 1.0 METER. OTHERWISE, SKIP TO STEP # 17

STEP #12: DETERMINE THE REQUIRED FOOTING SIZES USING THE DESIGN TABLES ON SIGN STRUCTURE DRGS. OH-G3 AND OH-G4. RECORD THE DATA IN THE SIGN SUPPORT FOUNDATION TABLE ON SIGN STRUCTURE DRG. OH-D3 OF THE CONTRACT PLANS.

STEP #13: DETERMINE THE REQUIRED FOOTING DESIGN DATA USING SIGN STRUCTURE DRG. OH-G6. RECORD THIS DATA IN THE SIGN SUPPORT FOUNDATION TABLE ON SIGN STRUCTURE DRG. OH-D3 OF THE CONTRACT PLANS. IF THE ALLOWABLE SOIL PRESSURE IS GREATER THAN 0.120 MEGAPASCALS, SKIP TO STEP #15. OTHERWISE, PROCEED TO STEP #14.

STEP #14: SELECT THE NUMBER OF CAST-IN-PLACE CONCRETE PILES NEEDED TO SUPPORT THE STRUCTURE USING SIGN STRUCTURE DRG. OH-G6. RECORD THE DATA IN THE SIGN SUPPORT FOUNDATION TABLE ON SIGN STRUCTURE DRG. OH-D3 OF THE CONTRACT PLANS.

STEP #15: DETERMINE WHETHER A PEDESTAL OR BARRIER PEDESTAL IS TO BE USED FOR THE FOUNDATION. SELECT ALL PEDESTAL OR BARRIER PEDESTAL DATA FROM SIGN STRUCTURE DRG. OH-G5. RECORD THE DATA IN THE SIGN SUPPORT FOUNDATION TABLE ON SIGN STRUCTURE DRG. OH-D3 OF THE CONTRACT PLANS.

STEP #16: THE DESIGN OF THE OVERHEAD SIGN SUPPORT STRUCTURE IS COMPLETE. DISREGARD STEP #17.

STEP #17: THE PARAMETERS OF THE SIGN SUPPORT STRUCTURE EXCEED THE RESTRICTIONS RELATED TO THESE STANDARD DESIGN TABLES. DESIGN THE SIGN SUPPORT STRUCTURE ON AN INDIVIDUAL BASIS.

INDEX OF DRAWINGS

DRG. NO.	DESCRIPTION
OH-G1	GENERAL INFORMATION
OH-G2	GENERAL CRITERIA
OH-G3	DESIGN TABLES - STEEL TRUSSES AND STEEL TOWERS (SPAN LENGTH 15M TO 24M)
OH-G4	DESIGN TABLES - STEEL TRUSSES AND STEEL TOWERS (SPAN LENGTH 27M TO 51M)
OH-G5	PEDESTAL AND BARRIER PEDESTAL DESIGN TABLES AND DETAILS
OH-G6	FOOTING DESIGN TABLES AND DETAILS

NOTE: ALL DIMENSIONS SHOWN ON THIS SHEET ARE IN METRIC UNITS.

THIS PLATE FOR DESIGN INFORMATION ONLY. DO NOT INCLUDE IN CONTRACT PLANS.

SIGN STRUCTURE DRG. OH-G1

NEW JERSEY DEPARTMENT OF TRANSPORTATION
BUREAU OF STRUCTURAL ENGINEERING

OVERHEAD SIGN SUPPORT STANDARDS

GENERAL INFORMATION

SCALE : NONE

ORIGINAL SHEET

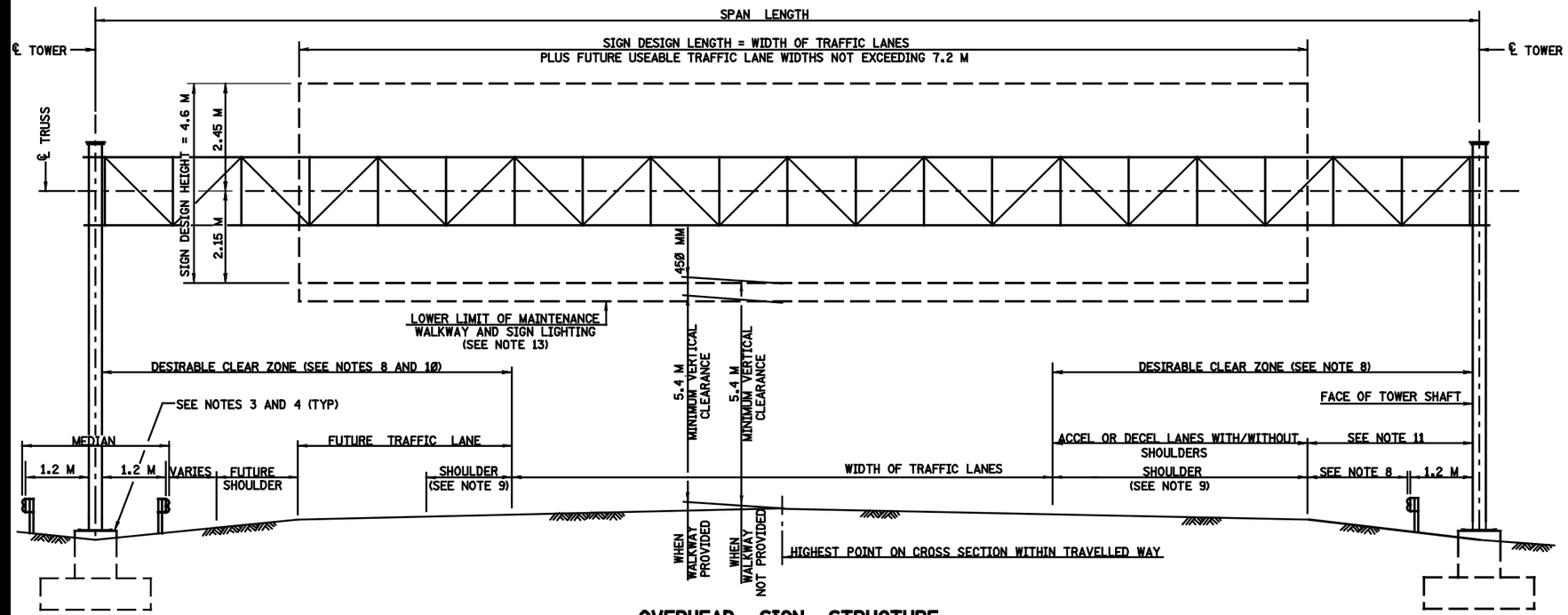

OVERHEAD SIGN STRUCTURE

DIVIDED HIGHWAY SYSTEMS

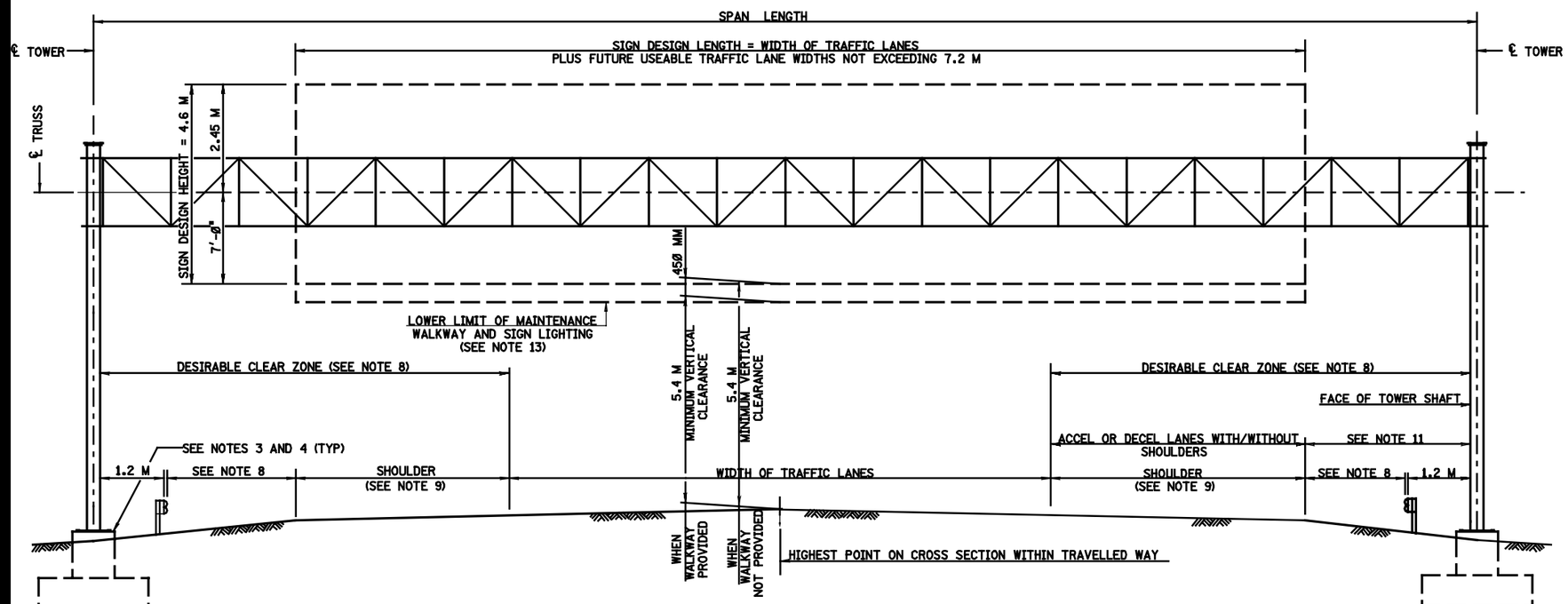

OVERHEAD SIGN STRUCTURE

NONDIVIDED HIGHWAY SYSTEM AND RAMPS

NOTES:

1. THE BOTTOM EDGE OF ALL SIGN PANELS SHALL BE LEVEL AND AT THE SAME ELEVATION.
2. THE TOP EDGE OF ALL SIGN PANELS SHALL PROJECT NOT LESS THAN 150 MM ABOVE THE TOP OF THE TOP CHORD. THE SIGN PANEL SIZES AND LOCATIONS SHALL BE VERIFIED AND APPROVED BY THE DESIGNER.
3. TOP OF PEDESTALS SHALL BE SET 100 MM ABOVE THE FINISHED GROUND LINE.
4. THE ELEVATION OF THE BOTTOM OF THE TOWER SHAFT BASE PLATES SHALL BE SET AT (ANCHOR BOLT DIA. + 25 MM) ABOVE TOP OF PEDESTAL OR TOP OF BARRIER PEDESTAL (SEE SIGN STRUCTURE DRG. OH-D8).
5. THE TRUSS SHALL BE A FOUR-CHORD, BOX SHAPED TRUSS.
6. IF REQUIRED, MAINTENANCE WALKWAY, RAILING AND LUMINAIRE SUPPORTS SHALL BE PROVIDED CONTINUOUSLY FOR THE ENTIRE SIGN DESIGN LENGTH. THE NEED FOR MAINTENANCE WALKWAY RAILING AND LUMINAIRE SUPPORTS SHALL BE VERIFIED AS PART OF THE PRELIMINARY SUBMISSION.
7. IF THE TOWER FOUNDATION IS WITHIN THE CLEAR ZONE, IT SHALL BE PROTECTED BY GUIDE RAIL, BARRIER OR OTHER SUITABLE MEANS, DEPENDING ON SITE CONDITIONS.
8. SEE NJDOT ROADWAY DESIGN MANUAL FOR CLEAR ZONE CRITERIA AND FOR GUIDE RAIL OFFSET CRITERIA.
9. SHOULDER IS NOT TO BE INCLUDED IN THE SIGN DESIGN LENGTH UNLESS THE SHOULDER IS WITHIN AN AREA PRESCRIBED AS A FUTURE USEABLE TRAFFIC LANE.
10. IF MEDIAN IS LESS THAN 1.5 M WIDE, PLACE THE CENTERLINE OF TOWER AT THE CENTERLINE OF MEDIAN.
11. THIS DIMENSION SHALL NOT BE LESS THAN 300 MM GREATER THAN THE MINIMUM CLEARANCE REQUIRED FOR OVERPASS STRUCTURES.
12. LEFT AND RIGHT TOWERS ARE DEFINED LOOKING UPSTATION.
13. WHEN MAINTENANCE WALKWAY IS NOT PROVIDED, THE 5.4 M VERTICAL UNDERCLEARANCE SHALL BE PROVIDED TO THE BOTTOM OF SIGN LIGHTING. THE WALKWAY RELATED DETAILS SHALL BE EXCLUDED FROM THE SIGN STRUCTURE PLANS.

NOTE: ALL DIMENSIONS SHOWN ON THIS SHEET ARE IN METRIC UNITS.

THIS PLATE FOR DESIGN INFORMATION ONLY. DO NOT INCLUDE IN CONTRACT PLANS.

SIGN STRUCTURE DRG. OH-G2

NEW JERSEY DEPARTMENT OF TRANSPORTATION
BUREAU OF STRUCTURAL ENGINEERING

OVERHEAD SIGN SUPPORT STANDARDS

GENERAL CRITERIA

SCALE : NONE

SPAN LENGTH (M)	SIGN LENGTH (Z)	TRUSS SIZE (M)	TRUSS MEMBERS: CHORDS O.D.xTHICK (MM)	TRUSS MEMBERS: DIAGONALS O.D.xTHICK (MM)	TRUSS MEMBERS: STRUTS O.D.xTHICK (MM)	TRUSS MEMBERS: END STRUTS O.D.xTHICK (MM)	TOWER MEMBERS H = 8 M: SHAFT O.D.xTHICK (MM)	TOWER MEMBERS H = 8 M: DIAGONAL O.D.xTHICK (MM)	TOWER MEMBERS H = 10 M: SHAFT O.D.xTHICK (MM)	TOWER MEMBERS H = 10 M: DIAGONAL O.D.xTHICK (MM)	TOWER MEMBERS H = 12 M: SHAFT O.D.xTHICK (MM)	TOWER MEMBERS H = 12 M: DIAGONAL O.D.xTHICK (MM)	TOWER MEMBERS: STRUTS O.D.xTHICK (MM)
15	40	1.25 (WIDTH) x 1.25 (DEPTH)	88.9x5.5	73.0x5.2	73.0x5.2	88.9x5.5	273.1x9.3	88.9x7.6	273.1x9.3	88.9x7.6	323.9x9.5	88.9x7.6	88.9x7.6
	60		88.9x5.5	73.0x5.2	73.0x5.2	88.9x5.5	273.1x9.3	88.9x7.6	323.9x9.5	88.9x7.6	323.9x9.5	88.9x7.6	88.9x7.6
	70		88.9x5.5	73.0x5.2	73.0x5.2	88.9x5.5	273.1x9.3	88.9x7.6	323.9x9.5	88.9x7.6	355.6x9.5	141.3x6.6	88.9x7.6
	80		88.9x5.5	73.0x5.2	73.0x5.2	88.9x5.5	273.1x9.3	88.9x7.6	323.9x9.5	88.9x7.6	355.6x9.5	141.3x6.6	88.9x7.6
18	40		88.9x5.5	73.0x5.2	73.0x5.2	88.9x5.5	273.1x9.3	88.9x7.6	273.1x9.3	88.9x7.6	323.9x9.5	88.9x7.6	88.9x7.6
	60		88.9x5.5	73.0x5.2	73.0x5.2	88.9x5.5	273.1x9.3	88.9x7.6	323.9x9.5	88.9x7.6	355.6x9.5	141.3x6.6	88.9x7.6
	70		88.9x5.5	73.0x5.2	73.0x5.2	88.9x5.5	273.1x9.3	88.9x7.6	323.9x9.5	88.9x7.6	355.6x9.5	141.3x6.6	88.9x7.6
	80		88.9x5.5	73.0x5.2	73.0x5.2	88.9x5.5	323.9x9.5	88.9x7.6	355.6x9.5	141.3x6.6	406.4x9.5	141.3x6.6	88.9x7.6
21	40		88.9x5.5	73.0x5.2	73.0x5.2	88.9x5.5	273.1x9.3	88.9x7.6	323.9x9.5	88.9x7.6	323.9x9.5	88.9x7.6	88.9x7.6
	60		88.9x5.5	73.0x5.2	73.0x5.2	88.9x5.5	273.1x9.3	88.9x7.6	323.9x9.5	88.9x7.6	406.4x9.5	141.3x6.6	88.9x7.6
	70		101.6x5.7	73.0x5.2	73.0x5.2	88.9x5.5	323.9x9.5	88.9x7.6	355.6x9.5	141.3x6.6	406.4x9.5	141.3x6.6	88.9x7.6
	80		101.6x5.7	73.0x5.2	73.0x5.2	88.9x5.5	323.9x9.5	88.9x7.6	355.6x9.5	141.3x6.6	406.4x9.5	141.3x6.6	88.9x7.6
24	40		101.6x5.7	73.0x5.2	73.0x5.2	88.9x5.5	273.1x9.3	88.9x7.6	323.9x9.5	88.9x7.6	355.6x9.5	141.3x6.6	88.9x7.6
	60		114.3x6.0	73.0x5.2	73.0x5.2	88.9x5.5	323.9x9.5	88.9x7.6	355.6x9.5	141.3x6.6	406.4x9.5	141.3x6.6	88.9x7.6
	70		114.3x6.0	73.0x5.2	73.0x5.2	88.9x5.5	323.9x9.5	88.9x7.6	355.6x9.5	141.3x6.6	406.4x9.5	141.3x6.6	88.9x7.6
	80		114.3x6.0	73.0x5.2	73.0x5.2	88.9x5.5	323.9x9.5	88.9x7.6	355.6x12.7	141.3x6.6	406.4x12.7	141.3x6.6	88.9x7.6

SPAN LENGTH (M)	SIGN LENGTH (Z)	FOOTINGS H = 8 M: FLxFW (M)	FOOTINGS H = 10 M: FLxFW (M)	FOOTINGS H = 12 M: FLxFW (M)	PEDESTALS H = 8 M: PD (MM)	PEDESTALS H = 8 M: VERT REBARS No. & SIZE	PEDESTALS H = 10 M: PD (MM)	PEDESTALS H = 10 M: VERT REBARS No. & SIZE	PEDESTALS H = 12 M: PD (MM)	PEDESTALS H = 12 M: VERT REBARS No. & SIZE	BARRIER PEDESTALS H = 8 M: BLxBWT (MM)	BARRIER PEDESTALS H = 8 M: VERT REBARS No. & SIZE	BARRIER PEDESTALS H = 10 M: BLxBWT (MM)	BARRIER PEDESTALS H = 10 M: VERT REBARS No. & SIZE	BARRIER PEDESTALS H = 12 M: BLxBWT (MM)	BARRIER PEDESTALS H = 12 M: VERT REBARS No. & SIZE
15	40	4.50x2.25	4.75x2.25	5.00x2.50	920	10-#19	920	11-#19	1020	12-#19	2750x770	31-#13	2750x770	31-#13	2750x770	31-#13
	60	4.50x2.25	5.00x2.50	5.50x2.50	920	9-#22	1020	13-#19	1020	14-#19	2750x770	31-#13	2750x770	23-#16	2750x770	26-#16
	70	4.75x2.25	5.00x2.50	5.75x2.50	920	9-#22	1020	13-#19	1070	11-#22	2750x770	23-#16	2750x770	26-#16	3050x840	28-#16
	80	5.00x2.50	5.50x2.50	5.75x2.50	920	10-#22	1020	10-#22	1070	11-#22	2750x770	23-#16	2750x770	26-#16	3050x840	28-#16
18	40	4.50x2.25	4.75x2.25	5.00x2.50	920	11-#19	920	12-#19	1020	13-#19	2750x770	31-#13	2750x770	31-#13	2750x770	24-#16
	60	4.75x2.25	5.50x2.50	5.75x2.50	920	9-#22	1020	10-#22	1070	11-#22	2750x770	23-#16	2750x770	26-#16	3050x840	28-#16
	70	5.00x2.50	5.50x2.50	5.75x2.75	920	10-#22	1020	11-#22	1070	12-#22	2750x770	26-#16	2750x770	29-#16	3050x840	30-#16
	80	5.50x2.50	5.75x2.75	6.00x2.75	1020	10-#22	1070	11-#22	1120	12-#22	2750x770	26-#16	3050x840	29-#16	3050x920	32-#16
21	40	4.75x2.25	5.00x2.50	5.75x2.50	920	9-#22	1020	9-#22	1020	10-#22	2750x770	31-#13	2750x770	35-#13	2750x770	26-#16
	60	5.00x2.50	5.50x2.75	6.00x2.75	920	10-#22	1020	11-#22	1120	12-#22	2750x770	26-#16	2750x770	29-#16	3050x920	30-#16
	70	5.50x2.50	5.75x2.75	6.00x3.00	1020	10-#22	1070	11-#22	1120	12-#22	2750x770	26-#16	3050x840	30-#16	3050x920	32-#16
	80	5.50x2.75	6.00x2.75	6.50x3.00	1020	11-#22	1070	12-#22	1120	13-#22	2750x770	29-#16	3050x840	30-#16	3050x920	26-#19
24	40	4.75x2.25	5.00x2.50	5.75x2.50	920	9-#22	1020	10-#22	1070	11-#22	2750x770	23-#16	2750x770	23-#16	3050x840	28-#16
	60	5.50x2.50	5.75x2.50	6.50x2.75	1020	10-#22	1070	11-#22	1120	12-#22	2750x770	26-#16	3050x840	30-#16	3050x920	32-#16
	70	5.75x2.50	6.00x2.75	6.50x3.00	1020	11-#22	1070	12-#22	1120	13-#22	2750x770	29-#16	3050x840	32-#16	3050x920	26-#19
	80	5.75x2.75	6.00x3.00	6.75x3.00	1020	12-#22	1070	10-#25	1120	11-#25	2750x770	31-#16	3050x840	32-#16	3050x920	28-#19

NOTES:

1. THE NUMBER OF SPLICES AND PANELS SHOWN IN THE TABLE ARE OPTIONAL. ONE OR MORE SPLICES IN THE TRUSS MAY BE ADDED OR ELIMINATED AT THE OPTION OF THE FABRICATOR. THE FABRICATOR MUST MAINTAIN A TRUSS UNIT LENGTH WHICH CAN BE GALVANIZED IN ONE PIECE. A MINIMUM OF ONE SPLICE IS REQUIRED FOR OBTAINING CAMBER.

2. END STRUTS ARE DEFINED AS THE TWO HORIZONTAL AND TWO VERTICAL STRUTS LOCATED IMMEDIATELY ADJACENT TO THE TOWERS (SEE DRG. OH-D5).

SUGGESTED STEEL TRUSS UNITS

ACTUAL SPAN FROM (M)	ACTUAL SPAN TO (M)	DESIGN SPAN (M)	No. OF SPLICES No.	No. OF SEGMENTS END	No. OF SEGMENTS MIDDLE	No. OF PANELS N No.	No. OF PANELS TOTAL No.
--	15	15	1	2	0	6	12
15	18	18	1	2	0	7	14
18	21	21	2	2	1	5	15
21	24	24	2	2	1	6	18
24	27	27	2	2	1	7	21
27	30	30	3	2	2	6	24
30	33	33	3	2	2	6	24
33	36	36	3	2	2	7	28
36	39	39	4	4	1	6	30
39	42	42	4	4	1	6	30
42	45	45	4	4	1	7	35
45	48	48	5	4	2	6	36
48	51	51	5	4	2	6	36

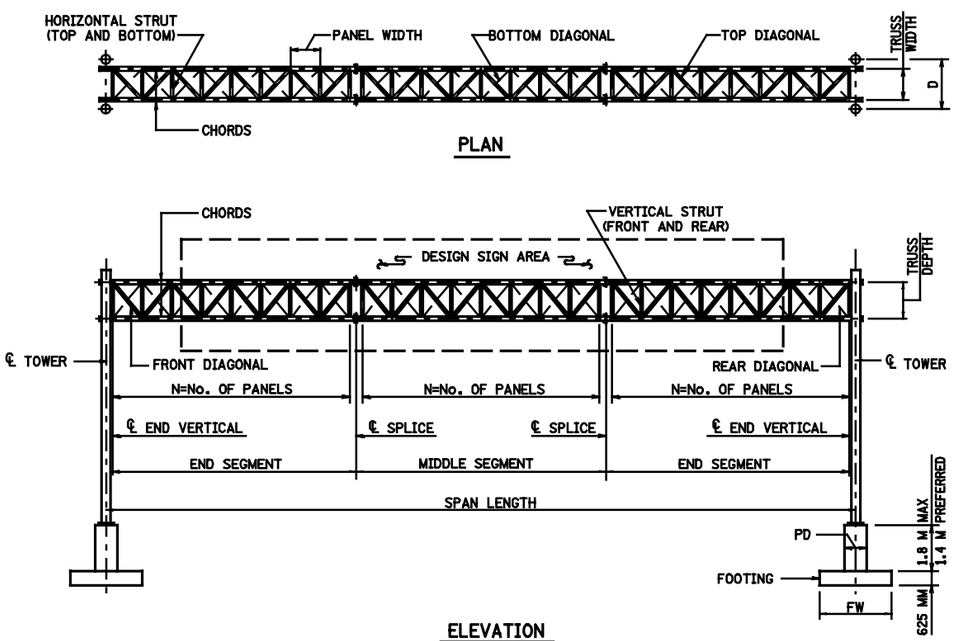

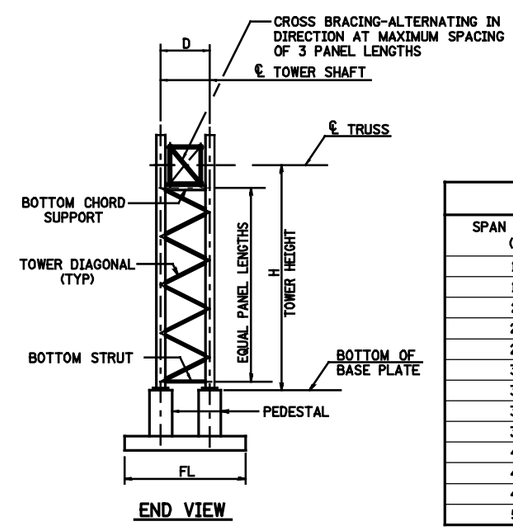

CAMBER	
SPAN LENGTH (M)	REQUIRED CAMBER (MM)
15	30
18	40
21	60
24	70
27	70
30	80
33	100
36	110
39	130
42	150
45	180
48	200
51	230

NOTE: ALL DIMENSIONS SHOWN ON THIS SHEET ARE IN METRIC UNITS.

THIS PLATE FOR DESIGN INFORMATION ONLY. DO NOT INCLUDE IN CONTRACT PLANS.

SIGN STRUCTURE DRG. OH-G3

NEW JERSEY DEPARTMENT OF TRANSPORTATION
BUREAU OF STRUCTURAL ENGINEERING

OVERHEAD SIGN SUPPORT STANDARDS DESIGN TABLES

STEEL TRUSSES AND STEEL TOWERS (SPAN LENGTH 15 M TO 24 M)

SCALE : NONE

SPAN LENGTH (M)	SIGN LENGTH (%)	TRUSS SIZE (M)	TRUSS MEMBERS: CHORDS O.D.xTHICK (MM)	TRUSS MEMBERS: DIAGONALS O.D.xTHICK (MM)	TRUSS MEMBERS: STRUTS O.D.xTHICK (MM)	TRUSS MEMBERS: END STRUTS O.D.xTHICK (MM)	TOWER MEMBERS H = 8 M: SHAFT O.D.xTHICK (MM)	TOWER MEMBERS H = 8 M: DIAGONAL O.D.xTHICK (MM)	TOWER MEMBERS H = 10 M: SHAFT O.D.xTHICK (MM)	TOWER MEMBERS H = 10 M: DIAGONAL O.D.xTHICK (MM)	TOWER MEMBERS H = 12 M: SHAFT O.D.xTHICK (MM)	TOWER MEMBERS H = 12 M: DIAGONAL O.D.xTHICK (MM)	TOWER MEMBERS: STRUTS O.D.xTHICK (MM)	FOOTINGS H = 8 M: FLxFW (M)	FOOTINGS H = 10 M: FLxFW (M)	FOOTINGS H = 12 M: FLxFW (M)	PEDESTALS H = 8 M: PD (MM)	PEDESTALS H = 8 M: VERT REBARS No. & SIZE	PEDESTALS H = 10 M: PD (MM)	PEDESTALS H = 10 M: VERT REBARS No. & SIZE	PEDESTALS H = 12 M: PD (MM)	PEDESTALS H = 12 M: VERT REBARS No. & SIZE	BARRIER PEDESTALS H = 8 M: BLxBWT (MM)	BARRIER PEDESTALS H = 8 M: VERT REBARS No. & SIZE	BARRIER PEDESTALS H = 10 M: BLxBWT (MM)	BARRIER PEDESTALS H = 10 M: VERT REBARS No. & SIZE	BARRIER PEDESTALS H = 12 M: BLxBWT (MM)	BARRIER PEDESTALS H = 12 M: VERT REBARS No. & SIZE	TRUSS SIZE (M)	SIGN LENGTH (%)	SPAN LENGTH (M)
27	40	1.25 (WIDTH) x 1.55 (DEPTH)	114.3x6.0	73.0x5.2	73.0x5.2	88.9x5.5	273.1x9.3	88.9x7.6	323.9x9.5	88.9x7.6	355.6x9.5	141.3x6.6	88.9x7.6	5.00x2.50	5.50x2.50	6.00x2.75	920	10-#22	1020	10-#22	1070	11-#22	2750x770	23-#16	2750x770	26-#16	3050x840	30-#16	1.25 (WIDTH) x 1.55 (DEPTH)	40	27
	60		141.3x6.6	73.0x5.2	73.0x5.2	88.9x5.5	323.9x9.5	88.9x7.6	355.6x9.5	141.3x6.6	406.4x9.5	141.3x6.6	88.9x7.6	5.75x2.50	6.00x2.75	6.50x2.75	1020	11-#22	1070	12-#22	1120	10-#25	2750x770	29-#16	3050x840	30-#16	3050x920	23-#19		60	
	70		141.3x6.6	73.0x5.2	73.0x5.2	88.9x5.5	323.9x9.5	88.9x7.6	406.4x9.5	141.3x6.6	406.4x12.7	141.3x6.6	88.9x7.6	6.00x2.75	6.00x3.00	6.75x3.00	1020	12-#22	1120	10-#25	1120	11-#25	2750x770	31-#16	3050x920	32-#16	3050x920	26-#19		70	
	80		141.3x6.6	73.0x5.2	73.0x5.2	88.9x5.5	355.6x9.5	141.3x6.6	406.4x9.5	141.3x6.6	406.4x12.7	141.3x6.6	88.9x7.6	6.50x2.75	6.50x3.00	7.00x3.00	1070	12-#22	1120	11-#25	1120	12-#25	3050x840	32-#16	3050x920	35-#16	3050x920	28-#19		80	
30	40		141.3x6.6	73.0x5.2	73.0x5.2	88.9x5.5	323.9x9.5	88.9x7.6	323.9x9.5	88.9x7.6	406.4x9.5	141.3x6.6	88.9x7.6	5.50x2.50	5.75x2.75	6.50x2.75	1020	10-#22	1020	11-#22	1120	12-#25	2750x770	26-#16	2750x770	29-#16	3050x920	23-#19		40	30
	60		141.3x6.6	73.0x5.2	73.0x5.2	88.9x5.5	323.9x9.5	88.9x7.6	406.4x9.5	141.3x6.6	406.4x12.7	141.3x6.6	88.9x7.6	5.75x2.75	6.00x3.00	6.75x3.00	1020	11-#22	1120	10-#25	1120	11-#25	2750x770	31-#16	3050x920	32-#16	3050x920	26-#19		60	
	70		168.3x7.1	73.0x5.2	73.0x5.2	88.9x5.5	355.6x9.5	141.3x6.6	406.4x9.5	141.3x6.6	406.4x12.7	141.3x6.6	88.9x7.6	6.00x2.75	6.50x3.00	7.00x3.00	1070	12-#22	1120	10-#25	1120	12-#25	3050x840	32-#16	3050x920	26-#19	3050x920	28-#19		70	
	80		168.3x7.1	73.0x5.2	73.0x5.2	88.9x5.5	355.6x12.7	141.3x6.6	406.4x12.7	141.3x6.6	457.2x12.7	168.3x7.1	88.9x7.6	6.50x3.00	6.75x3.00	7.50x3.25	1070	10-#25	1120	11-#25	1220	12-#25	3050x840	25-#19	3050x920	28-#19	3350x990	29-#19		80	
33	40		141.3x6.6	73.0x5.2	73.0x5.2	88.9x5.5	323.9x9.5	88.9x7.6	355.6x9.5	141.3x6.6	406.4x9.5	141.3x6.6	88.9x7.6	5.50x2.75	5.75x2.75	6.50x2.75	1020	10-#22	1070	11-#22	1120	12-#22	2750x770	26-#16	3050x840	30-#16	3050x920	23-#19		40	33
	60		168.3x7.1	73.0x5.2	73.0x5.2	88.9x5.5	355.6x9.5	141.3x6.6	406.4x9.5	141.3x6.6	406.4x12.7	141.3x6.6	141.3x6.6	6.00x2.75	6.50x3.00	7.00x3.00	1070	12-#22	1120	10-#25	1120	12-#25	3050x840	21-#19	3050x920	25-#19	3050x920	28-#19		60	
	70		168.3x7.1	73.0x5.2	73.0x5.2	88.9x5.5	355.6x12.7	141.3x6.6	406.4x12.7	141.3x6.6	457.2x12.7	168.3x7.1	141.3x6.6	6.50x3.00	6.50x3.25	7.00x3.25	1070	10-#25	1120	11-#25	1220	12-#25	3050x840	25-#19	3050x920	28-#19	3350x990	29-#19		70	
	80		219.1x8.2	73.0x5.2	73.0x5.2	88.9x5.5	355.6x12.7	141.3x6.6	406.4x12.7	141.3x6.6	457.2x12.7	168.3x7.1	141.3x6.6	6.75x3.00	6.75x3.25	7.50x3.25	1070	10-#25	1120	12-#25	1220	13-#25	3050x840	26-#19	3050x920	31-#19	3350x990	33-#19		80	
36	40		168.3x7.1	73.0x5.2	73.0x5.2	88.9x5.5	355.6x9.5	141.3x6.6	355.6x9.5	141.3x6.6	406.4x9.5	141.3x6.6	141.3x6.6	5.75x2.75	6.00x2.75	6.50x3.00	1070	10-#22	1070	12-#22	1120	10-#25	3050x840	30-#16	3050x840	30-#16	3050x920	23-#19		40	36
	60		219.1x8.2	73.0x5.2	73.0x5.2	88.9x5.5	355.6x9.5	141.3x6.6	406.4x9.5	141.3x6.6	457.2x9.5	168.3x7.1	141.3x6.6	6.00x3.00	6.50x3.00	7.00x3.25	1070	12-#22	1120	10-#25	1220	12-#25	3050x840	23-#19	3050x920	26-#19	3350x990	28-#19		60	
	70		219.1x8.2	73.0x5.2	73.0x5.2	88.9x5.5	355.6x12.7	141.3x6.6	406.4x12.7	141.3x6.6	457.2x12.7	168.3x7.1	141.3x6.6	6.50x3.00	6.75x3.25	7.50x3.25	1070	10-#25	1120	11-#25	1220	13-#25	3050x840	26-#19	3050x920	28-#19	3350x990	33-#19		70	
	80		219.1x8.2	73.0x5.2	73.0x5.2	88.9x5.5	355.6x12.7	141.3x6.6	406.4x12.7	141.3x6.6	457.2x12.7	168.3x7.1	141.3x6.6	6.75x3.00	7.00x3.25	7.75x3.25	1070	11-#25	1120	13-#25	1220	15-#25	3050x840	28-#19	3050x920	31-#19	3350x990	25-#22		80	
39	40	1.25 (WIDTH) x 1.55 (DEPTH)	219.1x8.2	73.0x5.2	73.0x5.2	88.9x5.5	355.6x9.5	141.3x6.6	406.4x9.5	141.3x6.6	406.4x12.7	141.3x6.6	141.3x6.6	6.00x2.75	6.00x3.00	6.75x3.00	1070	11-#22	1120	12-#22	1120	10-#25	3050x840	30-#16	3050x920	23-#19	3050x920	26-#19	1.25 (WIDTH) x 1.55 (DEPTH)	40	39
	60		219.1x8.2	73.0x5.2	73.0x5.2	88.9x5.5	355.6x12.7	141.3x6.6	406.4x12.7	141.3x6.6	457.2x12.7	168.3x7.1	141.3x6.6	6.50x3.00	7.00x3.00	7.50x3.25	1070	10-#25	1120	11-#25	1220	12-#25	3050x840	25-#19	3050x920	28-#19	3350x990	29-#19		60	
	70		219.1x8.2	73.0x5.2	73.0x5.2	88.9x5.5	355.6x12.7	141.3x6.6	406.4x12.7	141.3x6.6	457.2x12.7	168.3x7.1	141.3x6.6	6.75x3.00	7.00x3.25	7.75x3.25	1070	11-#25	1120	12-#25	1220	14-#25	3050x840	28-#19	3050x920	31-#19	3350x990	33-#19		70	
	80		219.1x8.2	73.0x5.2	73.0x5.2	88.9x5.5	406.4x12.7	141.3x6.6	457.2x12.7	168.3x7.1	508.0x12.7	168.3x7.1	141.3x6.6	7.00x3.00	7.50x3.25	7.75x3.50	1120	11-#25	1220	13-#25	1320	15-#25	3050x920	28-#19	3350x990	32-#19	3350x1200	25-#22		80	
42	40		219.1x8.2	73.0x5.2	73.0x5.2	88.9x5.5	355.6x9.5	141.3x6.6	406.4x9.5	141.3x6.6	406.4x12.7	141.3x6.6	141.3x6.6	6.00x3.00	6.50x3.00	6.75x3.25	1070	11-#22	1120	10-#25	1120	11-#25	3050x840	30-#16	3050x920	23-#19	3050x920	27-#19		40	42
	60		273.1x9.3	73.0x5.2	73.0x5.2	88.9x5.5	355.6x12.7	141.3x6.6	406.4x12.7	141.3x6.6	457.2x12.7	168.3x7.1	141.3x6.6	6.75x3.00	7.00x3.25	7.75x3.25	1070	10-#25	1120	12-#25	1220	13-#25	3050x840	27-#19	3050x920	31-#19	3350x990	33-#19		60	
	70		273.1x9.3	73.0x5.2	73.0x5.2	88.9x5.5	355.6x12.7	141.3x6.6	457.2x12.7	168.3x7.1	508.0x12.7	168.3x7.1	141.3x6.6	6.75x3.25	7.50x3.25	7.75x3.50	1070	11-#25	1220	12-#25	1320	14-#25	3050x840	28-#19	3350x990	31-#19	3350x1200	25-#22		70	
	80		273.1x9.3	73.0x5.2	73.0x5.2	88.9x5.5	406.4x12.7	141.3x6.6	457.2x12.7	168.3x7.1	508.0x12.7	168.3x7.1	141.3x6.6	7.00x3.25	7.75x3.25	8.00x3.50	1120	12-#25	1220	14-#25	1320	15-#25	3050x920	31-#19	3350x990	32-#19	3350x1200	27-#22		80	
45	40		273.1x9.3	88.9x5.5	88.9x5.5	88.9x5.5	355.6x9.5	141.3x6.6	406.4x9.5	141.3x6.6	406.4x12.7	141.3x6.6	141.3x6.6	6.00x3.00	6.75x3.00	7.00x3.25	1070	11-#22	1120	10-#25	1120	11-#25	3050x840	21-#19	3050x920	25-#19	3050x920	28-#19		40	45
	60		273.1x9.3	88.9x5.5	88.9x5.5	88.9x5.5	355.6x12.7	141.3x6.6	406.4x12.7	141.3x6.6	457.2x12.7	168.3x7.1	141.3x6.6	7.00x3.00	7.50x3.25	7.75x3.50	1070	11-#25	1120	13-#25	1220	14-#25	3050x840	28-#19	3050x920	31-#19	3350x990	25-#22		60	
	70		273.1x9.3	88.9x5.5	88.9x5.5	88.9x5.5	406.4x12.7	141.3x6.6	457.2x12.7	168.3x7.1	508.0x12.7	168.3x7.1	141.3x6.6	7.00x3.25	7.50x3.50	8.00x3.50	1120	11-#25	1220	13-#25	1320	15-#25	3050x920	28-#19	3350x990	32-#19	3350x1200	27-#22		70	
	80		273.1x9.3	88.9x5.5	88.9x5.5	88.9x5.5	406.4x12.7	141.3x6.6	457.2x12.7	168.3x7.1	508.0x12.7	168.3x7.1	141.3x6.6	7.50x3.25	7.50x3.50	8.25x3.50	1120	12-#25	1220	14-#25	1320	13-#29	3050x920	31-#19	3350x990	35-#19	3350x1200	29-#22		80	
48	40		273.1x9.3	88.9x5.5	88.9x5.5	88.9x5.5	355.6x9.5	141.3x6.6	406.4x12.7	141.3x6.6	457.2x12.7	168.3x7.1	141.3x6.6	6.50x3.00	6.75x3.00	7.00x3.25	1070	12-#22	1120	10-#25	1220	11-#25	3050x840	23-#19	3050x920	27-#19	3350x990	28-#19		40	48
	60		323.9x9.5	88.9x5.5	88.9x5.5	88.9x5.5	406.4x12.7	141.3x6.6	457.2x12.7	168.3x7.1	508.0x12.7	168.3x7.1	141.3x6.6	7.00x3.00	7.50x3.25	8.00x3.50	1120	11-#25	1220	12-#25	1320	14-#25	3050x920	28-#19	3350x990	32-#19	3350x1200	25-#22		60	
	70		323.9x9.5	88.9x5.5	88.9x5.5	88.9x5.5	406.4x12.7	141.3x6.6	457.2x12.7	168.3x7.1	508.0x12.7	168.3x7.1	141.3x6.6	7.00x3.25	7.50x3.50	8.25x3.50	1120	12-#25	1220	14-#25	1320	15-#25	3050x920	23-#22	3350x990	35-#19	3350x1200	27-#22		70	
	80		323.9x9.5	88.9x5.5	88.9x5.5	88.9x5.5	406.4x12.7	141.3x6.6	508.0x12.7	168.3x7.1	558.8x12.7	168.3x7.1	141.3x6.6	7.50x3.25	7.75x3.50	8.25x4.00	1120	13-#25	1320	14-#25	1420	13-#29	3050x920	25-#22	3350x1200	27-#22	3500x1200	30-#22		80	
51	40		323.9x9.5	88.9x5.5	88.9x5.5	88.9x5.5	355.6x12.7	141.3x6.6	406.4x12.7	141.3x6.6	457.2x12.7	168.3x7.1	141.3x6.6	6.50x3.00	7.00x3.00	7.50x3.25	1070	12-#25	1120	10-#25	1220	12-#25	3050x840	25-#19	3050x920	28-#19	3350x990	29-#19		40	51
	60		323.9x9.5	88.9x5.5	88.9x5.5	88.9x5.5	406.4x12.7	141.3x6.6	457.2x12.7	168.3x7.1	508.0x12.7	168.3x7.1	141.3x6.6	7.00x3.25	7.50x3.50	8.25x3.50	1120	11-#25	1220	13-#25	1320	15-#25	3050x920	28-#19	3350x990	32-#19	3350x1200	27-#22		60	
	70		355.6x9.5	88.9x5.5	88.9x5.5	88.9x5.5	406.4x12.7	141.3x6.6	457.2x12.7	168.3x7.1	558.8x12.7	168.3x7.1	141.3x6.6	7.50x3.25	7.50x4.00	8.25x4.00	1120	13-#25	1220	15-#25	1420	15-#25	3050x920	25-#22	3350x990	35-#19	3500x1200	30-#22		70	
	80		355.6x9.5	88.9x5.5	88.9x5.5	88.9x5.5	457.2x12.7	168.3x7.1	508.0x12.7	168.3x7.1	558.8x12.7	168.3x7.1	141.3x6.6	7.50x3.50	7.50x4.00	8.25x4.00	1220	13-#25	1320	12-#29	1420	14-#29	3350x990	25-#22	3350x1200	27-#22	3500x1200	32-#22		80	

NOTES:

1. BASED ON INFORMATION RECEIVED FROM FABRICATORS OF NJDOT SIGN SUPPORT STRUCTURES, SIGN SIGN STRUCTURES FABRICATED WITH THESE TRUSS CHORD DIAMETERS MAY NOT FIT INTO READILY AVAILABLE GALVANIZING KETTLES. THEREFORE, IF SIGN STRUCTURES REQUIRING THESE TRUSS CHORD DIAMETERS ARE TO BE PROVIDED, THE DESIGNER SHALL ADD THE FOLLOWING NOTE TO SIGN STRUCTURE DRG. OH-D2

   "THE FABRICATOR MAY PROVIDE A TRUSS SIZE OF 1.219 X 1.524 METERS (4'-0" X 5'-0") IN LIEU OF THE 1.25 X 1.55 METERS TRUSS SIZE FOR THE STRUCTURES INDICATED IN THIS TABLE."

2. END STRUTS ARE DEFINED AS THE TWO HORIZONTAL AND TWO VERTICAL STRUTS LOCATED IMMEDIATELY ADJACENT TO THE TOWERS (SEE DRG. OH-D5).

NOTE: ALL DIMENSIONS SHOWN ON THIS SHEET ARE IN METRIC UNITS.

THIS PLATE FOR DESIGN INFORMATION ONLY. DO NOT INCLUDE IN CONTRACT PLANS.

SIGN STRUCTURE DRG. OH-G4

NEW JERSEY DEPARTMENT OF TRANSPORTATION
BUREAU OF STRUCTURAL ENGINEERING

OVERHEAD SIGN SUPPORT STANDARDS DESIGN TABLES

STEEL TRUSSES AND STEEL TOWERS (SPAN LENGTH 27 M TO 51 M)

SCALE : NONE

BARRIER PEDESTAL REINFORCEMENT

BARRIER SIZE BL×BWT (MM)	VOL OF CONC (C.M.)	HORIZONTAL BARS: #13 BAR, TYPE "B-2" No.	B (MM)	C (MM)	LENGTH (MM)	#13 BAR, TYPE "B-3" No.	E (MM)	F (MM)	LENGTH (MM)	#13 BAR, TYPE "B-4" No.	E (MM)	G (MM)	LENGTH (MM)	WEIGHT TOTAL (KG)
2750x770	5.4	10	630	300	1230	8	1740	670	3080	8	1740	790	3320	63.1
3050x840	6.3	11	700	300	1300	8	1940	700	3340	8	1940	830	3600	69.4
3050x920	6.8	11	780	300	1380	8	1940	740	3420	8	1940	870	3680	71.5
3350x990	7.8	12	850	300	1450	8	2140	780	3700	8	2140	900	3940	78.0
3350x1200	8.3	12	1060	300	1660	8	2140	880	3900	8	2140	1010	4160	83.9
3500x1200	8.7	13	1060	300	1660	8	2240	880	4000	8	2240	1010	4260	87.1

VERTICAL "B-1" BARS

SIZE	A (MM)	LENGTH (MM)	WEIGHT (KG)
#13	160	2420	2.4
#16	180	2440	3.8
#19	210	2470	5.5
#22	260	2520	7.7

BAR SHAPES

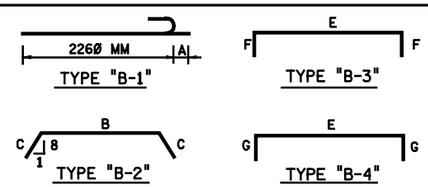

PEDESTAL REINFORCEMENT

PEDESTAL DIAMETER PD (MM)	VOL OF CONC (C.M.)	VERTICAL BARS TYPE "P-1" SIZE	A (MM)	LENGTH (MM)	WEIGHT (KG)	HORIZ BARS 7-#13 BARS, TYPE "P-2" D (MM)	LENGTH (MM)	WEIGHT (KG)
920	1.2	#19	210	2460	5.4	820	3040	21.2
920	1.2	#22	260	2510	7.6	820	3040	21.2
1020	1.5	#19	210	2460	5.4	920	3360	23.4
1020	1.5	#22	260	2510	7.6	920	3360	23.4
1070	1.6	#22	260	2510	7.6	970	3510	24.4
1070	1.6	#25	280	2530	10.1	970	3510	24.4
1120	1.8	#22	260	2510	7.6	1020	3670	25.5
1120	1.8	#25	280	2530	10.1	1020	3670	25.5
1220	2.1	#25	280	2530	10.1	1120	3980	27.7
1320	2.4	#25	280	2530	10.1	1220	4300	29.9
1320	2.4	#29	380	2630	13.3	1220	4300	29.9
1420	2.8	#25	280	2530	10.1	1320	4610	32.1
1420	2.8	#29	380	2630	13.3	1320	4610	32.1

BAR SHAPES

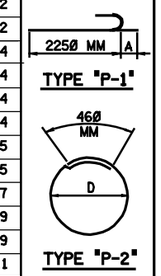

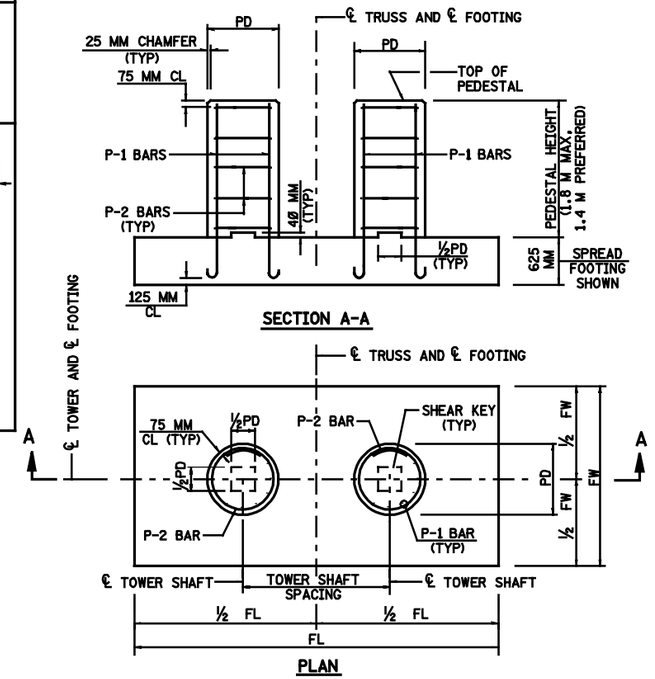

PEDESTAL DETAILS

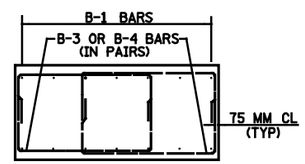

SECTION D-D

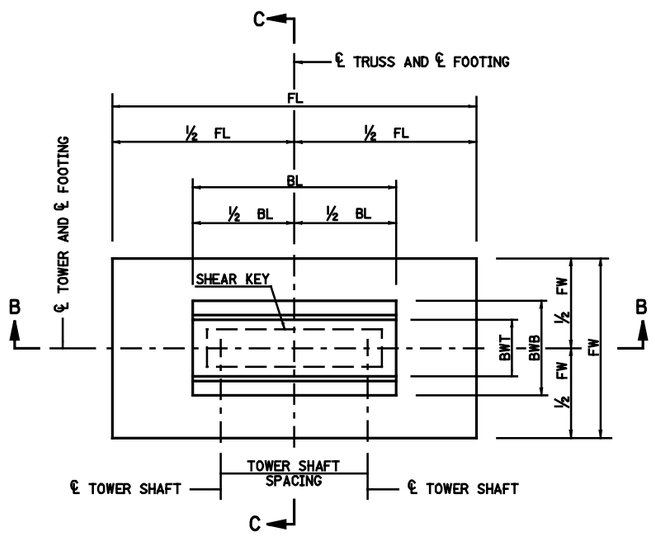

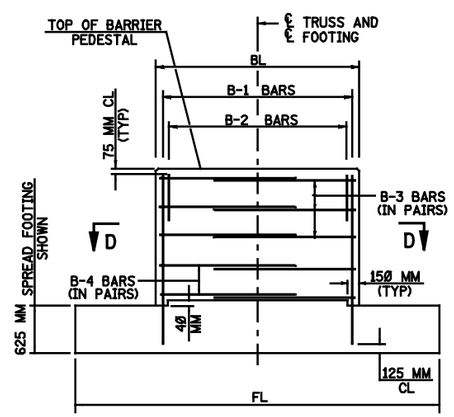

SECTION B-B

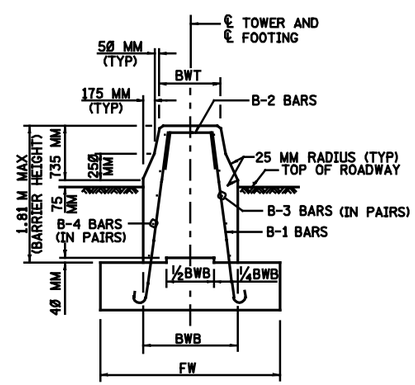

SECTION C-C

BARRIER PEDESTAL DETAILS

NOTES:

1. FOR GENERAL NOTES SEE SIGN STRUCTURE DRG. OH-G1.
2. FOR PEDESTAL AND BARRIER PEDESTAL DIMENSIONS AND REINFORCEMENT, SEE DESIGN TABLES ON SIGN STRUCTURE DRGS. OH-G3 AND OH-G4.
3. ALL REINFORCEMENT IN PEDESTALS AND BARRIER PEDESTALS SHALL BE CORROSION PROTECTED.
4. EXPOSED CONCRETE EDGES SHALL BE CHAMFERED 25 x 25 MM UNLESS NOTED OTHERWISE.
5. BARS SHALL NOT BE SPLICED EXCEPT AS PROVIDED ON THIS DRAWING OR AUTHORIZED BY THE ENGINEER. WHEN SPLICING IS APPROVED, THE REINFORCEMENT BARS SHALL BE LAPPED FOR A LENGTH OF AT LEAST 36 DIAMETERS AND SHALL BE SECURELY WIRED TOGETHER.
6. LENGTH OF BARS SHOWN IN TABLE ALREADY CONSIDER BENDS. DIMENSIONS DESCRIBED IN BAR SHAPES TABLE ARE OUT-TO-OUT OF BAR.
7. CONCRETE VOLUMES AND REINFORCEMENT SHOWN IN TABLES ARE FOR A 1.8 M HIGH PEDESTAL OR 1.81 M HIGH BARRIER PEDESTAL.
8. WEIGHT SHOWN IN TABLE FOR B-1 AND P-1 BARS IS FOR ONE BAR ONLY. TOTAL WEIGHT OF BARS TO BE DETERMINED BY THE DESIGNER.

NOTE: ALL DIMENSIONS SHOWN ON THIS SHEET ARE IN METRIC UNITS.

THIS PLATE FOR DESIGN INFORMATION ONLY. DO NOT INCLUDE IN CONTRACT PLANS.

SIGN STRUCTURE DRG. OH-G5

NEW JERSEY DEPARTMENT OF TRANSPORTATION
BUREAU OF STRUCTURAL ENGINEERING

OVERHEAD SIGN SUPPORT STANDARDS

PEDESTAL AND BARRIER PEDESTAL DESIGN TABLES AND DETAILS

SCALE : NONE

8/2/2019 06 ORIGINAL SHEET

SPREAD FOOTINGS			PILE FOOTINGS					FOOTING REINFORCEMENT				
SIZE FLxFW	CONCRETE VOLUME	EXCAV * VOLUME	CONCRETE VOLUME	EXCAV ** VOLUME	No.OF PILES IN ROW		TOTAL	No. AND SIZE OF BARS				TOTAL WEIGHT
(M)	(C.M.)	(C.M.)	(C.M.)	(C.M.)	"X" LONG	"Y" TRANS	No.	FLB	FWB	FLT	FWT	(KG)
4.50x2.25	6.3	29.7	7.8	31.5	4	3	12	6-#16	11-#16	6-#16	11-#16	155.4
4.75x2.25	6.7	31.2	8.3	33.2	4	3	12	8-#16	11-#16	6-#16	11-#16	174.4
5.00x2.50	7.8	36.0	9.7	38.2	4	3	12	10-#16	12-#16	6-#16	12-#16	211.1
5.50x2.50	8.6	39.4	10.7	41.8	5	3	15	12-#16	13-#16	6-#16	13-#16	247.7
5.50x2.75	9.5	42.9	11.7	45.6	5	3	15	13-#16	13-#16	7-#16	13-#16	274.5
5.75x2.50	9.0	41.1	11.1	43.6	5	3	15	10-#19	13-#16	7-#16	14-#16	288.2
5.75x2.75	9.9	44.7	12.3	47.5	5	3	15	12-#19	13-#16	7-#16	14-#16	324.0
6.00x2.75	10.3	46.6	12.8	49.5	5	3	15	13-#19	14-#16	8-#16	14-#16	359.8
6.00x3.00	11.3	50.4	14.0	53.5	5	3	15	13-#19	14-#16	8-#16	14-#16	370.7
6.50x2.75	11.2	50.3	13.9	53.4	5	3	15	14-#19	15-#16	9-#16	15-#16	413.0
6.50x3.00	12.2	54.4	15.1	57.8	5	3	15	17-#19	15-#16	10-#16	15-#16	477.5
6.50x3.25	13.2	58.5	16.4	62.2	5	4	20	18-#19	16-#16	10-#16	15-#16	508.4
6.75x3.00	12.7	56.4	15.7	59.9	5	3	15	15-#22	16-#16	8-#19	15-#16	561.9
6.75x3.25	13.7	60.7	17.0	64.4	5	4	20	16-#22	18-#16	8-#19	15-#16	603.9
7.00x3.00	13.1	58.4	16.3	62.0	5	4	20	17-#22	16-#16	9-#19	16-#16	639.6
7.00x3.25	14.2	62.8	17.6	66.7	5	4	20	19-#22	20-#16	9-#19	16-#16	713.6
7.50x3.25	15.2	67.1	18.9	71.3	5	4	20	22-#22	20-#16	12-#19	17-#16	874.6
7.50x3.50	16.4	71.9	20.3	76.3	5	4	20	22-#22	23-#16	12-#19	17-#16	904.8
7.50x4.00	18.8	81.3	23.3	86.4	6	4	24	24-#22	28-#16	13-#19	17-#16	1027.6
7.75x3.25	15.7	69.3	19.5	73.6	5	4	20	21-#22	19-#16	13-#19	18-#16	891.9
7.75x3.50	17.0	74.2	21.0	78.8	5	4	20	19-#25	23-#16	13-#19	18-#16	1016.1
8.00x3.50	17.5	76.5	21.7	81.2	6	4	24	19-#25	22-#16	14-#19	18-#16	1054.6
8.25x3.50	18.0	78.8	22.4	83.7	6	4	24	21-#25	23-#16	15-#19	19-#16	1174.8
8.25x4.00	20.6	89.2	25.6	94.7	6	4	24	24-#25	31-#16	16-#19	19-#16	1371.2

* SPREAD FOOTING EXCAVATION VOLUME BASED ON 2.425 M TOTAL DEPTH OF EXCAVATION.
** PILE FOOTING EXCAVATION VOLUME BASED ON 2.575 M TOTAL DEPTH OF EXCAVATION.

LEGEND:

FL = FOOTING LENGTH
FW = FOOTING WIDTH
FLB = No. AND SIZE OF BOTTOM BARS IN DIRECTION FL
FWB = No. AND SIZE OF BOTTOM BARS IN DIRECTION FW
FLT = No. AND SIZE OF TOP BARS IN DIRECTION FL
FWT = No. AND SIZE OF TOP BARS IN DIRECTION FW
PD = PEDESTAL DIAMETER
BWT = BARRIER WIDTH AT TOP

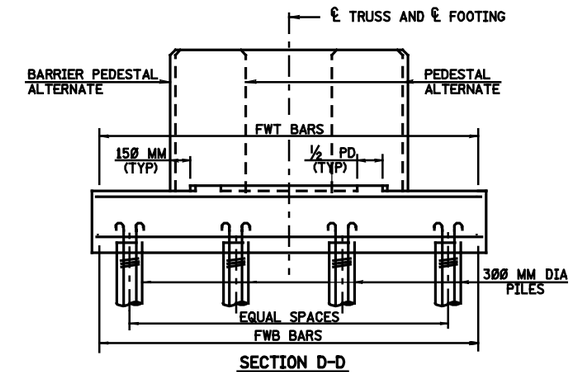

SECTION D-D

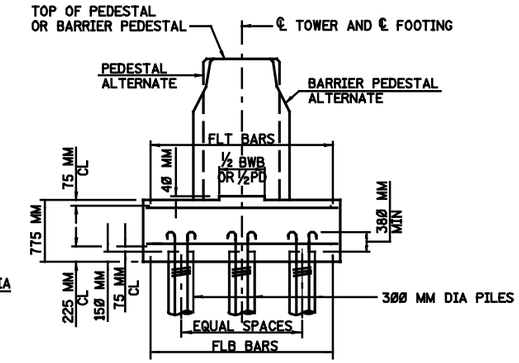

SECTION E-E

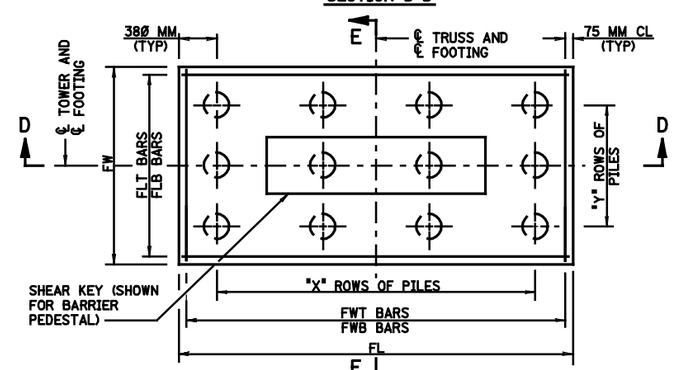

PLAN

PILE FOOTING DETAILS

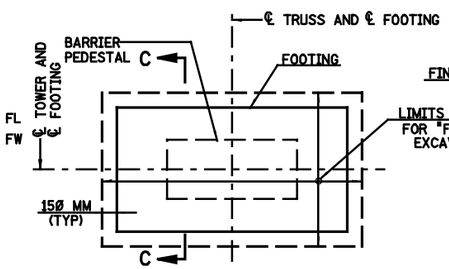

PLAN

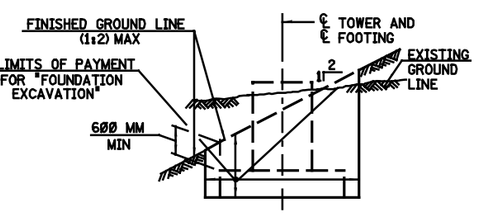

SECTION C-C

FOOTING EXCAVATION DETAILS

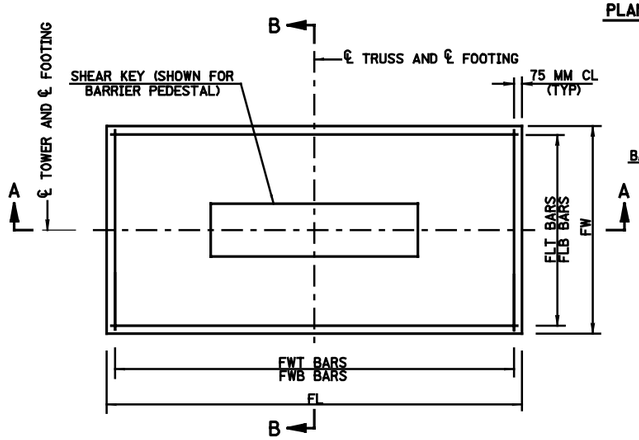

PLAN

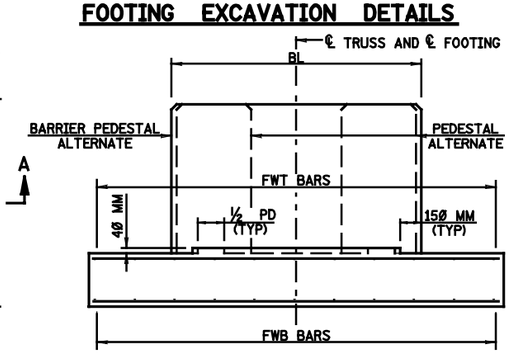

SECTION A-A

SPREAD FOOTING DETAILS

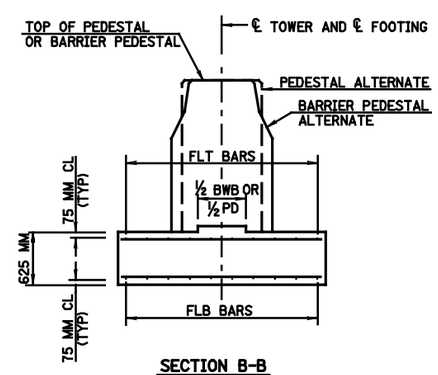

SECTION B-B

NOTES:

1. FOR GENERAL NOTES, SEE SIGN STRUCTURE DRG. OH-G1.
2. FOR FOOTING DIMENSIONS, SEE DESIGN TABLES ON SIGN STRUCTURE DRGS. OH-G3 AND OH-G4.
3. BARS SHALL NOT BE SPLICED EXCEPT AS PROVIDED ON THIS DRAWINGS OR AUTHORIZED BY THE ENGINEER. WHEN SPLICING IS APPROVED, THE REINFORCEMENT BARS SHALL BE LAPPED FOR A LENGTH OF AT LEAST 36 DIAMETERS AND SHALL BE SECURELY WIRED TOGETHER.
4. PILES SHALL BE CAST-IN-PLACE CONCRETE PILES WITH A MINIMUM BEARING CAPACITY EQUAL TO 214 KN.
5. PILE DESIGN SHALL CONFORM TO AASHTO SPECIFICATIONS FOR THE SEISMIC DESIGN OF HIGHWAY BRIDGES, SEISMIC PERFORMANCE CATEGORY B, SUBSECTION 6.3.1(C).
6. THE CASING OF THE CAST-IN-PLACE CONCRETE PILES SHALL BE LEFT IN PLACE AND SHALL BE DESIGNED TO RESIST BOTH DIRECT COMPRESSION AND BENDING. THE THICKNESS OF THE CASING SHALL BE NOT LESS THAN 5 MM.
7. THE LONGITUDINAL REINFORCING STEEL OF THE CAST-IN-PLACE CONCRETE PILES SHALL BE A MINIMUM OF 6-#16 BARS AND SHALL EXTEND THROUGH THE UPPER THIRD OF THE PILE OR 4.5 M DOWN INTO THE CASING, WHICHEVER IS GREATER, AND EMBEDDED INTO THE FOOTING WITH STANDARD HOOKS AS SHOWN.
8. THE SPIRAL REINFORCING FOR THE CAST-IN-PLACE CONCRETE PILES SHALL BE #13 REBARS AND SHALL EXTEND THROUGH THE UPPER THIRD OF THE PILE OR 4.5 M DOWN FROM THE TOP OF CASING, WHICHEVER IS GREATER.
9. ALTERNATE FOUNDATION DESIGNS MAY BE CONSIDERED BY THE DESIGNER WHERE APPROPRIATE. LOADS FOR THE DESIGN OF NON-STANDARD FOUNDATIONS ARE AVAILABLE FROM THE BUREAU OF STRUCTURAL ENGINEERING.

NOTE: ALL DIMENSIONS SHOWN ON THIS SHEET ARE IN METRIC UNITS.

THIS PLATE FOR DESIGN INFORMATION ONLY. DO NOT INCLUDE IN CONTRACT PLANS.

SIGN STRUCTURE DRG. OH-G6

NEW JERSEY DEPARTMENT OF TRANSPORTATION
BUREAU OF STRUCTURAL ENGINEERING

OVERHEAD SIGN SUPPORT STANDARDS

FOOTING DESIGN TABLES AND DETAILS

SCALE : NONE

6 / 6

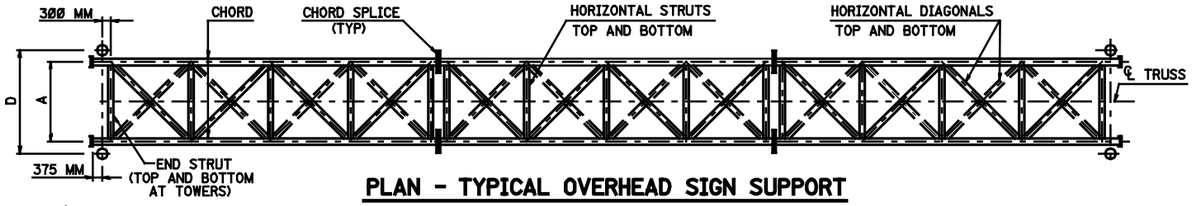

PLAN - TYPICAL OVERHEAD SIGN SUPPORT

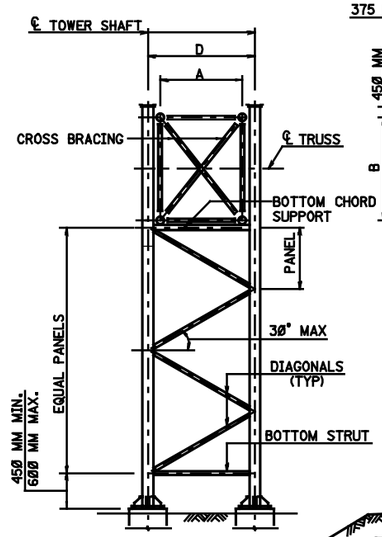

END ELEVATION

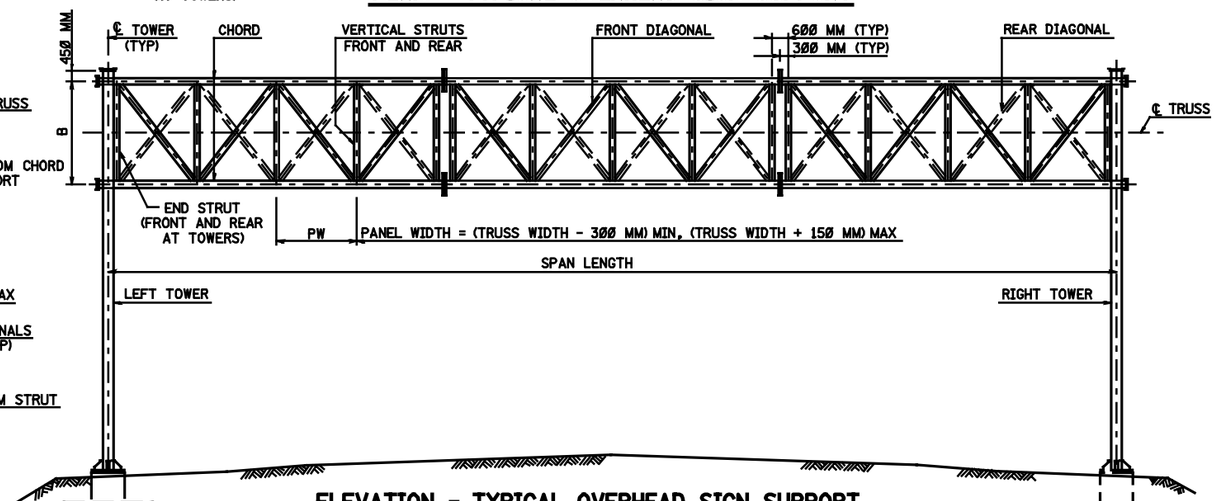

ELEVATION - TYPICAL OVERHEAD SIGN SUPPORT

(LOOKING UPSTATION)

GENERAL NOTES

A. DESIGN CRITERIA

DESIGN SPECIFICATIONS

1996 AASHTO STANDARD SPECIFICATIONS FOR HIGHWAY BRIDGES (16TH EDITION) AS MODIFIED BY SECTION 3 AND SECTION 32 OF THE CURRENT NJDOT DESIGN MANUAL - BRIDGES AND STRUCTURES, AND 1994 AASHTO STANDARD SPECIFICATIONS FOR STRUCTURAL SUPPORTS FOR HIGHWAY SIGNS, LUMINAIRES AND TRAFFIC SIGNALS.

DESIGN LOADS

DESIGN WIND VELOCITY ---- 129 KM/H
DESIGN ICE LOAD --------- 144 PA

SEISMIC LOADS FOR SEISMIC PERFORMANCE CATEGORY (SPC) B, A=0.18, SOIL PROFILE IV (REF. 1996 AASHTO, DIVISION 1A).

FATIGUE LOADS

ALL STRUCTURAL DETAILS HAVE BEEN DESIGNED FOR FATIGUE RESISTANCE UNDER THE FOLLOWING FATIGUE LOADS:

1) NATURAL WIND GUSTS: Pnw = 250Cd (PA),
WHERE Cd IS THE DRAG COEFFICIENT SPECIFIED IN SECTION 1.2.5 OF THE 1994 STANDARD SPECIFICATIONS FOR STRUCTURAL SUPPORTS FOR HIGHWAY SIGNS, LUMINAIRES, AND TRAFFIC SIGNALS. NATURAL WIND GUST PRESSURE RANGE APPLIED IN THE HORIZONTAL DIRECTION TO THE AREA PROJECTED ON A VERTICAL PLANE OF ALL SUPPORT STRUCTURE MEMBERS, SIGN PANELS AND WALKWAYS.

2) TRUCK-INDUCED GUSTS: Ptg = 1760Cd (PA),
WHERE Cd IS THE DRAG COEFFICIENT SPECIFIED IN SECTION 1.2.5 OF THE 1994 STANDARD SPECIFICATIONS FOR STRUCTURAL SUPPORTS FOR HIGHWAY SIGNS, LUMINAIRES, AND TRAFFIC SIGNALS. TRUCK GUST PRESSURE RANGE APPLIED IN THE UPWARD VERTICAL DIRECTION ALONG THE FULL LENGTH OF THE TRUSS SPAN TO THE AREA PROJECTED ON A HORIZONTAL PLANE OF ALL SUPPORT STRUCTURE MEMBERS, SIGN PANELS, AND WALKWAYS.

VARIABLE MESSAGE SIGN (VMS) STRUCTURES

REFER TO SECTION 32 OF THE NJDOT DESIGN MANUAL - BRIDGES AND STRUCTURES WHEN FURNISHING SUPPORT STRUCTURES FOR VARIABLE MESSAGE SIGNS (VMS).

CONCRETE DESIGN STRESSES

SPECIFIED COMPRESSIVE STRENGTH (f'c) (CLASS B) ---- 21 MPA
EXTREME FIBER COMPRESSIVE STRESS (fc) ---------- 8.4 MPA

REINFORCEMENT STEEL DESIGN STRESS

TENSILE STRESS (fs) (A615/A615M, GRADE 420) ---- 165 MPA

STRUCTURAL STEEL DESIGN STRENGTHS

YIELD STRENGTH (Fy)
PIPES (A53, TYPE S OR TYPE E, GRADE B) ---- 240 MPA (MIN.)
---- 355 MPA (MAX.)

FOUNDATIONS

MAXIMUM FOUNDATION BEARING PRESSURE ---- 0.120 MPA
FOOTINGS ARE DESIGNED SUCH THAT A MINIMUM OF 75 PERCENT OF THE FOOTING IS ALWAYS IN CONTACT; A MAXIMUM OF 25 PERCENT OF THE FOOTING IS IN UPLIFT.

BEARING PILES SHALL BE CAST-IN-PLACE CONCRETE PILES WITH A MINIMUM BEARING CAPACITY EQUAL TO 214 KN.

CAMBER

PERMANENT CAMBER EQUAL TO L/1000 HAS BEEN PROVIDED IN ADDITION TO THE DEAD LOAD CAMBER.

B. MATERIALS

I. STEEL

STEEL PIPE SHALL BE CERTIFIED BY MILL TEST REPORT TO MEET ASTM SPECIFICATION A53, TYPE E OR S, GRADE B WITH THE EXCEPTION THAT API 5L, GRADE B MAY BE USED WHEN THE SPECIFIED WALL THICKNESS IS GREATER THAN 13 MM. ONLY ELECTRICAL RESISTANCE WELDED (ERW) MANUFACTURED SINGLE SEAM PIPE IS PERMITTED. HOWEVER, WHEN THE REQUIRED PIPE SIZE IS GREATER THAN 600 MM, DOUBLE SEAM PIPE MAY BE USED. A MILL TEST REPORT MUST BE PROVIDED, CERTIFIED AND SIGNED BY THE PIPE MANUFACTURER, CONTAINING PHYSICAL AND CHEMICAL PROPERTIES AND THE MANUFACTURING PROCESS USED TO PRODUCE THE PIPE.

ALL OTHER STEEL SHALL CONFORM TO ASTM SPECIFICATION A36/A36M GRADE 250 OR AASHTO M270/M270M GRADE 345 (ASTM A709/A709M). ALL THIS SPECIFICATION STEEL SHALL MEET SUPPLEMENTARY REQUIREMENTS FOR NOTCH TOUGHNESS (CHARPY TESTING, ZONE #2)

REFER TO SUBSECTION 509.02 OF THE NJDOT STANDARD SPECIFICATIONS FOR ADDITIONAL REQUIREMENTS.

UPON COMPLETION OF FABRICATION, THE FABRICATOR SHALL PROVIDE A NOTARIZED CERTIFICATION OF COMPLIANCE AS PER SECTION 106.04 OF THE NJDOT STANDARD SPECIFICATIONS, INCLUDING A LEGIBLE COPY OF ALL MILL TEST REPORTS FOR MATERIALS INCORPORATED INTO THE WORK.

STEEL ANCHOR BOLTS, NUTS AND WASHERS SHALL CONFORM TO ASTM SPECIFICATION F1554, GRADE 250 THE ANCHOR BOLTS SHALL BE HOT DIP GALVANIZED AS PER ASTM SPECIFICATION A153, CLASS C.

CHORD SPLICE ASSEMBLY FASTENERS SHALL BE HIGH STRENGTH STEEL CONFORMING TO ASTM SPECIFICATION A325M AND SHALL BE HOT DIP GALVANIZED AS PER ASTM SPECIFICATION A153, CLASS C. ALL OTHER FASTENERS SHALL BE STAINLESS STEEL CONFORMING TO ASTM SPECIFICATION A320/A320M, GRADE B8, CLASS 1.

CAPS FOR THE ENDS OF CHORDS AND TOPS OF POSTS SHALL BE STEEL CONFORMING TO ASTM SPECIFICATION A36/A36M AND SHALL BE HOT DIP GALVANIZED IN ACCORDANCE WITH ASTM SPECIFICATION A123.

WELDING OF STEEL SHALL BE AS SPECIFIED IN THE CONSTRUCTION SPECIFICATIONS.

AFTER COMPLETE FABRICATION, EACH STEEL SECTION SHALL BE HOT DIP GALVANIZED ACCORDING TO THE REQUIREMENTS OF ASTM SPECIFICATION A123, AS MODIFIED BY THE CONSTRUCTION SPECIFICATIONS. A SINGLE DIP GALVANIZING PROCESS IS PREFERRED IF SIZE PERMITS.

II. ALUMINUM

ALUMINUM SHALL CONFORM TO THE ASTM SPECIFICATIONS AND ALLOYS LISTED BELOW:

APPLICATION	ASTM SPECIFICATION	ASTM ALLOY
ROLLED OR EXTRUDED SHAPES	B308/B308M	6061 - T6
PLATES	B209M	6061 - T6
DRAWN SEAMLESS TUBES	B210M	6061 - T6
EXTRUDED TUBES	B221M	6061 - T6

WELDING OF ALUMINUM SHALL BE AS SPECIFIED IN THE CONSTRUCTION SPECIFICATIONS.
THE SIGN PANEL SHALL BE INSTALLED LEVEL. THE CONTRACTOR SHALL FIELD DRILL THE SIGN SUPPORTS AS REQUIRED TO ACHIEVE THIS.

III. REINFORCEMENT STEEL

ALL REINFORCEMENT STEEL SHALL BE ASTM A615/A615M, GRADE 420.

IV. CONCRETE

ALL CONCRETE SHALL BE "CONCRETE IN STRUCTURES, FOOTINGS", UNLESS OTHERWISE SPECIFIED BY THE DESIGNER.

NOTE: ALL DIMENSIONS SHOWN ON THIS SHEET ARE IN METRIC UNITS.

INDEX OF DRAWINGS

DRG NO.	DESCRIPTION
OH-D1	GENERAL NOTES, PLAN AND ELEVATIONS
OH-D2	SCHEDULE OF STRUCTURES
OH-D3	SCHEDULE OF FOUNDATIONS AND MISCELANEOUS DETAILS
OH-D4	FOUNDATION DETAILS
OH-D5	STEEL TRUSS DETAILS - SHEET 1
OH-D6	STEEL TRUSS DETAILS - SHEET 2
OH-D7	STEEL TOWER DETAILS
OH-D8	TOWER SHAFT BASE AND TRUSS SEAT DETAILS
OH-D9	MAINTENANCE WALKWAY DETAILS
OH-D10	TYPICAL ELECTRICAL DETAILS

STATE	FEDERAL PROJECT NO.
N.J.	

SIGN STRUCTURE DRG. OH-D1

NEW JERSEY DEPARTMENT OF TRANSPORTATION
BUREAU OF STRUCTURAL ENGINEERING

OVERHEAD SIGN SUPPORT STRUCTURES
GENERAL NOTES, PLAN AND ELEVATIONS

ROUTE: SECTION:

SCALE : NONE

BRIDGE
SHEET NO. OF

BRC000.DG ORIGINAL SHEET

OVERHEAD SIGN SUPPORTS (STEEL TRUSSES AND STEEL TOWERS)

SIGN SUPPORTS		ELEVATIONS				TRUSSES							TOWERS			
STRUCTURE No.	STATION	℄ TRUSS	BOT OF BASE PLATE LEFT	BOT OF BASE PLATE RIGHT	SPAN LENGTH (M)	A x B (M)	CHORDS O.D.xTHICK (MM)	DIAGONALS O.D.xTHICK (MM)	STRUTS O.D.xTHICK (MM)	END STRUTS O.D.xTHICK (MM)	No. OF TRUSS UNITS	CAMBER (MM)	D (M)	SHAFTS O.D.xTHICK (MM)	DIAGONALS O.D.xTHICK (MM)	STRUTS O.D.xTHICK (MM)

NOTES:

1. ALL ELEVATIONS SHALL BE VERIFIED IN THE FIELD PRIOR TO FABRICATION AND CONSTRUCTION.
2. LEFT AND RIGHT TOWERS ARE DEFINED LOOKING UPSTATION.
3. THE NUMBER OF TRUSS UNITS SHOWN IN THE SCHEDULE OF STRUCTURES IS OPTIONAL. ALTERNATES MAY BE SUBMITTED TO THE ENGINEER FOR APPROVAL.
4. THE DIAGONALS ON EACH FACE OF THE TRUSS MUST FORM CONTINUOUS TRUSSING BETWEEN TOWERS (SEE TYPICAL PLAN AND ELEVATION VIEWS ON SIGN STRUCTURE DRG. OH-D1).

SUMMARY OF QUANTITIES

PAY ITEM NO.	STADARD ITEM NO.	DESCRIPTION	UNIT	CONTRACT QUANTITY

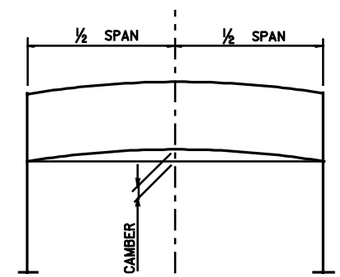

CAMBER REQUIRED

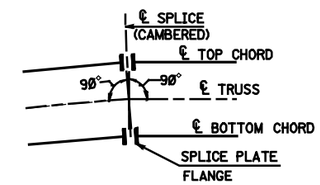

CAMBER DETAIL

CAMBER NOTE:

CAMBER SHALL BE OBTAINED BY INCREASING THE TOP CHORD LENGTH AND DECREASING THE BOTTOM CHORD LENGTH AS SHOWN. CHORD SPLICE FLANGES SHALL BE SKEWED TO THE ANGLE SO OBTAINED BEFORE WELDING TO CHORDS. NO FORCE SHALL BE APPLIED IN PROVIDING CAMBER. AN ALTRNATE METHOD OF OBTAINING CAMBER MAY BE USED AS APPROVED BY THE ENGINEER.

NOTE: ALL DIMENSIONS SHOWN ON THIS SHEET ARE IN METRIC UNITS.

SIGN STRUCTURE DRG. OH-D2

NEW JERSEY DEPARTMENT OF TRANSPORTATION
BUREAU OF STRUCTURAL ENGINEERING

OVERHEAD SIGN SUPPORT STRUCTURES
SCHEDULE OF STRUCTURES

ROUTE: SECTION:

SCALE : NONE

BRIDGE SHEET NO. OF

CONTROL SECTION		JOB NO.	
DES. BY		CHK. BY	
DWN. BY			
EST. BY		CHK. BY	
SPECS. BY			
IN CHARGE OF			

RECORD OF ORIGINAL SHEET

OVERHEAD SIGN SUPPORTS - SCHEDULE OF FOUNDATIONS

STRUCTURE No.	FOOTINGS												PEDESTALS (SEE NOTE 7)									BARRIER PEDESTALS																							
	SIZE FLxFW (M)	VOLUME				No. OF PILES IN ROW		PILE LGTH (M)	REINFORCING BARS No. & SIZE				WT OF RE-BARS (KG)	SIZE PD (MM)	PED HT (M)	VOL OF CONC (C.M.)	REINFORCING BARS TYPE "P-1"			REINFORCING BARS TYPE "P-2"			WEIGHT OF COR. PROTE-CTED REBARS (KG)	SIZE BWT (MM)	BAR-RIER HT (M)	BAR-RIER LGTH (M)	VOL OF CONC (C.M.)	REINFORCING BARS TYPE "B-1"			TYPE "B-2"				TYPE "B-3"				TYPE "B-4"				WEIGHT OF COR. PROTE-CTED REBARS (KG)	TOTAL WEIGHT OF COR. PROTE-CTED REBARS (KG)	TOTAL WEIGHT OF ALL REBAR TYPES (KG)	TOTAL VOLUME OF CONC (C.M.)
		CONCRETE		EXCAVATION													No. & SIZE	A (MM)	LGTH (MM)	No. & SIZE	D (MM)	LGTH (MM)						No. & SIZE	A (MM)	LGTH (MM)	No. & SIZE	B (MM)	C (MM)	LGTH (MM)	No. & SIZE	E (MM)	F (MM)	LGTH (MM)	No. & SIZE	E (MM)	G (MM)	LGTH (MM)				
		WITH PILES (C.M.)	W/O PILES (C.M.)	WITH PILES (C.M.)	W/O PILES (C.M.)	"X"	"Y"		FLB	FWB	FLT	FWT																																	

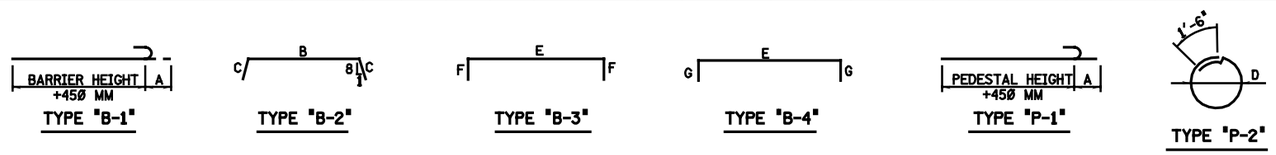

REBAR SHAPES

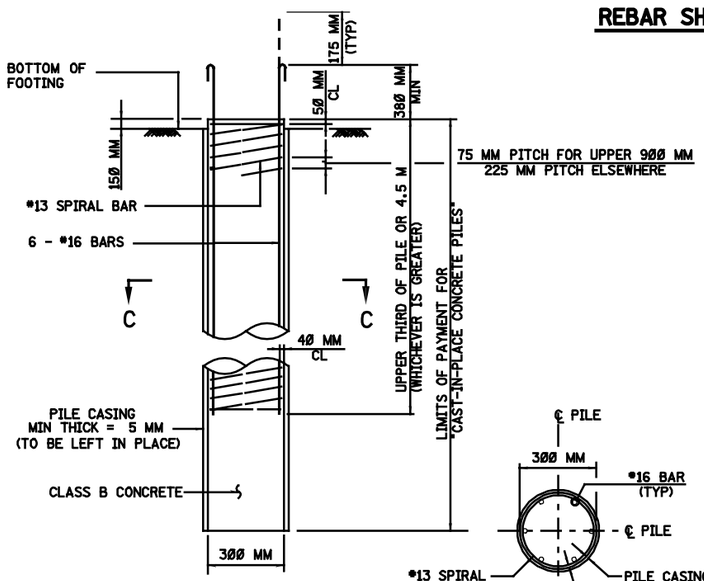

ELEVATION

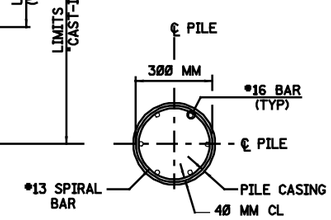

SECTION C-C

CAST-IN-PLACE CONCRETE PILE

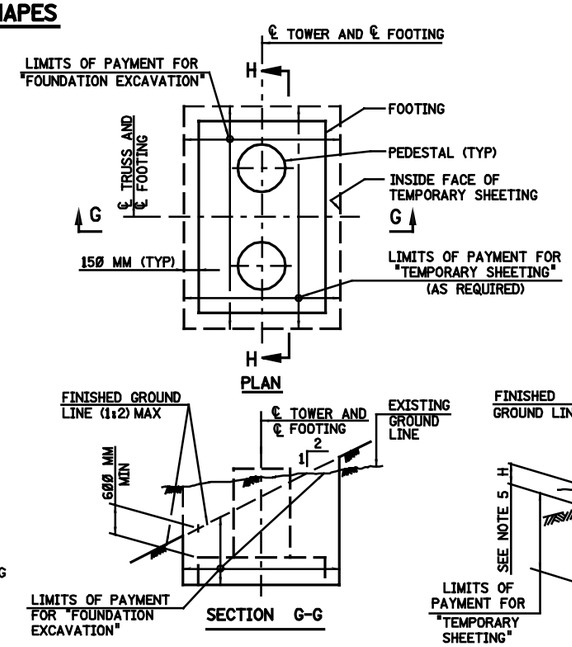

TEMPORARY SHEETING AND EXCAVATION DETAILS

NOTES:

1. BEARING PILES SHALL BE CAST-IN-PLACE CONCRETE PILES. ALL PILES SHALL BE 300 MM IN DIAMETER OR EQUIVALENT AND SHALL HAVE A MINIMUM BEARING CAPACITY OF 214 KN. THE NUMBER AND SPACING OF PILES SHALL BE AS INDICATED ON SIGN STRUCTURE DRG. OH-D4.
2. PILE DESIGN SHALL CONFORM TO AASHTO SPECIFICATIONS FOR THE SEISMIC DESIGN OF HIGHWAY BRIDGES, SEISMIC PERFORMANCE CATEGORY B, SUBSECTION 6.3.1(C)
3. APPROVED METAL SPACERS SHALL BE ATTACHED TO TOP AND BOTTOM SPIRALS TO ENSURE THAT THE REQUIRED CLEAR DISTANCE TO THE CASING IS MAINTAINED.
4. NO CONCRETE SHALL BE PLACED IN CAST-IN-PLACE PILES UNTIL AFTER ALL PILE CASINGS FOR THE FOOTING HAVE BEEN DRIVEN.
5. WHEN TEMPORARY SHEETING IS REQUIRED, H IS 1.0 M WHEN ADJACENT TO PEDESTRIAN OR VEHICULAR TRAFFIC AND 0.3 M MINIMUM FOR ALL OTHER CONDITIONS.
6. PAYMENT LIMITS FOR TEMPORARY SHEETING SHALL BE MEASURED FROM THE FINISHED GRADE LINE OR FROM THE EXISTING GROUND LINE, WHICHEVER IS LOWER.
7. QUANTITIES SHOWN ARE FOR BOTH PEDESTALS.

NOTE: ALL DIMENSIONS SHOWN ON THIS SHEET ARE IN METRIC UNITS.

SIGN STRUCTURE DRG. OH-D3

NEW JERSEY DEPARTMENT OF TRANSPORTATION
BUREAU OF STRUCTURAL ENGINEERING

OVERHEAD SIGN SUPPORT STRUCTURES SCHEDULE OF FOUNDATIONS AND MISCELLANEOUS DETAILS

ROUTE: SECTION:

SCALE : NONE

BRIDGE SHEET NO. OF

CONTROL SECTION		JOB NO.	
DES. BY		CHK. BY	
DWN. BY			
EST. BY		CHK. BY	
SPECS. BY			

IN CHARGE OF

BRC001.DGN ORIGINAL SHEET

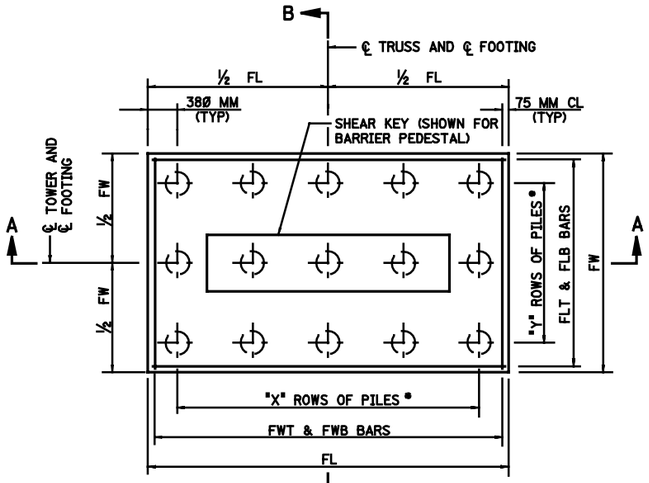

PLAN

• PILES REQUIRED ONLY IF SCHEDULED AS A CONTRACT PAY ITEM

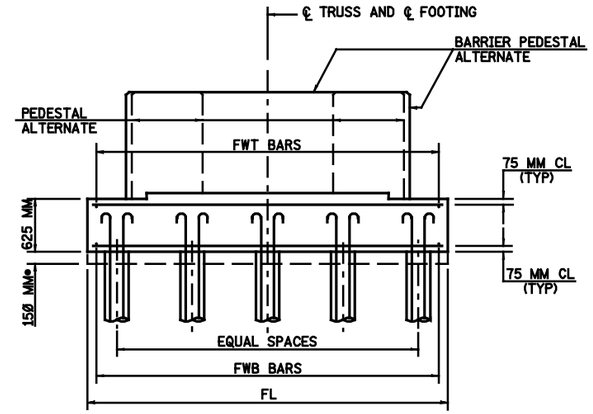

SECTION A-A

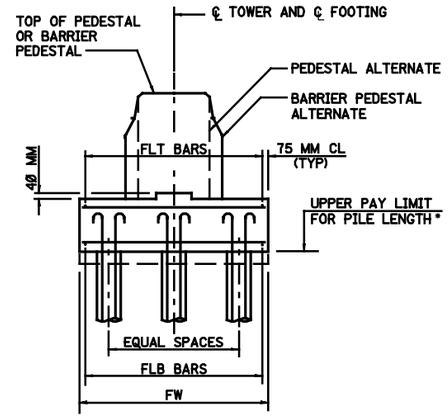

SECTION B-B

FOOTING

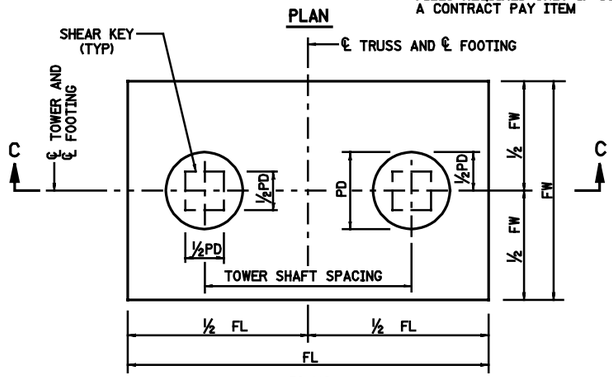

PLAN

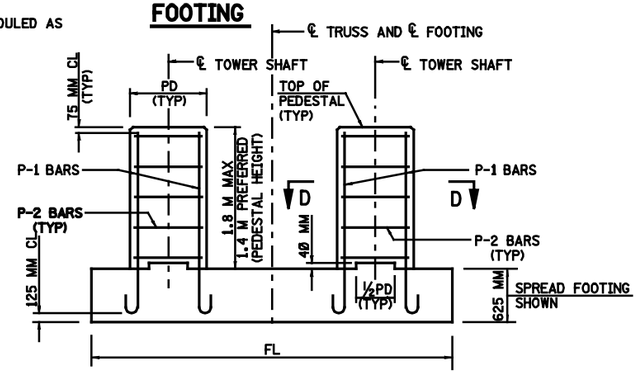

SECTION C-C

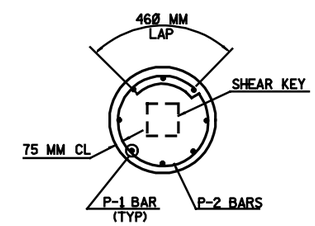

SECTION D-D

PEDESTAL

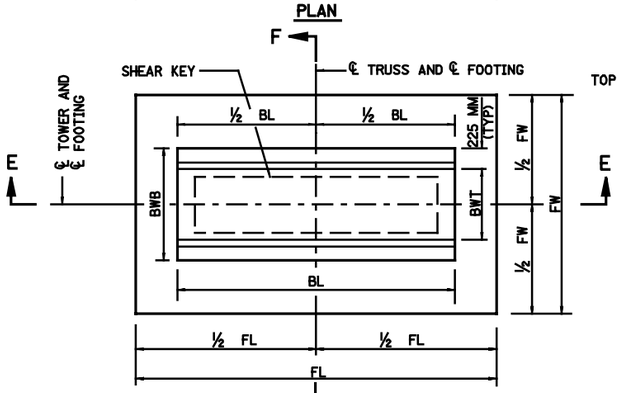

PLAN

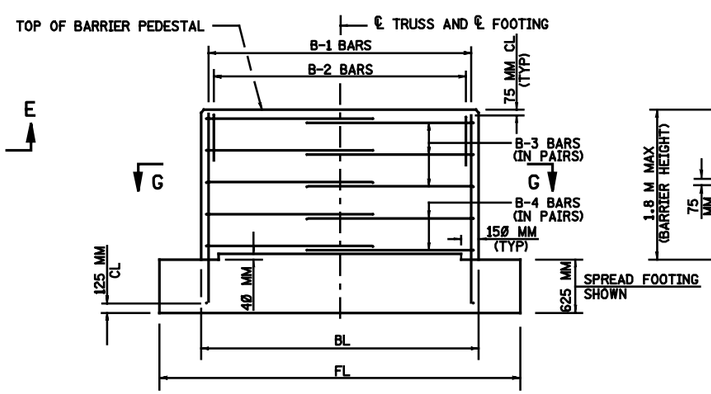

SECTION E-E

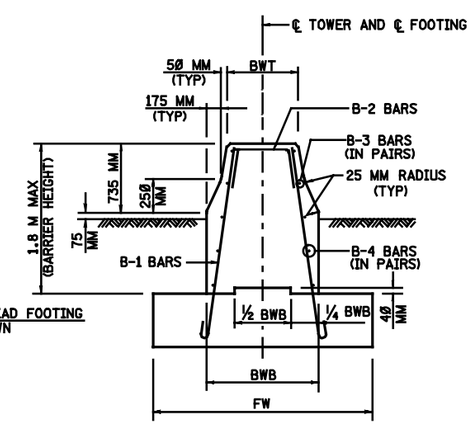

SECTION F-F

BARRIER PEDESTAL

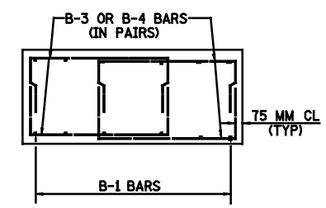

SECTION G-G

NOTES:

1. ALL REINFORCEMENT IN PEDESTALS OR BARRIER PEDESTALS SHALL BE CORROSION PROTECTED.
2. EXPOSED CONCRETE EDGES SHALL BE CHAMFERED 25 X 25 MM UNLESS NOTED OTHERWISE.
3. BARS SHALL NOT BE SPLICED EXCEPT AS PROVIDED ON THIS DRAWING OR AUTHORIZED BY THE ENGINEER. WHEN SPLICING IS APPROVED, THE REINFORCEMENT BARS SHALL BE LAPPED FOR A LENGTH OF AT LEAST 36 DIAMETERS AND SHALL BE SECURELY WIRED TOGETHER.
4. FOR DETAILS OF CAST-IN-PLACE CONCRETE PILES, SEE SIGN STRUCTURE DRG. OH-D3.

NOTE: ALL DIMENSIONS SHOWN ON THIS SHEET ARE IN METRIC UNITS.

SIGN STRUCTURE DRG. OH-D4

NEW JERSEY DEPARTMENT OF TRANSPORTATION
BUREAU OF STRUCTURAL ENGINEERING

OVERHEAD SIGN SUPPORT STRUCTURES FOUNDATION DETAILS

ROUTE: SECTION:

SCALE : NONE

BRIDGE SHEET NO. OF

RECORD AS ORIGINAL SHEET

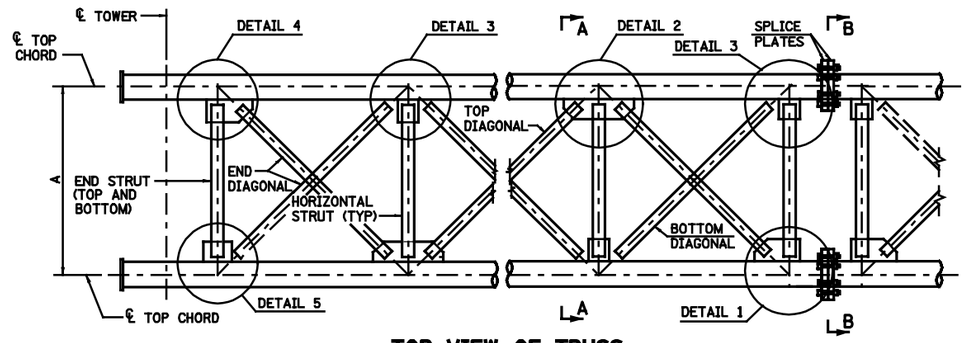

TOP VIEW OF TRUSS

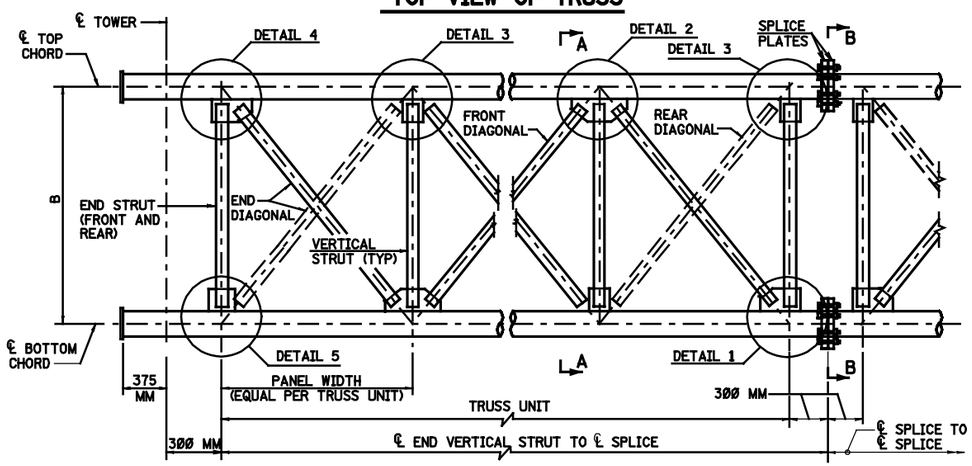

FRONT VIEW OF TRUSS

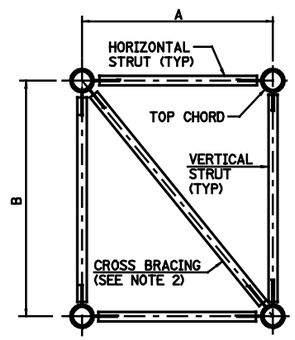

SECTION A-A

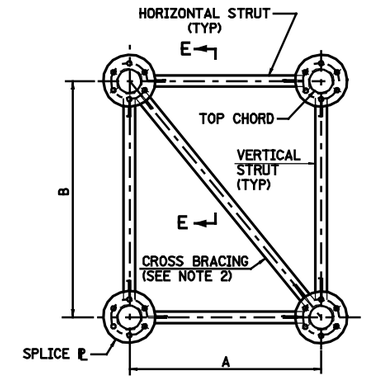

SECTION B-B

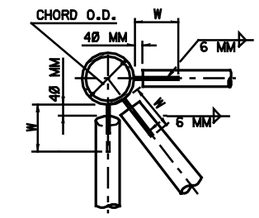

SECTION C-C

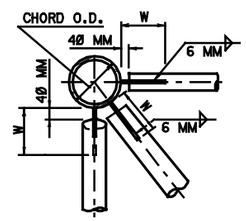

SECTION D-D

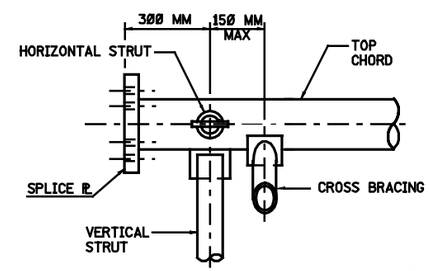

SECTION E-E

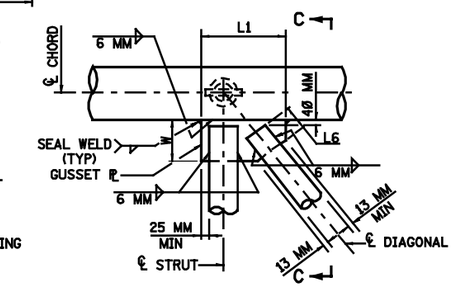

DETAIL 1

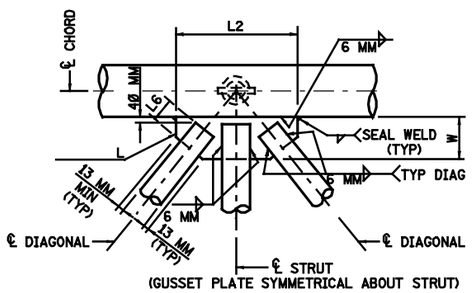

DETAIL 2

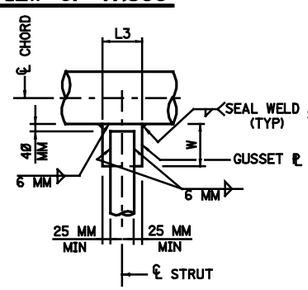

DETAIL 3

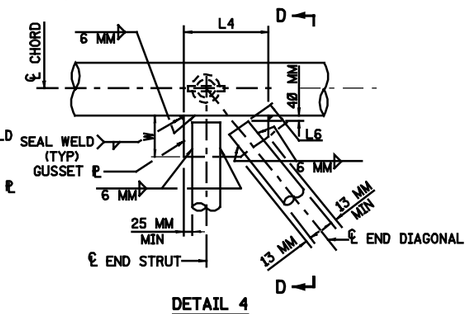

DETAIL 4
(END 'K' GUSSET)
(SEE COPE HOLE DETAIL)

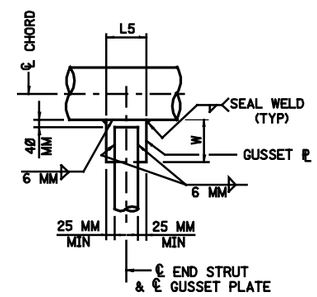

DETAIL 5
(END 'T' GUSSET)
(SEE COPE HOLE DETAIL)

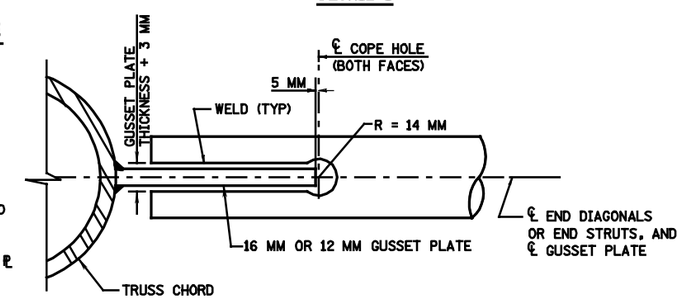

COPE HOLE DETAIL

NOTE:

COPE HOLES TO BE PROVIDED AT BOTH ENDS AND BOTH FACES OF ALL END STRUTS AND END DIAGONALS (8 STRUTS TOTAL, 8 DIAGONALS TOTAL).

TRUSS GUSSET PLATE DIMENSIONS

CHORD O.D. (MM)	PLATE THICKNESS (MM)	PLATE WIDTH W (MM)	"K" GUSSET MIN. L1 (MM)	"K-T" GUSSET MIN. L2 (MM)	"T" GUSSET MIN. L3 (MM)	"END - K" GUSSET MIN. L4 (MM)	"END - T" GUSSET MIN. L5 (MM)	WELD LENGTH MIN. L6 (MM)
88.9	12	165	250	360	140	250	140	90
101.6	12	165	250	360	140	250	140	90
114.3	12	165	250	360	140	250	140	90
141.3	12	165	250	360	140	250	140	90
168.3	16	175	260	380	140	300	140	105
219.1	16	190	285	425	140	310	140	120
273.1	16	200	310	475	140	410	140	130
323.9	16	215	330	520	140	410	140	140
355.6	16	215	345	545	140	420	140	140

NOTES:

1. THE SIZE OF CROSS BRACING MEMBERS SHALL BE THE SAME AS THAT OF THE DIAGONALS. CROSS BRACING SHALL BE LOCATED AT THE ENDS OF EACH TRUSS UNIT AND SPACED AT EVERY THIRD PANEL MAXIMUM, ALTERNATING IN DIRECTION.
2. FOR CHORD CAP DETAILS, SEE SIGN STRUCTURE DRG. OH-D8.
3. FOR CHORD SPLICES, SEE SIGN STRUCTURE DRG. OH-D6.
4. THE LENGTHS SHOWN IN THE TABLE FOR THE TRUSS GUSSET PLATE ARE ABSOLUTE MINIMUM DIMENSIONS. THE ACTUAL DIMENSIONS REQUIRED WILL DEPEND ON THE PANEL DEPTH AND WIDTH USED.

NOTE: ALL DIMENSIONS SHOWN ON THIS SHEET ARE IN METRIC UNITS.

SIGN STRUCTURE DRG. OH-D5

NEW JERSEY DEPARTMENT OF TRANSPORTATION
BUREAU OF STRUCTURAL ENGINEERING

OVERHEAD SIGN SUPPORT STRUCTURES
STEEL TRUSS DETAILS - SHEET 1

ROUTE: SECTION:

SCALE : NONE

BRIDGE SHEET NO. OF

RECORD OF ORIGINAL SHEET

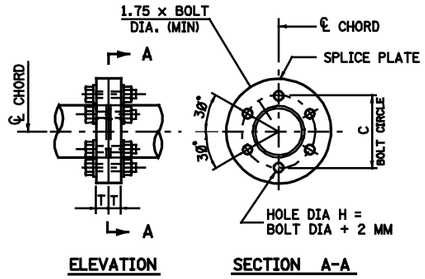

SIX-BOLT CHORD SPLICE DETAIL

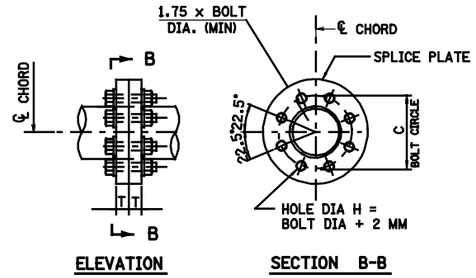

EIGHT-BOLT CHORD SPLICE DETAIL

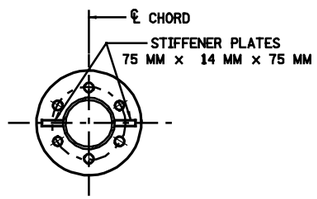

CHORD SPLICE WITH STIFFENERS

(SIX-BOLT SPLICE SHOWN)

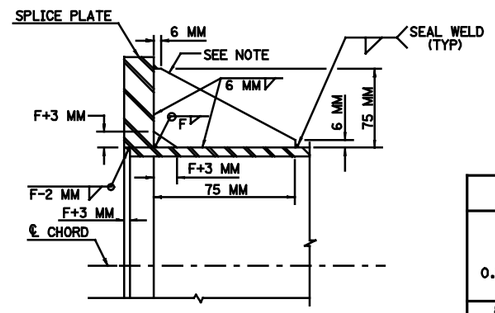

CHORD SPLICE WELD DETAIL

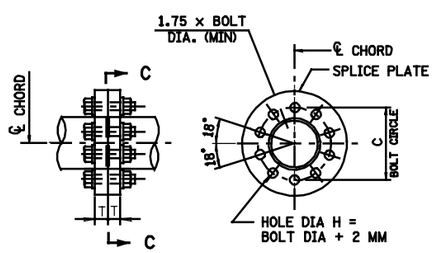

TEN-BOLT CHORD SPLICE DETAIL

TRUSS CHORD SPLICES

CHORD O.D.xTHICK (MM)	SPLICE PLATES THICKNESS T (MM)	SPLICE PLATES WELD SIZE F (MM)	SPLICE BOLTS No. OF BOLTS	SPLICE BOLTS BOLT CIRCLE C (MM)	SPLICE BOLTS DIAMETER (MM)	SPLICE BOLTS BOLT TENSION (KN)
88.9x5.5	38	6	6	156	20	124.6
101.6x5.7	38	6	6	168	20	124.6
114.3x6.0	38	6	6	181	20	124.6
141.3x6.6	38	7	6	230	24	226.9
168.3x7.1	50	7	8	257	24	226.9
219.1x8.2	50	8	8	330	30	315.8
273.1x9.3	50	9	8	406	36	458.2
323.9x9.5	50	10	10	457	36	458.2
355.6x9.5	50	10	10	489	36	458.2

NOTES:

1. A325M SPLICE BOLTS SHALL BE HEAVY HEXAGON TYPE AND SHALL BE FURNISHED WITH HEAVY HEXAGON NUTS AND WASHERS.
2. THE THREADED PORTION OF THE SPLICE BOLTS SHALL BE EXCLUDED FROM THE SHEAR PLANE OF THE SPLICE.
3. THE PROVISIONS OF SUBSECTION 509.09 OF THE NJDOT STANDARD SPECIFICATIONS SHALL BE FOLLOWED IN FURNISHING THE REQUIRED CHORD SPLICE ASSEMBLY.
4. REFER TO SUBSECTION 509.08 OF THE NJDOT STANDARD SPECIFICATIONS FOR SPLICE BOLT TIGHTENING PROCEDURES. WHEN CALIBRATED WRENCHES ARE USED FOR BOLT INSTALLATION, THEY SHALL BE SET TO PROVIDE THE TENSION THAT IS SPECIFIED IN THE TABLE ABOVE.
5. CHORD SPLICE STIFFENER PLATES ARE TO BE USED FOR CHORD SPLICES LOCATED AT MIDSPAN (CENTERLINE) OF TRUSS ONLY. (SEE CHORD SPLICE ASSEMBLY WELD DETAIL FOR MORE INFORMATION).
6. CHORD SPLICE STIFFENER PLATES ARE SHOWN HORIZONTAL. STIFFENER PLATES MAY BE REPOSITIONED, AS NECESSARY, TO PROVIDE SUFFICIENT CLEARANCE FOR BOLTING OF THE SPLICE, BUT THEY SHALL ALWAYS BE POSITIONED OPPOSITE TO EACH OTHER AS SHOWN.

THE FOLLOWING TABLES ARE PROVIDED TO FACILITATE FABRICATION OF SIGN SUPPORT STRUCTURES AND TO AID THE DESIGNER IN CHECKING SHOP DRAWING SUBMISSION.

THE CUSTOMARY U.S. SIZES SHOWN IN THESE TABLES ARE NOT NECESSARILY EQUIVALENT TO THE METRIC SIZES BUT MAY BE USED AS ACCEPTABLE SUBSTITUTIONS, IF MATERIAL WITH CUSTOMARY U.S. SIZES IS PROVIDED BY THE FABRICATOR, ADJUSTMENTS TO RELATED DIMENSIONS WILL BE REQUIRED.

STEEL PLATE THICKNESS

METRIC (MM)	CUSTOMARY U.S. UNITS (INCHES)
3	1/8
4	1/4
6	1/4
8	3/8
10	3/8
12	1/2
14	5/8
16	5/8
18	3/4
20	3/4
22	7/8
24	1
26	1
28	1 1/8
30	1 1/4
32	1 1/4
34	1 3/8
36	1 1/2
38	1 1/2
40	1 5/8
45	1 3/4
50	2
55	2 1/4
60	2 1/2
70	2 3/4
80	3 1/4

BOLT DIAMETER

METRIC (MM)	CUSTOMARY U.S. UNITS (INCHES)
M6	1/4
M10	3/8
M12	1/2
M16	5/8
M20	3/4
M22	7/8
M24	1
M27	1 1/8
M30	1 1/4
M36	1 1/2
M45	1 3/4
M50	2
M55	2 1/4
M60	2 1/2
M65	2 3/4
M70	2 3/4
M75	3
M80	3 1/4

WELD SIZE

METRIC (MM)	CUSTOMARY U.S. UNITS (INCHES)
3	1/8
4	3/16
5	3/16
6	1/4
7	5/16
8	5/16
9	3/8
10	3/8
12	1/2
14	9/16
16	5/8
18	3/4
20	13/16
22	7/8
24	1
25	1

REINFORCEMENT BAR SIZE

METRIC BAR DESIGNATION	INCH-POUND BAR SIZE DESIGNATION
#10	#3
#13	#4
#16	#5
#19	#6
#22	#7
#25	#8
#29	#9
#32	#10
#36	#11
#43	#14
#57	#18

NOTE: SEE SECTION 26 OF DESIGN MANUAL - BRIDGES AND STRUCTURES FOR BAR DESIGNATIONS.

NOTE: ALL DIMENSIONS SHOWN ON THIS SHEET ARE IN METRIC UNITS.

SIGN STRUCTURE DRG. OH-D6

NEW JERSEY DEPARTMENT OF TRANSPORTATION
BUREAU OF STRUCTURAL ENGINEERING

OVERHEAD SIGN SUPPORT STRUCTURES
STEEL TRUSS DETAILS - SHEET 2

ROUTE: SECTION:

SCALE : NONE

BRIDGE
SHEET NO. OF

RDCADD 06 ORIGINAL SHEET

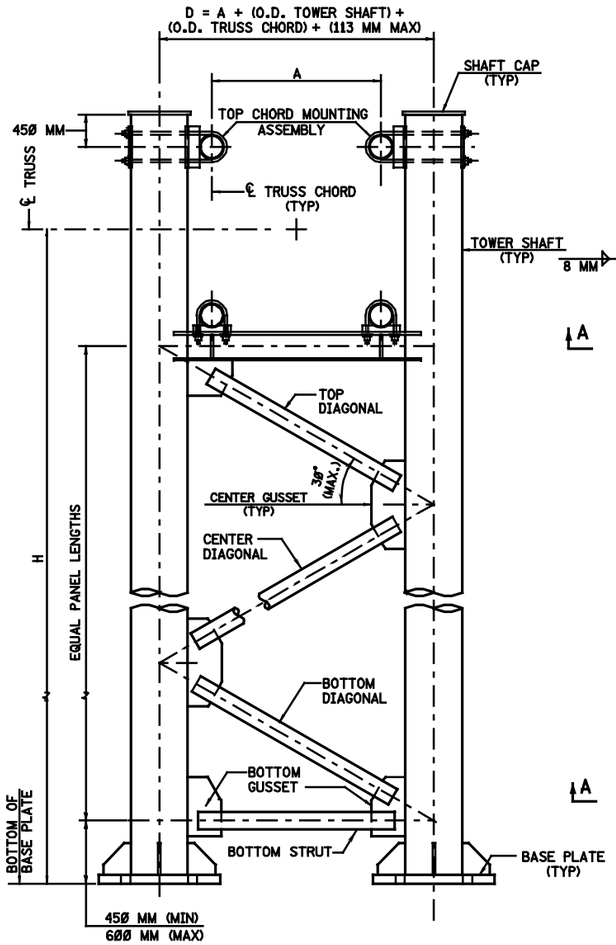

TOWER ELEVATION

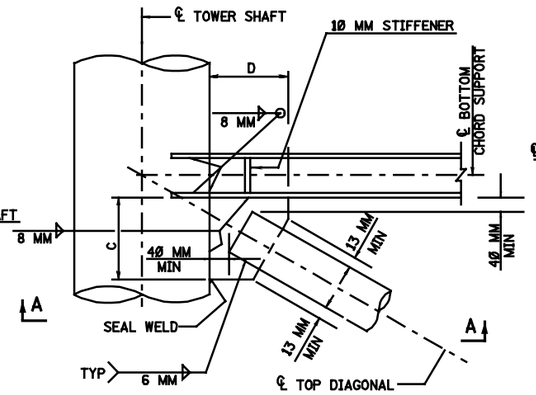

TOP GUSSET DETAIL

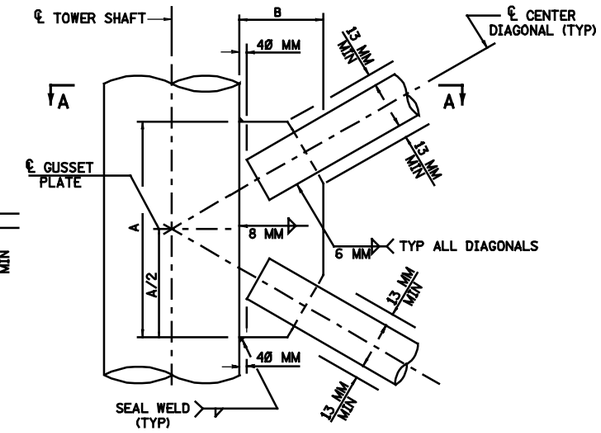

CENTER GUSSET DETAIL

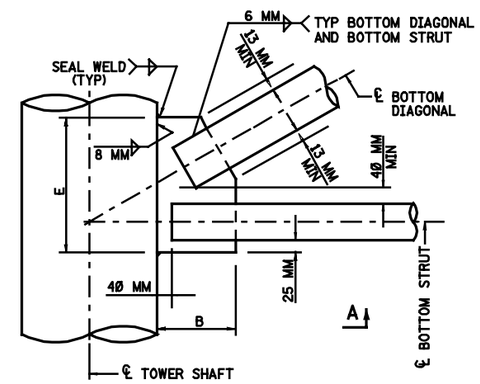

BOTTOM GUSSET DETAIL

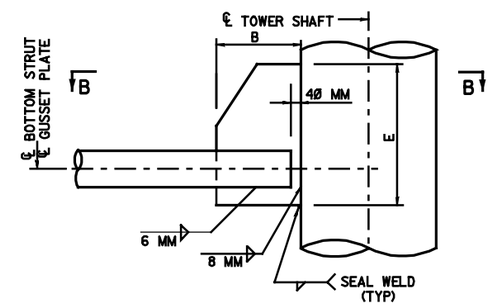

BOTTOM GUSSET DETAIL

22 MM GUSSET PLATES					
TOWER SHAFT O.D. (MM)	A (MM)	B (MM)	C (MM)	D (MM)	E (MM)
273.1	450	175	160	310	330
323.9	495	185	175	325	340
355.6	585	230	240	405	445
406.4	650	260	290	420	445
457.2	710	280	290	450	485
508.0	750	280	290	395	485
558.8	775	280	315	380	485

NOTES:

1. FOR DETAILS OF THE SADDLE BLOCK, SEE SIGN STRUCTURE DRG. OH-D8.
2. FOR TOWER SHAFT CAP DETAILS, SEE SIGN STRUCTURE DRG. OH-D8.
3. FOR DETAILS OF TOP AND BOTTOM CHORD MOUNTING ASSEMBLIES, SEE SIGN STRUCTURE DRG. OH-D8.
4. COPE HOLES SHALL BE PROVIDED ON BOTH FACES OF THE PIPE.

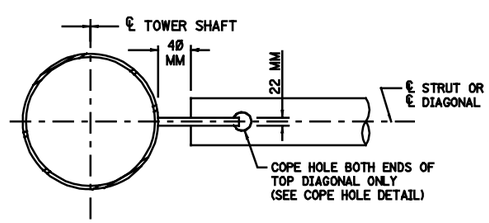

SECTION A-A
(SECTION B-B OPPOSITE HAND)

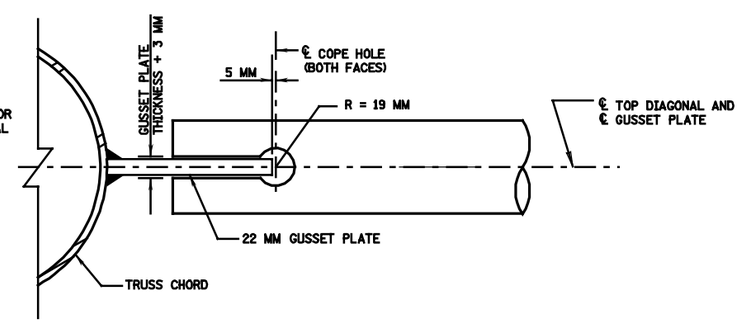

COPE HOLE DETAIL

NOTE: ALL DIMENSIONS SHOWN ON THIS SHEET ARE IN METRIC UNITS.

SIGN STRUCTURE DRG. OH-D7

NEW JERSEY DEPARTMENT OF TRANSPORTATION
BUREAU OF STRUCTURAL ENGINEERING

OVERHEAD SIGN SUPPORT STRUCTURES
STEEL TOWER DETAILS

ROUTE: SECTION:

SCALE : NONE

BRIDGE
SHEET NO. OF

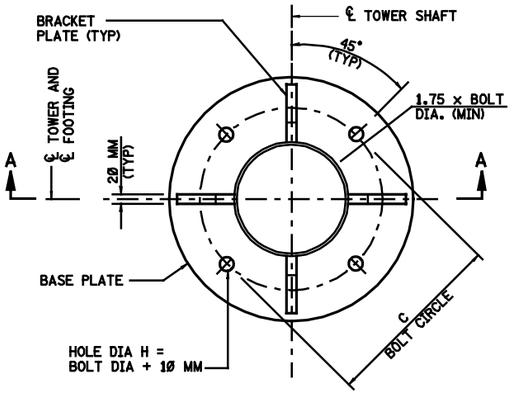

PLAN

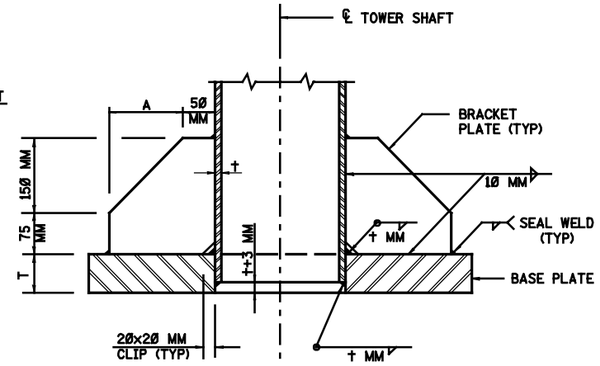

SECTION A-A

TOWER SHAFT BASE DETAIL

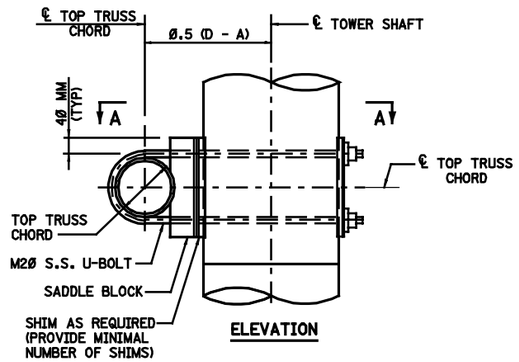

ELEVATION

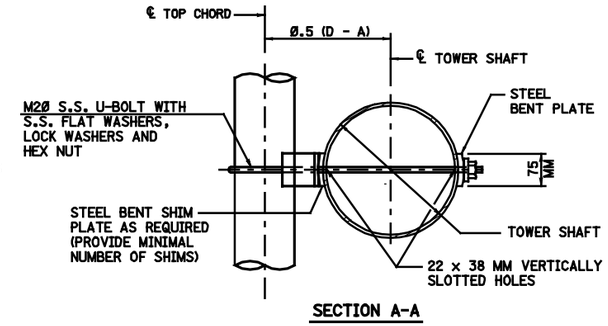

SECTION A-A

TOP CHORD MOUNTING ASSEMBLY DETAIL

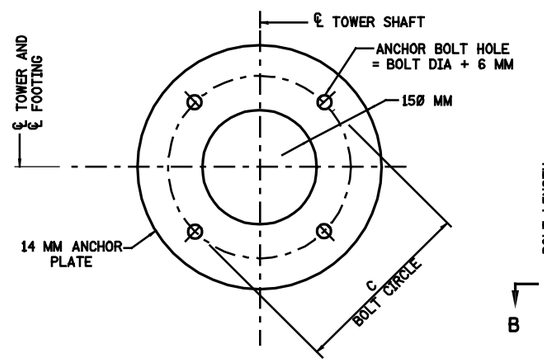

ANCHOR PLATE DETAIL

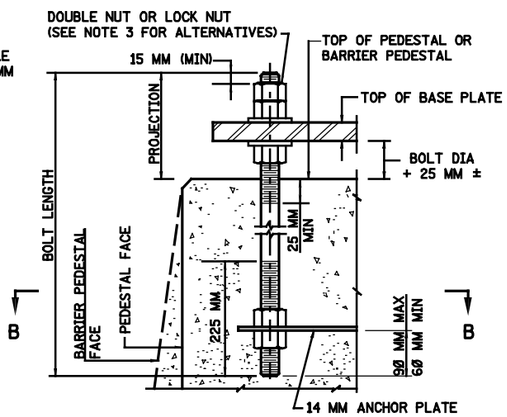

ANCHOR BOLT DETAIL

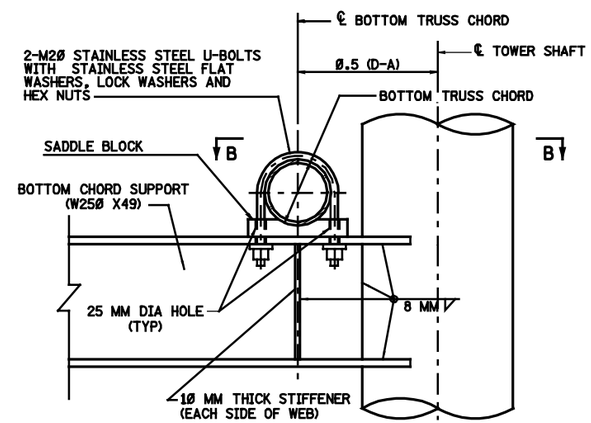

ELEVATION

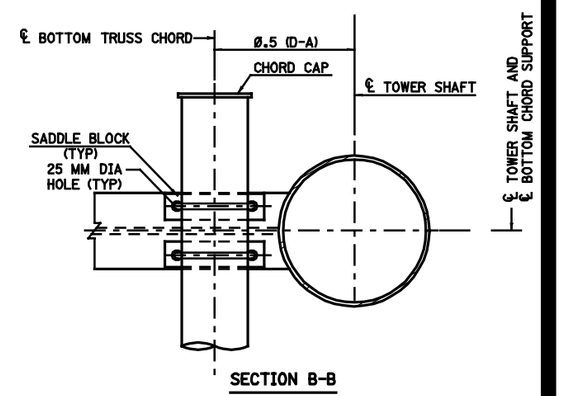

SECTION B-B

BOTTOM CHORD MOUNTING ASSEMBLY DETAIL

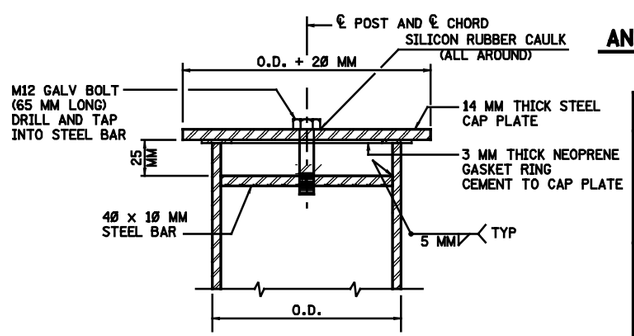

STEEL POST OR CHORD CAP DETAIL

NOTE: ALTERNATE CAP DETAILS MAY BE SUBMITTED TO THE ENGINEER FOR APPROVAL.

TOWER SHAFT BASE ASSEMBLY

TOWER SHAFT O.D.xTHICK (MM)	BASE PLATE	ANCHOR BOLTS				BRACKET PLATES
	THICKNESS T (MM)	BOLT CIRCLE C (MM)	SIZE DIAxLGTH (MM)	BOLT TENSION (KN)	PROJ• (MM)	A (MM)
273.1x9.3	50	437	45x1230	343.1	240	60
323.9x9.5	55	523	50x1360	451.5	260	85
355.6x9.5	55	542	70x1710	722.4	300	100
355.6x12.7	60	542	70x1720	722.4	310	100
406.4x9.5	60	643	70x1720	722.4	310	125
406.4x12.7	70	643	70x1730	722.4	320	125
457.2x9.5	70	730	70x1850	890.4	330	150
457.2x12.7	70	730	70x1850	890.4	330	150
508.0x12.7	80	817	75x1980	1078.2	360	175
558.8x12.7	80	918	75x1980	1078.2	360	200

• PROJECTION LENGTH SHOWN IS BASED ON USING DOUBLE NUTS.

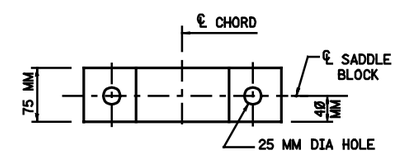

PLAN

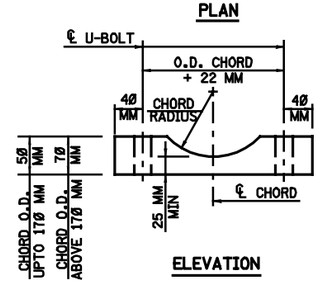

ELEVATION

SADDLE BLOCK DETAIL

NOTES:

1. ANCHOR BOLTS SHALL BE PROVIDED WITH HEAVY HEXAGON NUTS AND TWO WASHERS AS SHOWN ON THE ANCHOR BOLT DETAIL.
2. ANCHOR BOLTS SHALL BE GALVANIZED AFTER THREADING.
3. REFER TO SUBSECTION 509.08 OF THE NJDOT STANDARD SPECIFICATIONS FOR ANCHOR BOLT TIGHTENING PROCEDURES. WHEN CALIBRATED WRENCHES ARE USED FOR BOLT INSTALLATION, THEY SHALL BE SET TO PROVIDE THE TENSION THAT IS SPECIFIED IN THE TABLE ABOVE.
4. M20 STAINLESS STEEL U-BOLTS SHALL HAVE THE THREADS EXCLUDED FROM THE SHEAR PLANE BETWEEN THE SADDLE BLOCK AND BOTTOM CHORD SUPPORT.

NOTE: ALL DIMENSIONS SHOWN ON THIS SHEET ARE IN METRIC UNITS.

SIGN STRUCTURE DRG. OH-D8

NEW JERSEY DEPARTMENT OF TRANSPORTATION
BUREAU OF STRUCTURAL ENGINEERING

OVERHEAD SIGN SUPPORT STRUCTURES
TOWER SHAFT BASE AND TRUSS SEAT DETAILS

ROUTE: SECTION:

SCALE : NONE

BRIDGE SHEET NO. OF

RECORD OF ORIGINAL SHEET

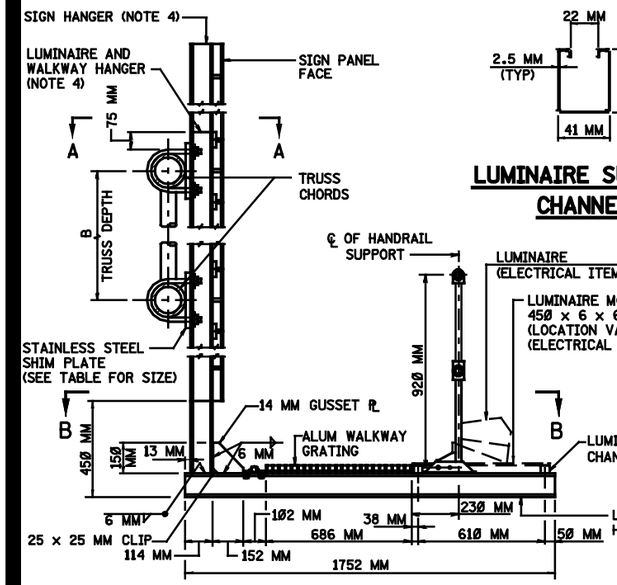

TYPICAL MAINTENANCE WALKWAY DETAIL

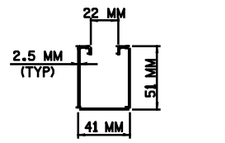

LUMINAIRE SUPPORT CHANNEL

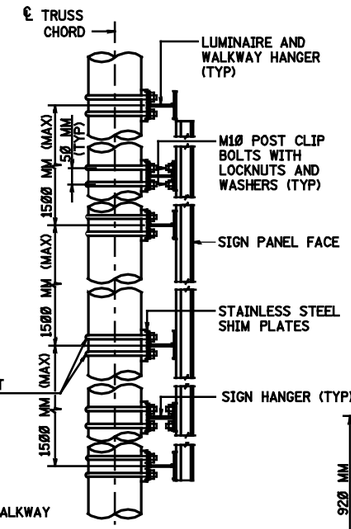

SECTION A-A

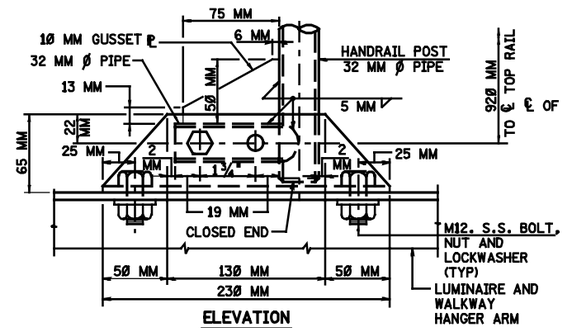

ELEVATION

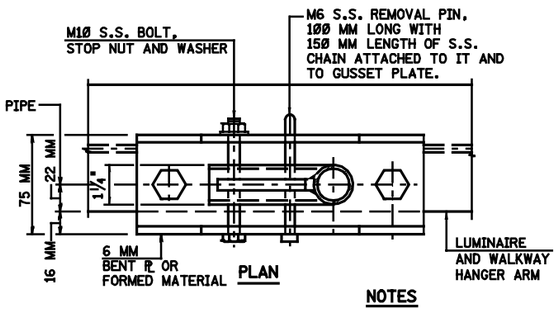

PLAN

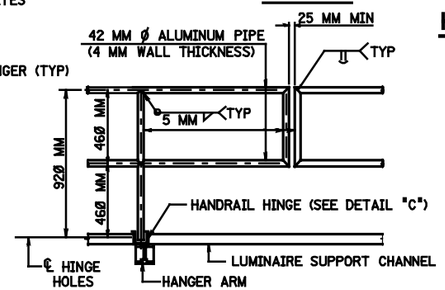

ELEVATION OF HANDRAIL

HANDRAIL HINGE DETAIL "C"

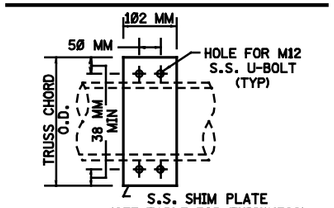

TRUSS CHORD O.D. (MM)	SHIM PACK THICKNESS* (MIN) (MM)
273.1	20
323.9	20
395.6	20

* FOR TRUSS CHORD SIZES NOT SHOWN, USE 6 MM MIN. SHIM PLATE THICKNESS (SEE NOTE 5)

NOTES

1. ALL MATERIAL SHALL BE ALUMINUM ALLOY 6061-T6 UNLESS OTHERWISE NOTED.
2. ALL SHIM PLATES, BOLTS, U-BOLTS, WASHERS AND NUTS SHALL BE STAINLESS STEEL CONFORMING TO ASTM SPECIFICATION A320/A320M GRADE B8, CLASS 1.
3. WELDING OF ALUMINUM SHALL BE AS SPECIFIED IN THE CONSTRUCTION SPECIFICATIONS.
4. ALUMINUM I-BEAM (DEPTH = 102 MM, WEB AND FLANGE THICKNESS = 6 MM, FLANGE WIDTH = 89 MM). SIGN HANGER SPACING DESIGNED FOR 4.6 M MAXIMUM SIGN PANEL HEIGHT.
5. THE THICKNESSES OF THE SHIM PLATES MAY BE MODIFIED TO AVOID INTERFERENCE BETWEEN THE CHORD SPLICE PLATES AND THE SIGN PANELS.
6. MAINTENANCE WALKWAY, RAILING AND LUMINAIRE SUPPORTS SHALL BE PROVIDED CONTINUOUSLY FOR THE ENTIRE SIGN DESIGN LENGTH UNLESS OTHERWISE SHOWN.
7. MINIMUM SECTION MODULUS OF ALUMINUM WALKWAY GRATING SHALL BE 72580 CU. MM. PER METER WIDTH. WALKWAY GRATING SHALL NOT CANTILEVER MORE THAN 300 MM BEYOND HANGER ARMS AT EACH END OF THE MAIN WALKWAY. WALKWAY GRATING SHALL BE CONTINUOUS OVER A MINIMUM OF TWO SPANS.
8. ALTERNATE PIPE FITTINGS FOR HANDRAIL MAY BE SUBMITTED TO THE ENGINEER FOR APPROVAL.
9. ALL PIPES FOR HANDRAIL SHALL BE 32 MM NOMINAL DIA. WITH 4 MM WALL THICKNESS.
10. MAXIMUM LENGTH OF HANDRAIL SECTION SHALL BE 3050 MM AND SHALL INCLUDE TWO POSTS.
11. ALTERNATE HANDRAIL HINGE DETAILS MAY BE SUBMITTED TO THE ENGINEER FOR APPROVAL.
12. LUMINAIRE AND WALKWAY HANGERS SHALL PROJECT 75 MM ABOVE THE TOP OF THE TOP CHORD AND SHALL NOT SUPPORT SIGN PANELS.
13. LENGTH OF SIGN HANGERS SHALL BE EQUAL TO THE SIGN PANEL HEIGHT.
14. SIGN HANGERS SHALL BE USED TO SUPPORT SIGN PANELS ONLY.
15. EXIT PANEL CONNECTION DETAIL SHOWN SHALL ALSO BE USED FOR THE ATTACHMENT OF NEW EXIT PANELS TO EXISTING SIGN PANELS.
16. SIGN PANELS SHALL NOT EXTEND MORE THAN 900 MM BEYOND THE LAST SIGN HANGER. MAINTENANCE WALKWAYS SHALL NOT EXTEND MORE THAN 300 MM BEYOND THE LAST WALKWAY HANGER.

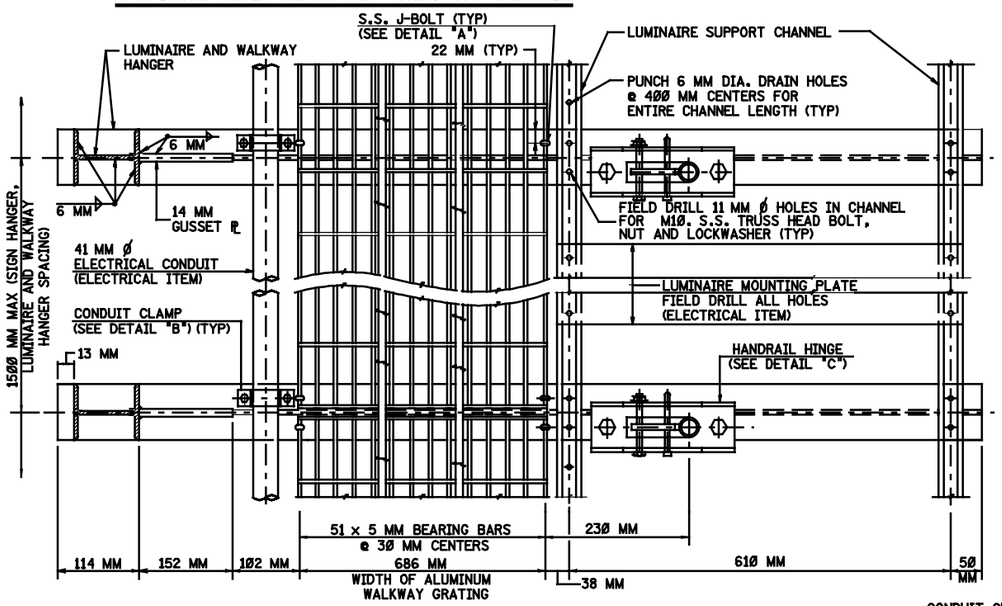

SECTION B-B

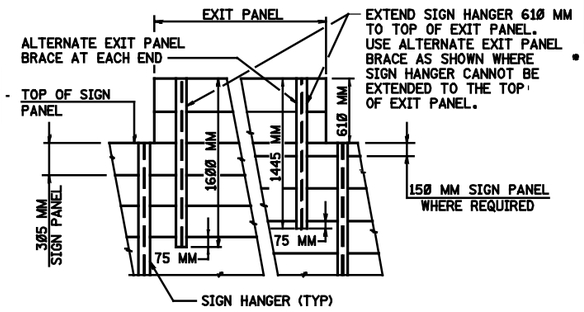

EXIT PANEL CONNECTION DETAIL

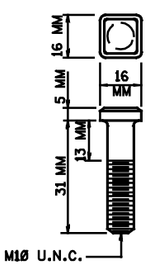

POST CLIP BOLT

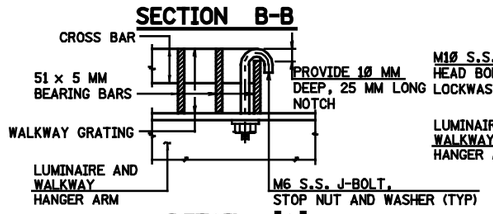

DETAIL "A"

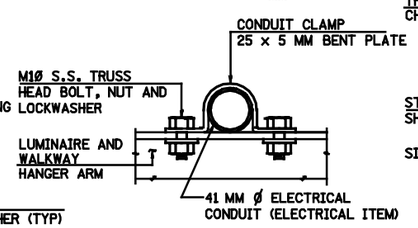

DETAIL "B"

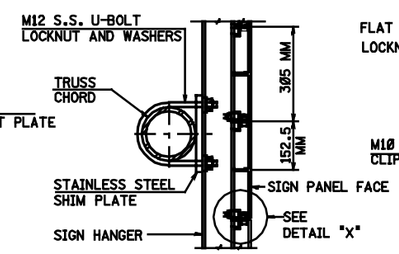

SIGN PANEL CONNECTION DETAIL

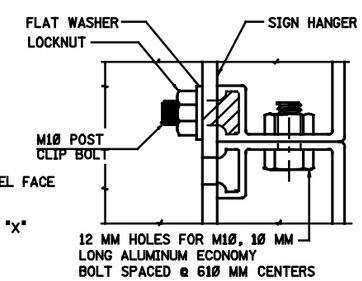

DETAIL "X"

NOTE: ALL DIMENSIONS SHOWN ON THIS SHEET ARE IN METRIC UNITS.

SIGN STRUCTURE DRG. OH-D9

NEW JERSEY DEPARTMENT OF TRANSPORTATION
BUREAU OF STRUCTURAL ENGINEERING

OVERHEAD SIGN SUPPORT STRUCTURES
MAINTENANCE WALKWAY DETAILS

ROUTE: SECTION:

SCALE : NONE

BRIDGE SHEET NO. OF

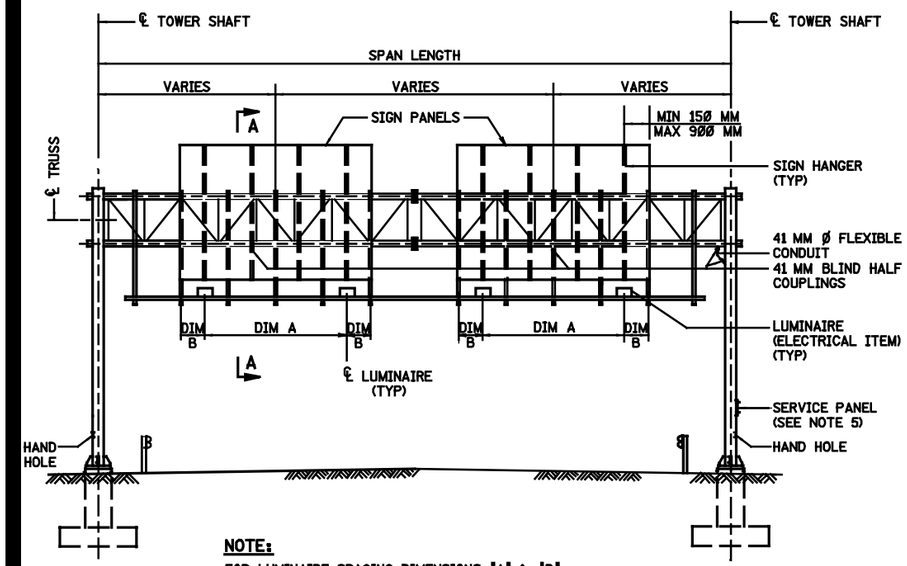

NOTE:

FOR LUMINAIRE SPACING DIMENSIONS "A" & "B" SEE SIGN LIGHTING ASSEMBLY DETAIL.

ELEVATION - TYPICAL OVERHEAD SIGN SUPPORT

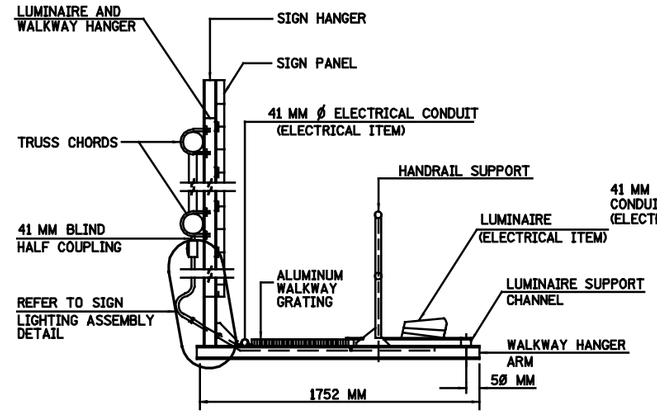

SECTION A-A

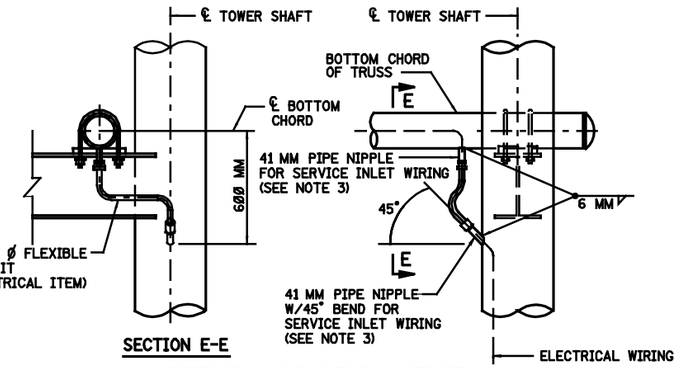

SECTION E-E

DETAILS OF WIRE OUTLETS

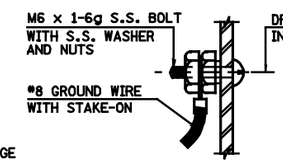

GROUND STUD

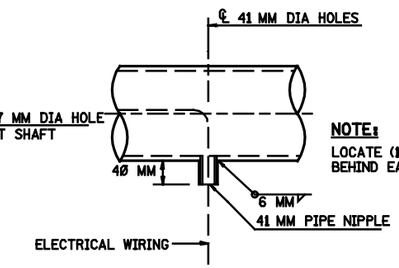

NOTE:

LOCATE (1) ONE WIRE OUTLET BEHIND EACH SIGN PANEL

DETAIL OF WIRE OUTLET ON TUBE

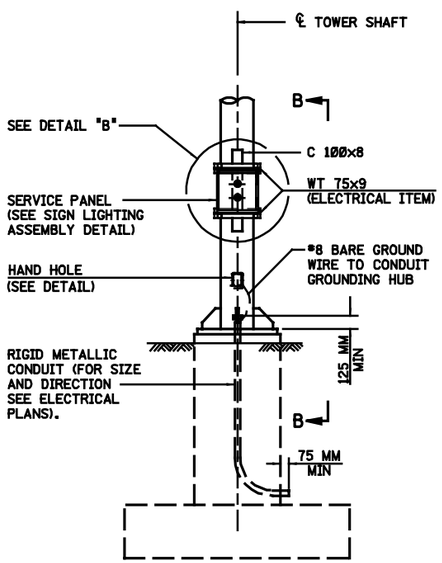

SIDE ELEVATION

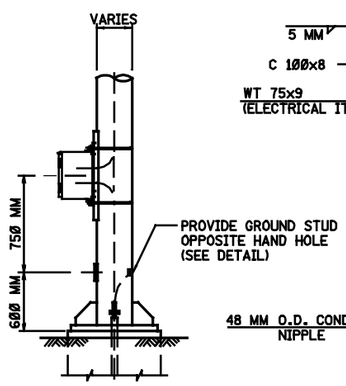

SECTION B-B

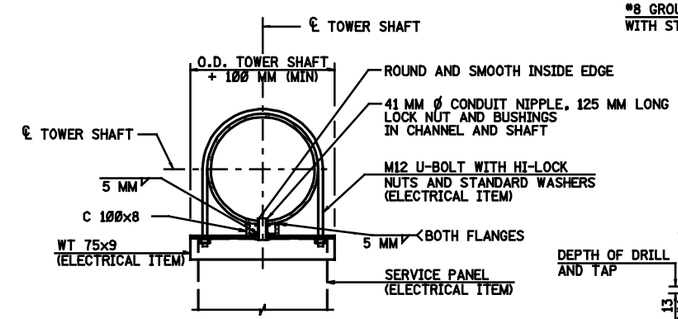

SECTION C-C

NOTE:

HAND HOLE AND GROUND STUD TO BE PROVIDED IN EACH TOWER SHAFT

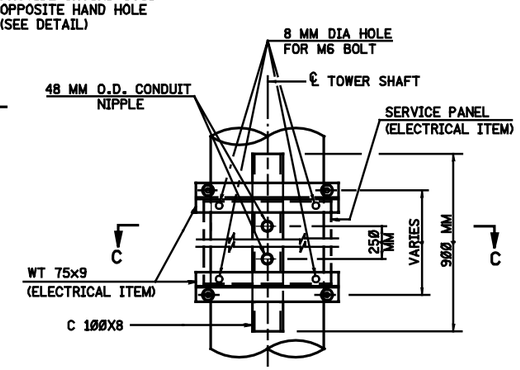

DETAIL "B"

TYPICAL SERVICE PANEL DETAIL AT SIGN STRUCTURE

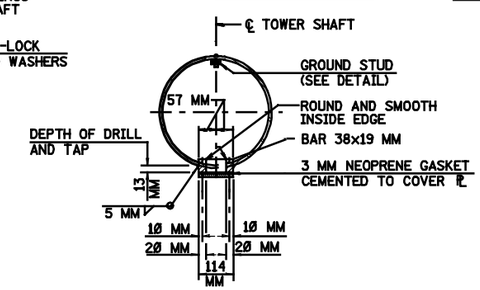

SECTION D-D

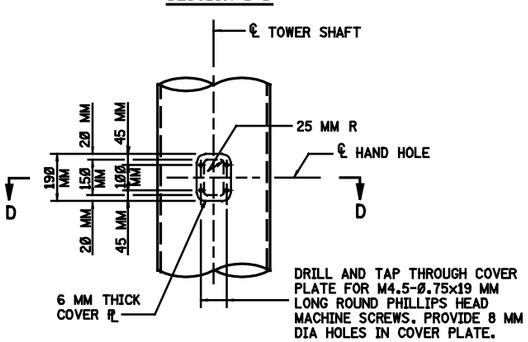

HAND HOLE AND COVER DETAIL

NOTES:

1. WHEN SIGN LIGHTING IS REQUIRED, AN APPROVED SIGN LIGHTING SYSTEM SHALL BE PROVIDED.
2. ALL BOLTS TO BE INSTALLED WITH WASHERS, LOCKWASHERS AND NUTS. ALL HARDWARE SHALL BE STAINLESS STEEL CONFORMING TO ASTM A320/A320M, GRADE B8, CLASS 1.
3. 41 MM STANDARD PIPE NIPPLES SHALL BE OF APPROVED MATERIAL AND BE COMPATIBLE WITH THE MATERIAL TO WHICH THEY ARE WELDED.
4. IF REQUIRED, WALKWAY GRATING AND LUMINAIRE SUPPORT CHANNELS SHALL BE CONTINUOUS FROM HANGER TO HANGER.
5. SEE ELECTRICAL PLANS FOR LOCATION AND DIRECTION OF SERVICE PANEL, RIGID CONDUITS, AND FLEXIBLE CONDUITS.

NOTE: ALL DIMENSIONS SHOWN ON THIS SHEET ARE IN METRIC UNITS.

SIGN STRUCTURE DRG. OH-D10

NEW JERSEY DEPARTMENT OF TRANSPORTATION
BUREAU OF STRUCTURAL ENGINEERING

OVERHEAD SIGN SUPPORT STRUCTURES
TYPICAL ELECTRICAL DETAILS

ROUTE: SECTION:

SCALE : NONE

BRIDGE SHEET NO. OF

STATE N.J. FEDERAL PROJECT NO.

BRCOD 66 ORIGINAL SHEET

GENERAL NOTES

A. DESIGN CRITERIA

DESIGN SPECIFICATIONS

1996 AASHTO STANDARD SPECIFICATIONS FOR HIGHWAY BRIDGES (16TH EDITION) AS MODIFIED BY SECTION 3 AND SECTION 32 OF THE CURRENT NJDOT DESIGN MANUAL - BRIDGES AND STRUCTURES, AND 1994 AASHTO STANDARD SPECIFICATIONS FOR STRUCTURAL SUPPORTS FOR HIGHWAY SIGNS, LUMINAIRES AND TRAFFIC SIGNALS.

DESIGN LOADS

DESIGN WIND VELOCITY ---- 129 KM/H
DESIGN ICE LOAD --------- 144 PA

SEISMIC LOADS FOR SEISMIC PERFORMANCE CATEGORY (SPC) B, A=0.18, SOIL PROFILE IV (REF. 1996 AASHTO, DIVISION 1A).

FATIGUE LOADS

ALL STRUCTURAL DETAILS HAVE BEEN DESIGNED FOR FATIGUE RESISTANCE UNDER THE FOLLOWING FATIGUE LOADS:

1) NATURAL WIND GUSTS: P_{nw} = 250Cd (PA),
WHERE Cd IS THE DRAG COEFFICIENT SPECIFIED IN SECTION 1.2.5 OF THE 1994 STANDARD SPECIFICATIONS FOR STRUCTURAL SUPPORTS FOR HIGHWAY SIGNS, LUMINAIRES, AND TRAFFIC SIGNALS. NATURAL WIND GUST PRESSURE RANGE APPLIED IN THE HORIZONTAL DIRECTION TO THE AREA PROJECTED ON A VERTICAL PLANE OF ALL SUPPORT STRUCTURE MEMBERS, SIGN PANELS AND WALKWAYS.

2) TRUCK-INDUCED GUSTS: P_{tg} = 1760Cd (PA),
WHERE Cd IS THE DRAG COEFFICIENT SPECIFIED IN SECTION 1.2.5 OF THE 1994 STANDARD SPECIFICATIONS FOR STRUCTURAL SUPPORTS FOR HIGHWAY SIGNS, LUMINAIRES, AND TRAFFIC SIGNALS. TRUCK GUST PRESSURE RANGE APPLIED IN THE UPWARD VERTICAL DIRECTION ALONG THE FULL LENGTH OF THE TRUSS SPAN TO THE AREA PROJECTED ON A HORIZONTAL PLANE OF ALL SUPPORT STRUCTURE MEMBERS, SIGN PANELS, AND WALKWAYS.

VARIABLE MESSAGE SIGN (VMS) STRUCTURES

REFER TO SECTION 32 OF THE NJDOT DESIGN MANUAL - BRIDGES AND STRUCTURES WHEN FURNISHING SUPPORT STRUCTURES FOR VARIABLE MESSAGE SIGNS (VMS).

CONCRETE DESIGN STRESSES

SPECIFIED COMPRESSIVE STRENGTH ($f'c$) (CLASS B) ---- 21 MPA
EXTREME FIBER COMPRESSIVE STRESS (fc) ----------- 8.4 MPA

REINFORCEMENT STEEL DESIGN STRESS

TENSILE STRESS (fs) (A615/A615M, GRADE 420) ---- 165 MPA

STRUCTURAL STEEL DESIGN STRENGTHS

YIELD STRENGTH (Fy)
PIPES (A53, TYPE S OR TYPE E, GRADE B) ---- 240 MPA (MIN.)
---- 355 MPA (MAX.)

FOUNDATIONS

MAXIMUM FOUNDATION BEARING PRESSURE ---- 0.120 MPA
FOOTINGS ARE DESIGNED SUCH THAT A MINIMUM OF 75 PERCENT OF THE FOOTING IS ALWAYS IN CONTACT; A MAXIMUM OF 25 PERCENT OF THE FOOTING IS IN UPLIFT.

BEARING PILES SHALL BE CAST-IN-PLACE CONCRETE PILES WITH A MINIMUM BEARING CAPACITY EQUAL TO 214 KN.

CAMBER

PERMANENT CAMBER EQUAL TO L/1000 HAS BEEN PROVIDED IN ADDITION TO THE DEAD LOAD CAMBER.

B. MATERIALS

I. STEEL

STEEL PIPE SHALL BE CERTIFIED BY MILL TEST REPORT TO MEET ASTM SPECIFICATION A53, TYPE E OR S, GRADE B WITH THE EXCEPTION THAT API 5L, GRADE B MAY BE USED WHEN THE SPECIFIED WALL THICKNESS IS GREATER THAN 13 MM. ONLY ELECTRICAL RESISTANCE WELDED (ERW) MANUFACTURED SINGLE SEAM PIPE IS PERMITTED. HOWEVER, WHEN THE REQUIRED PIPE SIZE IS GREATER THAN 600 MM, DOUBLE SEAM PIPE MAY BE USED. A MILL TEST REPORT MUST BE PROVIDED, CERTIFIED AND SIGNED BY THE PIPE MANUFACTURER, CONTAINING PHYSICAL AND CHEMICAL PROPERTIES AND THE MANUFACTURING PROCESS USED TO PRODUCE THE PIPE.

ALL OTHER STEEL SHALL CONFORM TO ASTM SPECIFICATION A36/A36M GRADE 250 OR AASHTO M270/M270M GRADE 345 (ASTM A709/A709M). ALL THIS SPECIFICATION STEEL SHALL MEET SUPPLEMENTARY REQUIREMENTS FOR NOTCH TOUGHNESS (CHARPY TESTING, ZONE #2)

REFER TO SUBSECTION 509.02 OF THE NJDOT STANDARD SPECIFICATIONS FOR ADDITIONAL REQUIREMENTS.

UPON COMPLETION OF FABRICATION, THE FABRICATOR SHALL PROVIDE A NOTARIZED CERTIFICATION OF COMPLIANCE AS PER SECTION 106.04 OF THE NJDOT STANDARD SPECIFICATIONS, INCLUDING A LEGIBLE COPY OF ALL MILL TEST REPORTS FOR MATERIALS INCORPORATED INTO THE WORK.

STEEL ANCHOR BOLTS, NUTS AND WASHERS SHALL CONFORM TO ASTM SPECIFICATION F1554, GRADE 250. THE ANCHOR BOLTS SHALL BE HOT DIP GALVANIZED AS PER ASTM SPECIFICATION A153, CLASS C.

CHORD SPLICE ASSEMBLY FASTENERS SHALL BE HIGH STRENGTH STEEL CONFORMING TO ASTM SPECIFICATION A325M AND SHALL BE HOT DIP GALVANIZED AS PER ASTM SPECIFICATION A153, CLASS C. ALL OTHER FASTENERS SHALL BE STAINLESS STEEL CONFORMING TO ASTM SPECIFICATION A320/A320M, GRADE B8, CLASS 1.

CAPS FOR THE ENDS OF CHORDS AND TOPS OF POSTS SHALL BE STEEL CONFORMING TO ASTM SPECIFICATION A36/A36M AND SHALL BE HOT DIP GALVANIZED IN ACCORDANCE WITH ASTM SPECIFICATION A123.

WELDING OF STEEL SHALL BE AS SPECIFIED IN THE CONSTRUCTION SPECIFICATIONS.

AFTER COMPLETE FABRICATION, EACH STEEL SECTION SHALL BE HOT DIP GALVANIZED ACCORDING TO THE REQUIREMENTS OF ASTM SPECIFICATION A123, AS MODIFIED BY THE CONSTRUCTION SPECIFICATIONS. A SINGLE DIP GALVANIZING PROCESS IS PREFERRED IF SIZE PERMITS.

II. ALUMINUM

ALUMINUM SHALL CONFORM TO THE ASTM SPECIFICATIONS AND ALLOYS LISTED BELOW:

APPLICATION	ASTM SPECIFICATION	ASTM ALLOY
ROLLED OR EXTRUDED SHAPES	B308/B308M	6061 - T6
PLATES	B209M	6061 - T6
DRAWN SEAMLESS TUBES	B210M	6061 - T6
EXTRUDED TUBES	B221M	6061 - T6

WELDING OF ALUMINUM SHALL BE AS SPECIFIED IN THE CONSTRUCTION SPECIFICATIONS.

III. REINFORCEMENT STEEL

ALL REINFORCEMENT STEEL SHALL BE ASTM A615/A615M, GRADE 420.

IV. CONCRETE

ALL CONCRETE SHALL BE "CONCRETE IN STRUCTURES, FOOTINGS", UNLESS OTHERWISE SPECIFIED BY THE DESIGNER.

V. SIGN LIGHTING

WHEN NECESSARY, AN APPROVED SIGN LIGHTING SYSTEM MAY BE USED AND THE DETAILS OF THE SYSTEM SHALL BE PROVIDED. NJDOT TRAFFIC SIGNAL AND SAFETY ENGINEERING SHOULD BE CONTACTED FOR REQUIREMENTS REGARDING THE PROVISION OF SIGN LIGHTING OR REFLECTORIZED SIGN PANELS.

VI MAINTENANCE WALKWAY

THE PROVISION OF MAINTENANCE WALKWAYS IS NOT REQUIRED. THE MAINTENANCE WALKWAY DETAIL SHEET SHALL BE EXCLUDED FROM SIGN STRUCTURE DRAWINGS WHEN WALKWAY IS NOT PROVIDED. IF THE WALKWAY IS PROVIDED, ADD THE FOLLOWING TO THE GENERAL NOTES OF THE SIGN STRUCTURE DRG. OH-D1. "MAINTENANCE WALKWAYS AND LUMINAIRE SUPPORTS SHALL BE ALUMINUM. SIGN HANGERS SHALL BE ALUMINUM OR STEEL. STEEL SURFACES SHALL BE PREVENTED FROM COMING INTO CONTACT WITH ALUMINUM SURFACES BY MEANS OF APPROVED PADS OR A PROTECTIVE COATING PLACED BETWEEN THE DISSIMILAR METALS. PADS SHALL BE STAINLESS STEEL CONFORMING TO ASTM SPECIFICATION A240, TYPE 304 OR APPROVED EQUAL."

INSTRUCTIONS FOR DESIGNERS

STEP #1: PREPARE A SIGN SUPPORT LOCATION PLAN AND ELEVATION VIEW FOR EACH STRUCTURE.

STEP #2: ENTER THE SIGN SUPPORT NUMBER AND STATION IN THE SCHEDULE OF STRUCTURES ON SIGN STRUCTURE DRG. CA-D2 OF THE CONTRACT PLANS.

STEP #3: DETERMINE THE TRUSS SPAN LENGTH AND HEIGHT OF THE STRUCTURE USING SIGN STRUCTURE DRG. CA-G2. RECORD THE ACTUAL TRUSS SPAN LENGTH IN THE SCHEDULE OF STRUCTURES ON SIGN STRUCTURE DRG. CA-D2 OF THE CONTRACT PLANS. ROUND THIS NUMBER TO THE NEXT HIGHER LISTED SPAN LENGTH. IF THE TRUSS SPAN LENGTH IS OVER 12 METERS, PROCEED TO STEP #16.

STEP #4: DETERMINE THE SIGN DESIGN LENGTH USING SIGN STRUCTURE DRG. CA-G2. DIVIDE THE SIGN DESIGN LENGTH BY THE TRUSS SPAN LENGTH DETERMINED IN STEP #3 TO OBTAIN THE PERCENT SIGN DESIGN LENGTH. USE THE NEXT HIGHER PERCENT FROM THOSE LISTED (40%, 60%, 70%, OR 80%). IF THE PERCENT IS MORE THAN 80, PROCEED TO STEP #5. OTHERWISE, SKIP TO STEP #6.

STEP #5: TO SELECT A STANDARD DESIGN, DIVIDE THE SIGN DESIGN LENGTH BY 80% AND ROUND THIS NUMBER TO THE NEXT HIGHER LISTED SPAN LENGTH. IF THE NUMBER IS LESS THAN 12 METERS, RETURN TO STEP #4. OTHERWISE, PROCEED TO STEP #16.

STEP #6: HAVING OBTAINED THE TRUSS SPAN LENGTH (FROM STEP #3 OR STEP #5) AND THE PERCENT SIGN DESIGN LENGTH (FROM STEP #4), SELECT THE TRUSS SIZE AND THE TRUSS ELEMENT SIZES (I.E., CHORDS, DIAGONALS, AND STRUTS) USING THE APPROPRIATE DESIGN TABLES ON SIGN STRUCTURE DRG. CA-G3. RECORD THE DATA IN THE SCHEDULE OF STRUCTURES ON SIGN STRUCTURE DRG. CA-D2 OF THE CONTRACT PLANS.

STEP #7: WITH THE HEIGHT OF THE STRUCTURE OBTAINED IN STEP #3 AND USING THE ELEVATION OF THE BOTTOM OF BASE PLATE, DETERMINE THE ELEVATION OF THE CENTER LINE OF THE TRUSS AND THE DESIGN HEIGHT OF THE POST. IF THE POST HEIGHT IS MORE THAN 12 METERS, SKIP TO STEP #16. OTHERWISE, SELECT THE NEXT HIGHER NUMBER FROM THOSE LISTED (8, 10, OR 12 METERS). USING THE SAME TABLE USED IN STEP #6, SELECT THE SIZE OF THE POST (I.E., OUTSIDE DIAMETER AND THICKNESS). RECORD THE DATA IN THE SCHEDULE OF STRUCTURES ON SIGN STRUCTURE DRG. CA-D2 OF THE CONTRACT DRAWINGS.

STEP #8: CHECK AVAILABILITY OF SHAPES SELECTED IN STEPS #6 AND #7.

STEP #9: USING SOIL TEST AND SOIL BORING INFORMATION, DETERMINE THE ALLOWABLE SOIL PRESSURE AND THE REQUIRED DEPTH OF FOOTINGS.

STEP #10: DETERMINE THE PEDESTAL HEIGHT. IF THE PEDESTAL HEIGHT IS BETWEEN 1.2 METERS AND 1.8 METYERS, PROCEED TO STEP #11. OTHERWISE, SKIP TO STEP #16. THE PREFERRED PEDESTAL HEIGHT OF 1.4 METERS IS TO BE USED WHENEVER POSSIBLE. WHEN USING A BARRIER PEDESTAL, THE "COVERED" HEIGHT MUST BE 1.0 METER. OTHERWISE, SKIP TO STEP # 16

STEP #11: DETERMINE THE REQUIRED FOOTING SIZES USING THE DESIGN TABLE ON SIGN STRUCTURE DRGS. CA-G3. RECORD THE DATA IN THE SIGN SUPPORT FOUNDATION TABLE ON SIGN STRUCTURE DRG. CA-D2 OF THE CONTRACT PLANS.

STEP #12: DETERMINE THE REQUIRED FOOTING DESIGN DATA USING SIGN STRUCTURE DRG. CA-G5. RECORD THIS DATA IN THE SIGN SUPPORT FOUNDATION TABLE ON SIGN STRUCTURE DRG. CA-D2 OF THE CONTRACT PLANS. IF THE ALLOWABLE SOIL PRESSURE IS GREATER THAN 0.120 MEGAPASCALS, SKIP TO STEP #14. OTHERWISE, PROCEED TO STEP #13.

STEP #13: SELECT THE NUMBER OF CAST-IN-PLACE CONCRETE PILES NEEDED TO SUPPORT THE STRUCTURE USING SIGN STRUCTURE DRG. CA-G5. RECORD THE DATA IN THE SIGN SUPPORT FOUNDATION TABLE ON SIGN STRUCTURE DRG. CA-D2 OF THE CONTRACT PLANS.

STEP #14: DETERMINE WHETHER A PEDESTAL OR BARRIER PEDESTAL IS TO BE USED FOR THE FOUNDATION. SELECT ALL PEDESTAL OR BARRIER PEDESTAL DATA FROM SIGN STRUCTURE DRG. CA-G4. RECORD THE DATA IN THE SIGN SUPPORT FOUNDATION TABLE ON SIGN STRUCTURE DRG. CA-D2 OF THE CONTRACT PLANS.

STEP #15: THE DESIGN OF THE CANTILEVER SIGN SUPPORT STRUCTURE IS COMPLETE. DISREGARD STEP #16.

STEP #16: THE PARAMETERS OF THE SIGN SUPPORT STRUCTURE EXCEED THE RESTRICTIONS RELATED TO THESE STANDARD DESIGN TABLES. DESIGN THE SIGN SUPPORT STRUCTURE ON AN INDIVIDUAL BASIS.

INDEX OF DRAWINGS

DRG. NO.	DESCRIPTION
CA-G1	GENERAL INFORMATION
CA-G2	GENERAL CRITERIA
CA-G3	DESIGN TABLES - STEEL TRUSSES AND STEEL POSTS
CA-G4	PEDESTAL AND BARRIER PEDESTAL DESIGN TABLES AND DETAILS
CA-G5	FOOTING DESIGN TABLES AND DETAILS

NOTE: ALL DIMENSIONS SHOWN ON THIS SHEET ARE IN METRIC UNITS.

THIS PLATE FOR DESIGN INFORMATION ONLY.
DO NOT INCLUDE IN CONTRACT PLANS.

SIGN STRUCTURE DRG. CA-G1

NEW JERSEY DEPARTMENT OF TRANSPORTATION
BUREAU OF STRUCTURAL ENGINEERING

CANTILEVER SIGN SUPPORT STANDARDS

GENERAL INFORMATION

SCALE : NONE

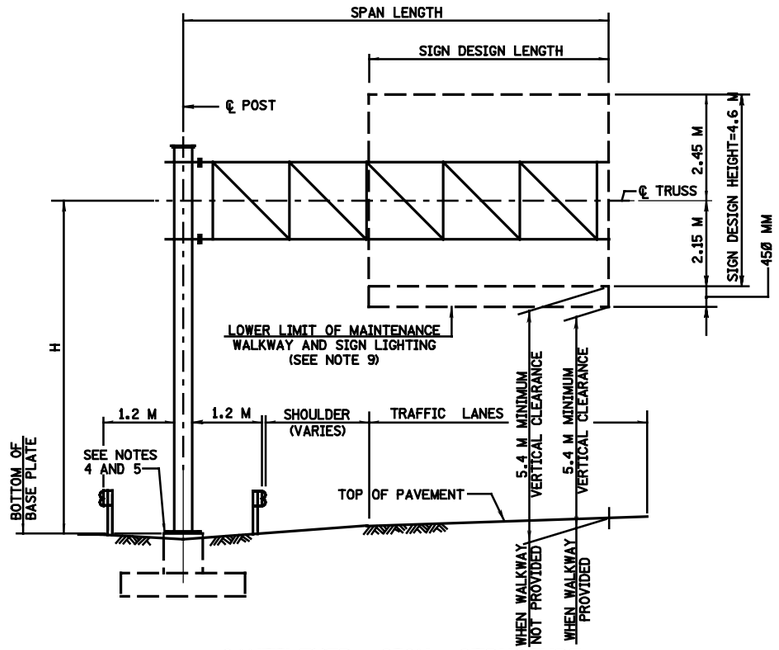

CANTILEVER SIGN STRUCTURE

DIVIDED HIGHWAY
PEDESTAL MOUNTED

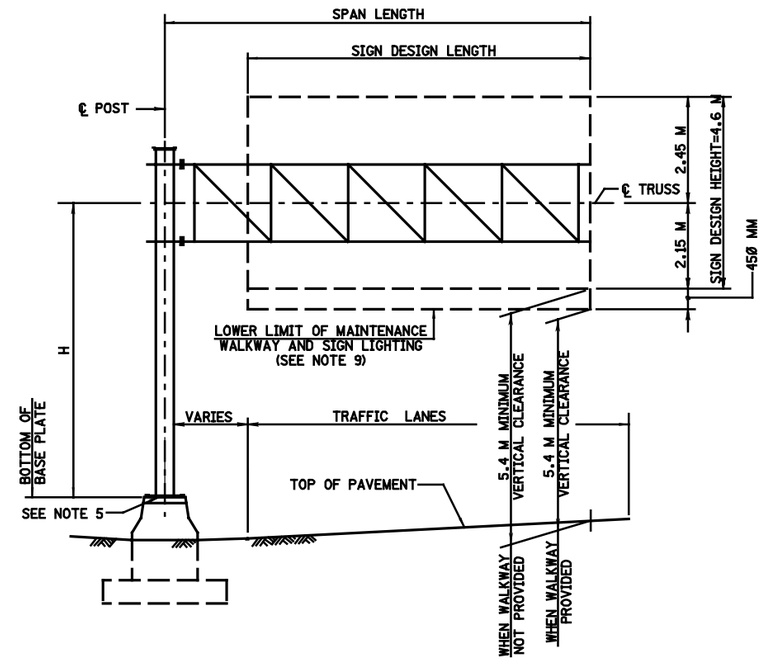

CANTILEVER SIGN STRUCTURE

DIVIDED HIGHWAY
BARRIER MOUNTED

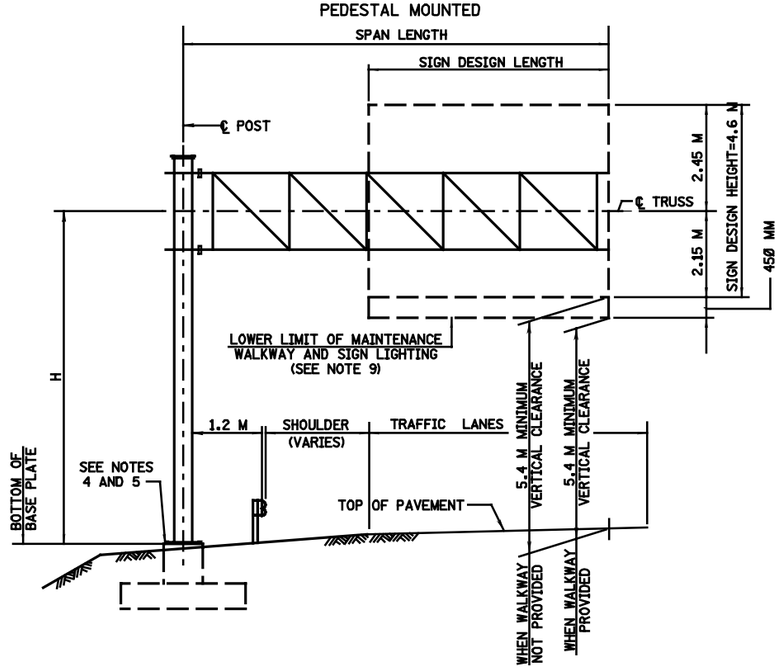

CANTILEVER SIGN STRUCTURE

NONDIVIDED HIGHWAY AND RAMPS
PEDESTAL MOUNTED

NOTES:

1. THE SIGN DESIGN LENGTH EXTENDS FROM THE END OF THE CANTILEVER TO THE EDGE OF THE USEABLE TRAFFIC LANES.
2. THE BOTTOM EDGE OF ALL SIGN PANELS SHALL BE LEVEL AND AT THE SAME ELEVATION.
3. THE TOP EDGE OF ALL SIGN PANELS SHALL PROJECT NOT LESS THAN 150 MM ABOVE THE TOP OF THE TOP CHORD. THE SIGN PANEL SIZES AND LOCATIONS SHALL BE VERIFIED AND APPROVED BY THE DESIGNER.
4. TOP OF PEDESTALS SHALL BE SET 100 MM ABOVE THE FINISHED GROUND LINE.
5. THE ELEVATION OF THE BOTTOM OF THE POST BASE PLATE SHALL BE SET AT (ANCHOR BOLT DIAMETER + 25 MM) ABOVE TOP OF PEDESTAL OR TOP OF BARRIER PEDESTAL.
6. THE TRUSS SHALL BE A TWO-CHORD PLANAR TRUSS.
7. IF REQUIRED, MAINTENANCE WALKWAY, RAILING, AND LUMINAIRE SUPPORTS SHALL BE PROVIDED CONTINUOUSLY FOR THE ENTIRE SIGN DESIGN LENGTH. THE NEED FOR MAINTENANCE WALKWAY, RAILING AND LUMINAIRE SUPPORTS SHALL BE VERIFIED AS PART OF THE PRELIMINARY SUBMISSION.
8. IF THE POST FOUNDATION IS WITHIN THE CLEAR ZONE, IT SHALL BE PROTECTED BY GUIDE RAIL, BARRIER OR OTHER SUITABLE MEANS, DEPENDING UPON SITE CONDITIONS.
9. WHEN MAINTENANCE WALKWAY IS NOT PROVIDED, THE 5.4 M VERTICAL UNDERCLEARANCE SHALL BE PROVIDED TO THE BOTTOM OF SIGN LIGHTING. THE WALKWAY RELATED DETAILS SHALL BE EXCLUDED FROM THE SIGN STRUCTURE PLANS.

NOTE: ALL DIMENSIONS SHOWN ON THIS SHEET ARE IN METRIC UNITS.

THIS PLATE FOR DESIGN INFORMATION ONLY. DO NOT INCLUDE IN CONTRACT PLANS.

SIGN STRUCTURE DRG. CA-G2

NEW JERSEY DEPARTMENT OF TRANSPORTATION
BUREAU OF STRUCTURAL ENGINEERING

CANTILEVER SIGN SUPPORT STANDARDS

GENERAL CRITERIA

SCALE : NONE

BRIDGE SHEET NO. OF

2 / 5

SPAN LENGTH (M)	SIGN LENGTH (%)	STEEL TRUSS MEMBERS				STEEL POSTS			PEDESTALS						BARRIER PEDESTALS						FOOTINGS			SIGN LENGTH (%)	SPAN LENGTH (M)
		CHORDS O.D.xTHICK (MM)	STRUTS O.D.xTHICK (MM)	STEEL STUBS O.D.xTHICK (MM)	CAMBER (MM)	POST HEIGHT H = 8 M O.D.xTHICK (MM)	POST HEIGHT H = 10 M O.D.xTHICK (MM)	POST HEIGHT H = 12 M O.D.xTHICK (MM)	H = 8 M PD (MM)	H = 8 M VERT REBARS No. & SIZE	H = 10 M PD (MM)	H = 10 M VERT REBARS No. & SIZE	H = 12 M PD (MM)	H = 12 M VERT REBARS No. & SIZE	H = 8 M BWT (MM)	H = 8 M VERT REBARS No. & SIZE	H = 10 M BWT (MM)	H = 10 M VERT REBARS No. & SIZE	H = 12 M BWT (MM)	H = 12 M VERT REBARS No. & SIZE	H = 8 M FLxFW (M)	H = 10 M FLxFW (M)	H = 12 M FLxFW (M)		
6	40	219.1x8.2	73.0x7.0	219.1x8.2	90	355.6x12.7	406.4x12.7	457.2x12.7	1000	21-#25	1050	23-#25	1100	25-#25	1000	21-#25	1050	23-#25	1100	25-#25	3.50x2.50	3.50X2.50	3.75x2.50	40	6
	50	219.1x12.7	73.0x7.0	219.1x12.7	80	406.4x12.7	406.4x12.7	457.2x12.7	1050	23-#25	1050	25-#25	1100	27-#25	1050	23-#25	1050	25-#25	1100	27-#25	3.50x2.50	3.75X2.50	4.00x2.50	50	
	60	219.1x12.7	73.0x7.0	219.1x12.7	70	406.4x12.7	457.2x12.7	508.0x12.7	1050	24-#25	1100	26-#25	1150	29-#25	1050	24-#25	1100	26-#25	1150	29-#25	3.75x2.50	4.00X2.50	4.25x2.75	60	
	70	219.1x12.7	73.0x7.0	219.1x12.7	60	457.2x12.7	457.2x12.7	508.0x12.7	1100	26-#25	1100	27-#25	1150	30-#25	1100	26-#25	1100	27-#25	1150	30-#25	4.00x2.50	4.00X2.75	4.25x3.00	70	
	80	219.1x12.7	73.0x7.0	219.1x12.7	50	457.2x12.7	508.0x12.7	558.8x12.7	1100	27-#25	1150	30-#25	1200	33-#25	1100	27-#25	1150	30-#25	1200	33-#25	4.00x2.75	4.25X3.00	4.50x3.00	80	
9	40	323.9x9.5	88.9x7.6	323.9x9.5	150	508.0x12.7	508.0x12.7	558.8x12.7	1150	28-#25	1150	30-#25	1200	33-#25	1150	28-#25	1150	30-#25	1200	33-#25	4.00x2.75	4.25X2.75	4.25x3.00	40	9
	50	323.9x12.7	101.6x8.1	323.9x12.7	140	508.0x12.7	558.8x12.7	609.6x12.7	1150	29-#25	1200	33-#25	1250	36-#25	1150	29-#25	1200	33-#25	1250	36-#25	4.25x2.75	4.25X3.00	4.50x3.25	50	
	60	323.9x12.7	101.6x8.1	323.9x12.7	120	558.8x12.7	609.6x12.7	609.6x12.7	1200	31-#25	1250	35-#25	1250	37-#25	1200	31-#25	1250	35-#25	1250	37-#25	4.25x3.00	4.50X3.25	5.00x3.25	60	
	70	323.9x12.7	101.6x8.1	323.9x12.7	110	558.8x12.7	609.6x12.7	660.4x12.7	1200	31-#25	1250	36-#25	1300	41-#25	1200	31-#25	1250	36-#25	1300	41-#25	4.50x3.00	4.75X3.25	5.00x3.50	70	
	80	323.9x12.7	101.6x8.1	323.9x12.7	90	609.6x12.7	660.4x12.7	660.4x15.9	1250	34-#25	1300	39-#25	1300	42-#25	1250	34-#25	1300	39-#25	1300	42-#25	4.50x3.25	5.00X3.25	5.25x3.50	80	
12	40	457.2x9.5	141.3x9.5	457.2x9.5	200	609.6x12.7	660.4x12.7	660.4x15.9	1250	30-#25	1300	35-#25	1300	37-#25	1250	30-#25	1300	35-#25	1300	37-#25	4.50x3.25	5.00X3.25	5.00x3.50	40	12
	50	457.2x12.7	141.3x9.5	457.2x12.7	220	660.4x12.7	660.4x15.9	660.4x15.9	1300	33-#25	1300	35-#25	1300	37-#25	1300	33-#25	1300	35-#25	1300	37-#25	5.00x3.50	5.00X3.50	5.25x3.75	50	
	60	457.2x12.7	141.3x9.5	457.2x12.7	190	660.4x15.9	660.4x15.9	660.4x19.1	1300	33-#25	1300	35-#25	1300	38-#25	1300	33-#25	1300	35-#25	1300	38-#25	5.00x3.50	5.25X3.75	5.50x3.75	60	
	70	457.2x12.7	141.3x9.5	457.2x12.7	190	660.4x15.9	660.4x19.1	660.4x19.1	1300	33-#25	1300	35-#25	1300	38-#25	1300	33-#25	1300	35-#25	1300	38-#25	5.25x3.50	5.25X3.75	5.50x4.00	70	
	80	457.2x12.7	141.3x9.5	457.2x12.7	170	660.4x15.9	660.4x19.1	660.4x22.2	1300	33-#25	1300	37-#25	1300	40-#25	1300	33-#25	1300	37-#25	1300	40-#25	5.25x3.75	5.50X3.75	5.75x4.00	80	

NOTE: % SIGN LENGTH = $\frac{\text{SIGN DESIGN LENGTH}}{\text{SPAN LENGTH}} \times 100$

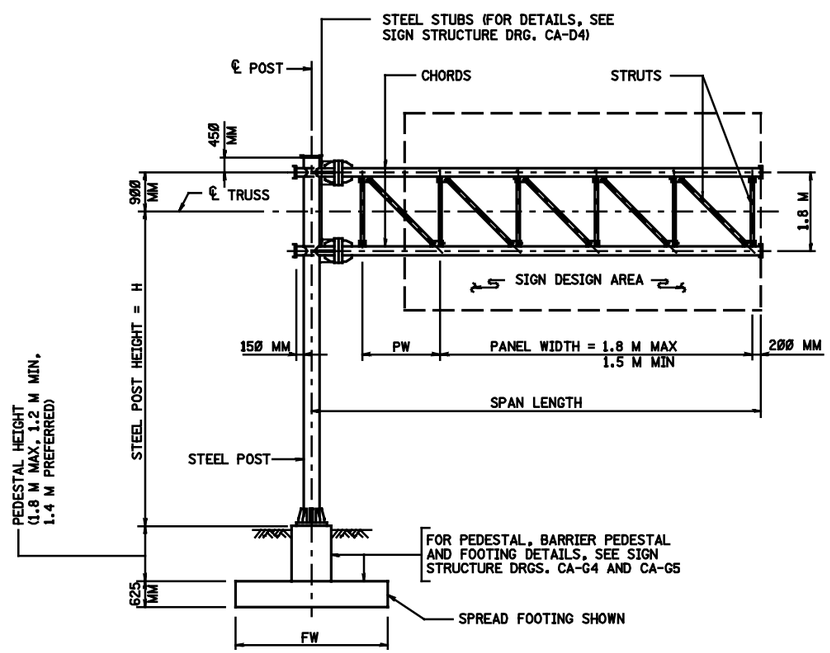

ELEVATION

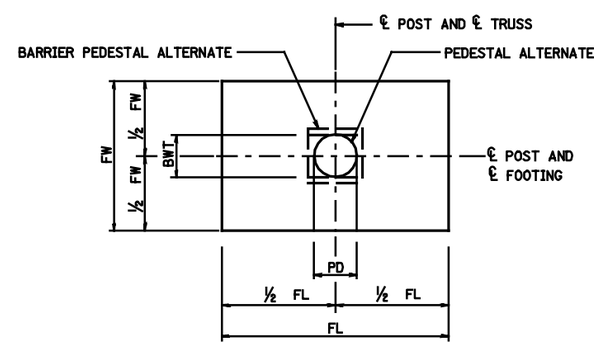

FOOTING PLAN

NOTE: ALL DIMENSIONS SHOWN ON THIS SHEET ARE IN METRIC UNITS.

THIS PLATE FOR DESIGN INFORMATION ONLY. DO NOT INCLUDE IN CONTRACT PLANS.

SIGN STRUCTURE DRG. CA-G3

NEW JERSEY DEPARTMENT OF TRANSPORTATION
BUREAU OF STRUCTURAL ENGINEERING

CANTILEVER SIGN SUPPORT STANDARDS DESIGN TABLES

STEEL TRUSSES AND STEEL POSTS

SCALE : NONE

BRIDGE SHEET NO. OF

3 / 5

8/2/2011 06 ORIGINAL SHEET

BARRIER PEDESTAL REINFORCEMENT

BARRIER TOP DIMENSION	VOL OF CONC	VERTICAL BARS				SPIRAL BARS				STANDARD BARRIER REBARS														WEIGHT SUB TOTAL
		TYPE "P-1"				TYPE "P-2"				#16 BAR, TYPE "B-1"				#16 BAR, TYPE "B-2"					#16 BAR, TYPE "B-3"					
BWT (MM)	(C.M.)	SIZE	A (MM)	LENGTH (MM)	WEIGHT (KG)	SIZE	SD (MM)	LENGTH (MM)	WEIGHT (KG)	LENGTH (MM)	No.	TOTAL LENGTH (MM)	WEIGHT (KG)	D (MM)	C (MM)	LENGTH (MM)	No.	WEIGHT (KG)	E (MM)	F (MM)	LENGTH (MM)	No.	WEIGHT (KG)	(KG)
1000	3.4	#25	710	2940	11.7	#13	900	79170	78.7	2440	10	24400	37.9	850	300	1400	4	8.7	1350	825	2950	12	54.9	101.5
1050	3.7	#25	710	2940	11.7	#13	950	83570	83.1	2440	10	24400	37.9	900	300	1450	4	9.0	1400	850	3050	12	56.8	103.7
1100	4.0	#25	710	2940	11.7	#13	1000	87970	87.4	2440	10	24400	37.9	950	300	1500	4	9.3	1450	875	3150	12	58.7	105.9
1150	4.2	#25	710	2940	11.7	#13	1050	92360	91.8	2440	10	24400	37.9	1000	300	1550	4	9.6	1500	900	3250	12	60.5	108.0
1200	4.5	#25	710	2940	11.7	#13	1100	96760	96.2	2440	12	29280	45.4	1050	300	1600	5	12.4	1550	925	3350	12	62.4	120.2
1250	4.8	#25	710	2940	11.7	#13	1150	101160	100.6	2440	12	29280	45.4	1100	300	1650	5	12.8	1600	950	3450	12	64.3	122.5
1300	5.1	#25	710	2940	11.7	#16	1200	105560	163.8	2440	12	29280	45.4	1150	300	1700	5	13.2	1650	975	3550	12	66.1	124.7

PEDESTAL REINFORCEMENT

PEDESTAL DIAMETER	VOL OF CONC	VERTICAL BARS				SPIRAL BARS			
		TYPE "P-1"				TYPE "P-2"			
PD (MM)	(C.M.)	SIZE	A (MM)	LENGTH (MM)	WEIGHT (KG)	SIZE	SD (MM)	LENGTH (MM)	WEIGHT (KG)
1000	1.4	#25	710	2930	11.6	#13	900	79170	78.7
1050	1.6	#25	710	2930	11.6	#13	950	83570	83.1
1100	1.7	#25	710	2930	11.6	#13	1000	87970	87.4
1150	1.9	#25	710	2930	11.6	#13	1050	92360	91.8
1200	2.0	#25	710	2930	11.6	#13	1100	96760	96.2
1250	2.2	#25	710	2930	11.6	#13	1150	101160	100.6
1300	2.4	#25	710	2930	11.6	#16	1200	105560	163.8

BAR SHAPES

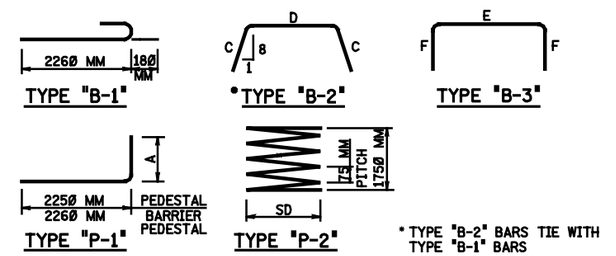

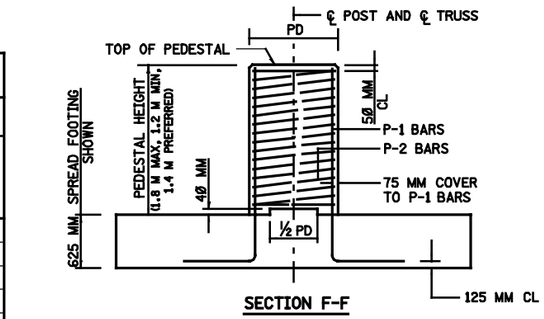

SECTION F-F

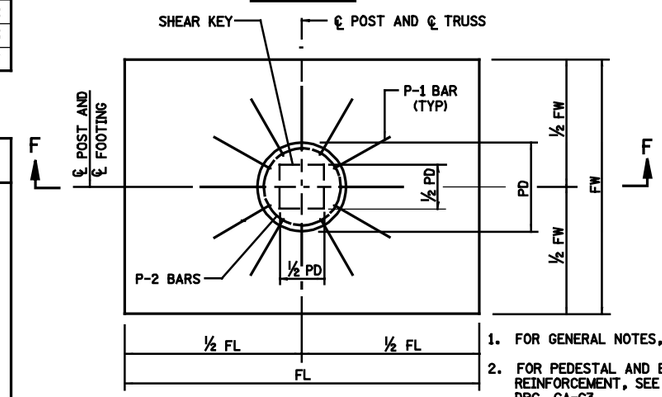

PLAN

PEDESTAL DETAILS

NOTES:

1. FOR GENERAL NOTES, SEE SIGN STRUCTURE DRG. CA-G1.
2. FOR PEDESTAL AND BARRIER PEDESTAL DIMENSIONS AND REINFORCEMENT, SEE DESIGN TABLES ON SIGN STRUCTURE DRG. CA-G3.
3. ALL REINFORCEMENT IN PEDESTALS AND BARRIER PEDESTALS SHALL BE CORROSION PROTECTED.
4. EXPOSED CONCRETE EDGES SHALL BE CHAMFERED 25x25 MM UNLESS NOTED OTHERWISE.
5. BARS SHALL NOT BE SPLICED EXCEPT AS PROVIDED ON THIS DRAWING OR AUTHORIZED BY THE ENGINEER. WHEN SPLICING IS APPROVED, THE REINFORCEMENT BARS SHALL BE LAPPED FOR A LENGTH OF AT LEAST 36 DIAMETERS (48 DIAMETERS FOR SPIRAL BARS) AND SHALL BE SECURELY WIRED TOGETHER.
6. LENGTH OF BARS SHOWN IN TABLE ALREADY CONSIDER BENDS. DIMENSIONS DESCRIBED IN BAR SHAPES TABLE ARE OUT-TO-OUT OF BAR.
7. CONCRETE VOLUMES SHOWN IN TABLE ARE FOR A 1.8 M HIGH PEDESTAL OR 1.81 M HIGH BARRIER PEDESTAL.
8. LENGTH OF B-1, P-1 AND P-2 BARS SHOWN IN TABLE ARE FOR A 1.8 M HIGH PEDESTAL OR 1.81 M HIGH BARRIER PEDESTAL.
9. WEIGHT SHOWN IN TABLE FOR P-1 BARS IS FOR ONE BAR ONLY.

NOTE: ALL DIMENSIONS SHOWN ON THIS SHEET ARE IN METRIC UNITS.

THIS PLATE FOR DESIGN INFORMATION ONLY. DO NOT INCLUDE IN CONTRACT PLANS.

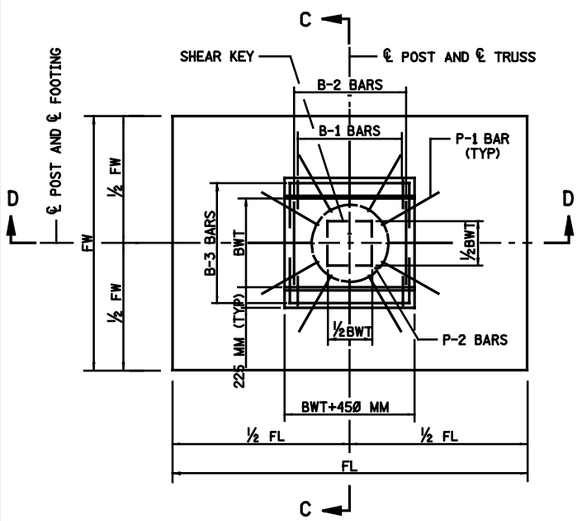

PLAN

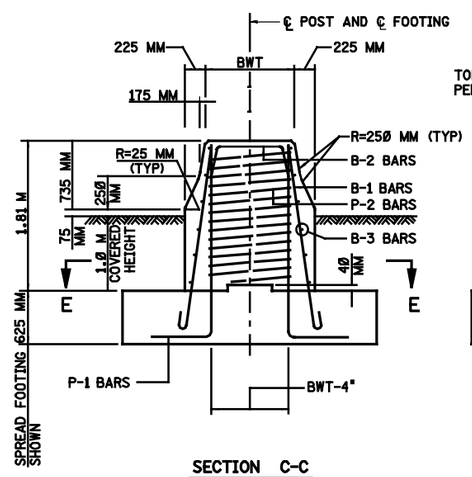

SECTION C-C

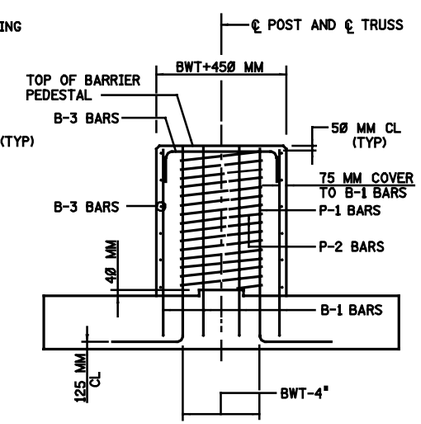

SECTION D-D

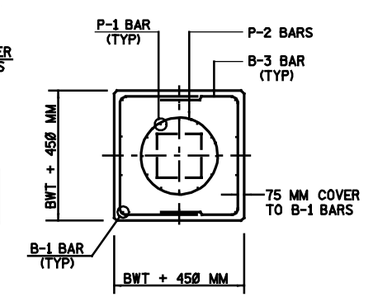

SECTION E-E

BARRIER PEDESTAL DETAILS

SIGN STRUCTURE DRG. CA-G4

NEW JERSEY DEPARTMENT OF TRANSPORTATION
BUREAU OF STRUCTURAL ENGINEERING

OVERHEAD SIGN SUPPORT STANDARDS

GENERAL INFORMATION

SCALE : NONE

BRIDGE SHEET NO. 4 OF 5

SPREAD FOOTINGS			PILE FOOTINGS					FOOTING REINFORCEMENT				
SIZE FL×FW	CONCRETE VOLUME	EXCAV* VOLUME	CONCRETE VOLUME	EXCAV** VOLUME	No. OF PILES IN ROW		TOTAL	No. AND SIZE OF BARS				TOTAL WEIGHT
(M)	(C.M.)	(C.M.)	(C.M.)	(C.M.)	"X" LONG	"Y" TRANS	No.	FLB	FWB	FLT	FWT	(KG)
3.50×2.50	5.5	25.8	6.8	27.4	4	3	12	10-#16	8-#16	6-#16	8-#16	144.0
3.75×2.50	5.9	27.5	7.3	29.2	4	3	12	13-#16	9-#16	6-#16	9-#16	174.7
4.00×2.50	6.3	29.2	7.8	31.0	4	3	12	10-#19	9-#16	6-#19	9-#16	206.5
4.00×2.75	6.9	31.8	8.5	33.8	4	3	12	12-#19	9-#16	7-#19	9-#16	239.6
4.25×2.75	7.3	33.7	9.1	35.7	4	3	12	14-#19	10-#16	7-#19	10-#16	277.0
4.25×3.00	8.0	36.4	9.9	38.7	4	3	12	15-#19	10-#16	7-#19	10-#16	294.1
4.50×3.00	8.4	38.4	10.5	40.8	4	3	12	17-#19	11-#16	7-#19	11-#16	335.0
4.50×3.25	9.1	41.3	11.3	43.9	4	4	16	19-#19	14-#16	8-#19	11-#16	387.7
4.75×3.25	9.6	43.5	12.0	46.2	4	4	16	15-#22	11-#19	8-#22	11-#19	480.2
5.00×3.25	10.2	45.0	12.6	48.4	4	4	16	17#22	12#19	8-#22	12-#19	541.6
5.00×3.50	10.9	48.8	13.6	51.9	4	4	16	19#22	13#19	8-#22	12-#19	592.4
5.25×3.50	11.5	51.1	14.2	54.3	4	4	16	17-#25	13-#19	8-#25	12-#19	701.5
5.25×3.75	12.3	54.5	15.3	57.9	4	4	16	18-#25	15-#19	9-#25	12-#19	772.7
5.50×3.75	12.9	57.0	16.0	60.5	4	4	16	20-#25	15-#19	9-#25	13-#19	850.6
5.50×4.00	13.8	60.5	17.1	64.2	4	4	16	20-#25	17-#19	9-#25	13-#19	883.7
5.75×4.00	14.4	63.1	17.8	67.0	5	4	20	22-#25	17-#19	9-#25	13-#19	957.4

* SPREAD FOOTING EXCAVATION VOLUME BASED ON 2.425 M TOTAL DEPTH OF EXCAVATION.

** PILE FOOTING EXCAVATION VOLUME BASED ON 2.575 M TOTAL DEPTH OF EXCAVATION.

LEGEND:

FL : FOOTING LENGTH
FW : FOOTING WIDTH
FLB : No. AND SIZE OF BOTTOM BARS IN DIRECTION FL
FWB : No. AND SIZE OF BOTTOM BARS IN DIRECTION FW
FLT : No. AND SIZE OF TOP BARS IN DIRECTION FL
FWT : No. AND SIZE OF TOP BARS IN DIRECTION FW
PD : PEDESTAL DIAMETER
BWT : BARRIER WIDTH AT TOP

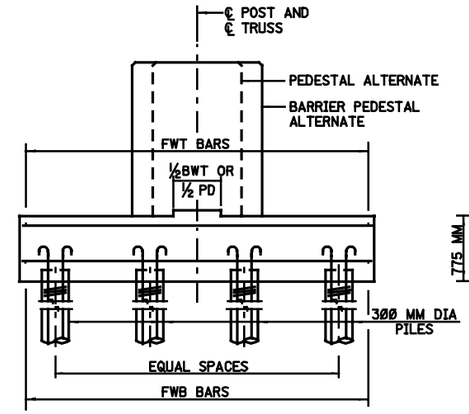

SECTION D-D

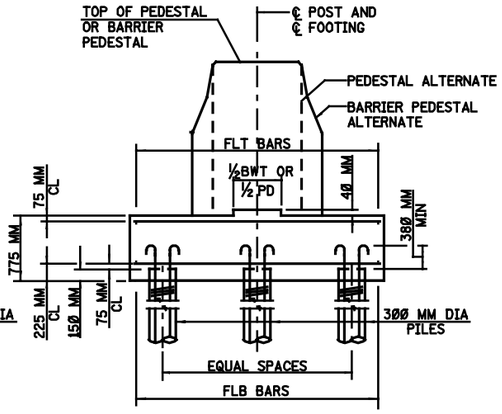

SECTION E-E

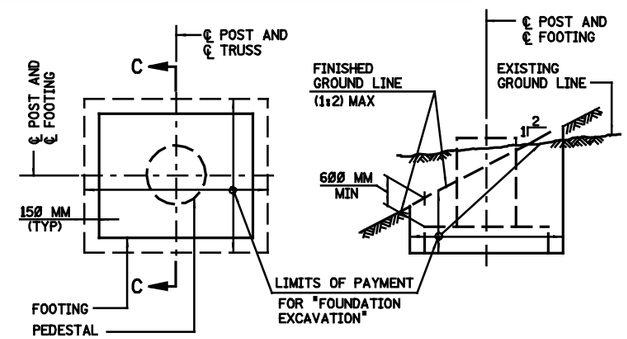

PLAN SECTION C-C

FOOTING EXCAVATION DETAILS

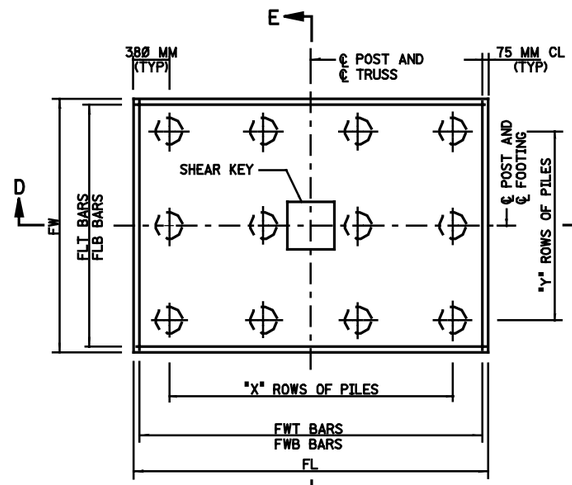

PLAN

PILE FOOTING DETAILS

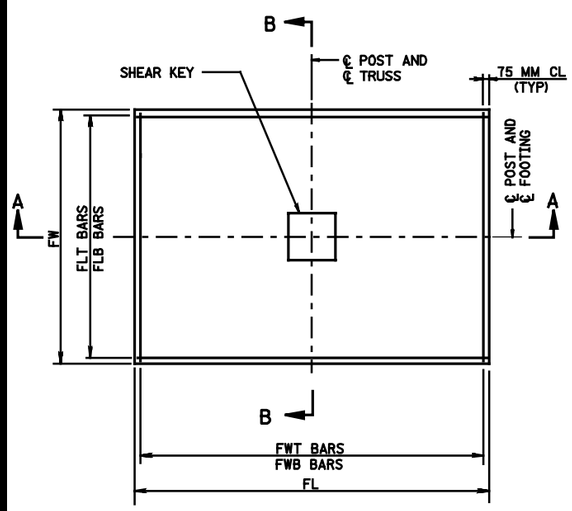

PLAN

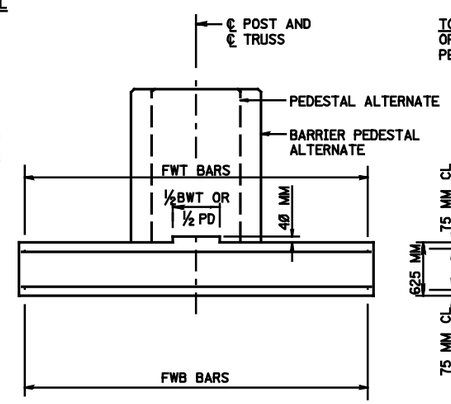

SECTION A-A

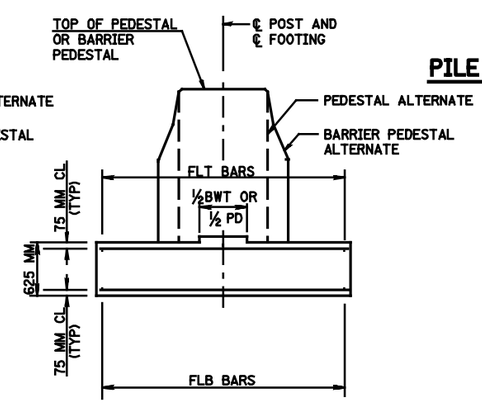

SECTION B-B

SPREAD FOOTING DETAILS

NOTES:

1. FOR GENERAL NOTES, SEE SIGN STRUCTURE DRG. CA-G1.
2. FOR FOOTING DIMENSIONS, SEE DESIGN TABLES ON SIGN STRUCTURE DRG. CA-G3.
3. BARS SHALL NOT BE SPLICED EXCEPT AS PROVIDED ON THIS DRAWING OR AUTHORIZED BY THE ENGINEER. WHEN SPLICING IS APPROVED, THE REINFORCEMENT BARS SHALL BE LAPPED FOR A LENGTH OF AT LEAST 36 DIAMETERS AND SHALL BE SECURELY WIRED TOGETHER.
4. PILES SHALL BE CAST-IN-PLACE CONCRETE PILES WITH A MINIMUM BEARING CAPACITY EQUAL TO 214 KN.
5. PILE DESIGN SHALL CONFORM TO AASHTO SPECIFICATIONS FOR THE SEISMIC DESIGN OF HIGHWAY BRIDGES, SEISMIC PERFORMANCE CATEGORY B, SUBSECTION 6.3.1(C).
6. THE CASING OF THE CAST-IN-PLACE CONCRETE PILES SHALL BE LEFT IN PLACE AND SHALL BE DESIGNED TO RESIST BOTH DIRECT COMPRESSION AND BENDING. THE THICKNESS OF THE CASING SHALL BE NOT LESS THAN 5 MM.
7. THE LONGITUDINAL REINFORCING STEEL OF THE CAST-IN-PLACE CONCRETE PILES SHALL BE A MINIMUM OF 6-#16 BARS AND SHALL EXTEND THROUGH THE UPPER THIRD OF THE PILE OR 4.5 M DOWN INTO THE CASING, WHICHEVER IS GREATER, EMBEDDED INTO THE FOOTING WITH STANDARD HOOKS AS SHOWN.
8. THE SPIRAL REINFORCING FOR THE CAST-IN-PLACE CONCRETE PILES SHALL BE #13 BARS AND SHALL EXTEND THROUGH THE UPPER THIRD OF THE PILE OR 4.5 M DOWN FROM THE TOP OF THE CASING.
9. ALTERNATE FOUNDATION DESIGNS MAY BE CONSIDERED BY THE DESIGNER WHERE APPROPRIATE. LOADS FOR THE DESIGN OF NON-STANDARD FOUNDATIONS ARE AVAILABLE FROM THE BUREAU OF STRUCTURAL ENGINEERING.

NOTE: ALL DIMENSIONS SHOWN ON THIS SHEET ARE IN METRIC UNITS.

THIS PLATE FOR DESIGN INFORMATION ONLY. DO NOT INCLUDE IN CONTRACT PLANS.

SIGN STRUCTURE DRG. CA-G5

NEW JERSEY DEPARTMENT OF TRANSPORTATION
BUREAU OF STRUCTURAL ENGINEERING

CANTILEVER SIGN SUPPORT STANDARDS

FOOTING DESIGN TABLES AND DETAILS

SCALE : NONE

BRIDGE SHEET NO. OF

5 / 5

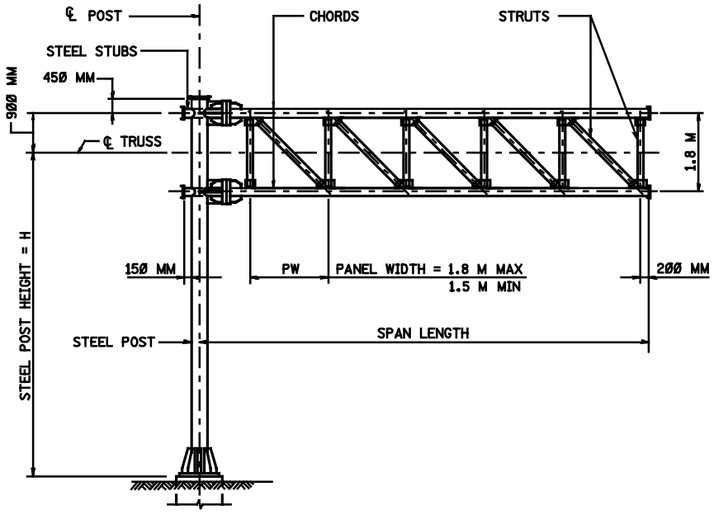

ELEVATION - TYPICAL CANTILEVER SIGN SUPPORT

(LOOKING UPSTATION)

SUMMARY OF QUANTITIES

PAY ITEM NO.	STANDARD ITEM NO.	DESCRIPTION	UNIT	CONTRACT QUANTITY
		CLEARING SITE, STRUCTURE	LUMP SUM	
		FOUNDATION EXCAVATION	C.M.	
		TEMPORARY SHEETING	S.M.	
		CONCRETE IN STRUCTURES, FOOTINGS	C.M.	
		REINFORCEMENT STEEL IN STRUCTURES	KG	

GENERAL NOTES

A. DESIGN CRITERIA

DESIGN SPECIFICATIONS

1996 AASHTO STANDARD SPECIFICATIONS FOR HIGHWAY BRIDGES (16TH EDITION) AS MODIFIED BY SECTION 3 AND SECTION 32 OF THE CURRENT NJDOT DESIGN MANUAL - BRIDGES AND STRUCTURES, AND 1994 AASHTO STANDARD SPECIFICATIONS FOR STRUCTURAL SUPPORTS FOR HIGHWAY SIGNS, LUMINAIRES AND TRAFFIC SIGNALS.

DESIGN LOADS

DESIGN WIND VELOCITY ---- 129 KM/H
DESIGN ICE LOAD --------- 144 PA

SEISMIC LOADS FOR SEISMIC PERFORMANCE CATEGORY (SPC) B, A=0.18, SOIL PROFILE IV (REF. 1996 AASHTO, DIVISION 1A).

FATIGUE LOADS

ALL STRUCTURAL DETAILS HAVE BEEN DESIGNED FOR FATIGUE RESISTANCE UNDER THE FOLLOWING FATIGUE LOADS:

1) NATURAL WIND GUSTS: Pnw = 250Cd (PA),
WHERE Cd IS THE DRAG COEFFICIENT SPECIFIED IN SECTION 1.2.5 OF THE 1994 STANDARD SPECIFICATIONS FOR STRUCTURAL SUPPORTS FOR HIGHWAY SIGNS, LUMINAIRES, AND TRAFFIC SIGNALS. NATURAL WIND GUST PRESSURE RANGE APPLIED IN THE HORIZONTAL DIRECTION TO THE AREA PROJECTED ON A VERTICAL PLANE OF ALL SUPPORT STRUCTURE MEMBERS, SIGN PANELS AND WALKWAYS.

2) TRUCK-INDUCED GUSTS: Ptg = 1760Cd (PA),
WHERE Cd IS THE DRAG COEFFICIENT SPECIFIED IN SECTION 1.2.5 OF THE 1994 STANDARD SPECIFICATIONS FOR STRUCTURAL SUPPORTS FOR HIGHWAY SIGNS, LUMINAIRES, AND TRAFFIC SIGNALS. TRUCK GUST PRESSURE RANGE APPLIED IN THE UPWARD VERTICAL DIRECTION ALONG THE FULL LENGTH OF THE TRUSS SPAN TO THE AREA PROJECTED ON A HORIZONTAL PLANE OF ALL SUPPORT STRUCTURE MEMBERS, SIGN PANELS, AND WALKWAYS.

VARIABLE MESSAGE SIGN (VMS) STRUCTURES

REFER TO SECTION 32 OF THE NJDOT DESIGN MANUAL - BRIDGES AND STRUCTURES WHEN FURNISHING SUPPORT STRUCTURES FOR VARIABLE MESSAGE SIGNS (VMS).

CONCRETE DESIGN STRESSES

SPECIFIED COMPRESSIVE STRENGTH (f'o) (CLASS B) ---- 21 MPA
EXTREME FIBER COMPRESSIVE STRESS (fc) ---------- 8.4 MPA

REINFORCEMENT STEEL DESIGN STRESS

TENSILE STRESS (fs) (A615/A615M, GRADE 420) ---- 165 MPA

STRUCTURAL STEEL DESIGN STRENGTHS

YIELD STRENGTH (Fy)
PIPES (A53, TYPE S OR TYPE E, GRADE B) ---- 240 MPA (MIN.)
---- 355 MPA (MAX.)

FOUNDATIONS

MAXIMUM FOUNDATION BEARING PRESSURE ---- 0.120 MPA
FOOTINGS ARE DESIGNED SUCH THAT A MINIMUM OF 75 PERCENT OF THE FOOTING IS ALWAYS IN CONTACT; A MAXIMUM OF 25 PERCENT OF THE FOOTING IS IN UPLIFT.

BEARING PILES SHALL BE CAST-IN-PLACE CONCRETE PILES WITH A MINIMUM BEARING CAPACITY EQUAL TO 214 KN.

CAMBER

PERMANENT CAMBER EQUAL TO L/1000 HAS BEEN PROVIDED IN ADDITION TO THE DEAD LOAD CAMBER.

B. MATERIALS

I. STEEL

STEEL PIPE SHALL BE CERTIFIED BY MILL TEST REPORT TO MEET ASTM SPECIFICATION A53, TYPE E OR S, GRADE B WITH THE EXCEPTION THAT API 5L, GRADE B MAY BE USED WHEN THE SPECIFIED WALL THICKNESS IS GREATER THAN 13 MM. ONLY ELECTRICAL RESISTANCE WELDED (ERW) MANUFACTURED SINGLE SEAM PIPE IS PERMITTED. HOWEVER, WHEN THE REQUIRED PIPE SIZE IS GREATER THAN 600 MM, DOUBLE SEAM PIPE MAY BE USED. A MILL TEST REPORT MUST BE PROVIDED, CERTIFIED AND SIGNED BY THE PIPE MANUFACTURER, CONTAINING PHYSICAL AND CHEMICAL PROPERTIES AND THE MANUFACTURING PROCESS USED TO PRODUCE THE PIPE.

ALL OTHER STEEL SHALL CONFORM TO ASTM SPECIFICATION A36/A36M GRADE 250 OR AASHTO M270/M270M GRADE 345 (ASTM A709/A709M). ALL THIS SPECIFICATION STEEL SHALL MEET SUPPLEMENTARY REQUIREMENTS FOR NOTCH TOUGHNESS (CHARPY TESTING, ZONE #2)

REFER TO SUBSECTION 509.02 OF THE NJDOT STANDARD SPECIFICATIONS FOR ADDITIONAL REQUIREMENTS.

UPON COMPLETION OF FABRICATION, THE FABRICATOR SHALL PROVIDE A NOTARIZED CERTIFICATION OF COMPLIANCE AS PER SECTION 106.04 OF THE NJDOT STANDARD SPECIFICATIONS, INCLUDING A LEGIBLE COPY OF ALL MILL TEST REPORTS FOR MATERIALS INCORPORATED INTO THE WORK.

STEEL ANCHOR BOLTS, NUTS AND WASHERS SHALL CONFORM TO ASTM SPECIFICATION F1554, GRADE 250. THE ANCHOR BOLTS SHALL BE HOT DIP GALVANIZED AS PER ASTM SPECIFICATION A153, CLASS C.

CHORD SPLICE ASSEMBLY FASTENERS SHALL BE HIGH STRENGTH STEEL CONFORMING TO ASTM SPECIFICATION A325M AND SHALL BE HOT DIP GALVANIZED AS PER ASTM SPECIFICATION A153, CLASS C. ALL OTHER FASTENERS SHALL BE STAINLESS STEEL CONFORMING TO ASTM SPECIFICATION A320/A320M, GRADE B8, CLASS 1.

CAPS FOR THE ENDS OF CHORDS AND TOPS OF POSTS SHALL BE STEEL CONFORMING TO ASTM SPECIFICATION A36/A36M AND SHALL BE HOT DIP GALVANIZED IN ACCORDANCE WITH ASTM SPECIFICATION A123.

WELDING OF STEEL SHALL BE AS SPECIFIED IN THE CONSTRUCTION SPECIFICATIONS.

AFTER COMPLETE FABRICATION, EACH STEEL SECTION SHALL BE HOT DIP GALVANIZED ACCORDING TO THE REQUIREMENTS OF ASTM SPECIFICATION A123, AS MODIFIED BY THE CONSTRUCTION SPECIFICATIONS. A SINGLE DIP GALVANIZING PROCESS IS PREFERRED IF SIZE PERMITS.

II. ALUMINUM

ALUMINUM SHALL CONFORM TO THE ASTM SPECIFICATIONS AND ALLOYS LISTED BELOW:

APPLICATION	ASTM SPECIFICATION	ASTM ALLOY
ROLLED OR EXTRUDED SHAPES	B308/B308M	6061 - T6
PLATES	B209M	6061 - T6
DRAWN SEAMLESS TUBES	B210M	6061 - T6
EXTRUDED TUBES	B221M	6061 - T6

WELDING OF ALUMINUM SHALL BE AS SPECIFIED IN THE CONSTRUCTION SPECIFICATIONS.
THE SIGN PANEL SHALL BE INSTALLED LEVEL. THE CONTRACTOR SHALL FIELD DRILL THE SIGN SUPPORTS AS REQUIRED TO ACHIEVE THIS.

III. REINFORCEMENT STEEL

ALL REINFORCEMENT STEEL SHALL BE ASTM A615/A615M, GRADE 420.

IV. CONCRETE

ALL CONCRETE SHALL BE "CONCRETE IN STRUCTURES, FOOTINGS", UNLESS OTHERWISE SPECIFIED BY THE DESIGNER.

INDEX OF DRAWINGS

DRG. NO.	DESCRIPTION
CA-D1	GENERAL NOTES AND ELEVATION
CA-D2	STRUCTURE AND FOUNDATION SCHEDULES
CA-D3	FOUNDATION DETAILS
CA-D4	TRUSS AND POST DETAILS - SHEET 1
CA-D5	TRUSS AND POST DETAILS - SHEET 2
CA-D6	POST BASE AND FOUNDATION DETAILS
CA-D7	MAINTENANCE WALKWAY DETAILS
CA-D8	TYPICAL ELECTRICAL DETAILS

NOTE: ALL DIMENSIONS SHOWN ON THIS SHEET ARE IN METRIC UNITS.

SIGN STRUCTURE DRG. CA-D1

NEW JERSEY DEPARTMENT OF TRANSPORTATION
BUREAU OF STRUCTURAL ENGINEERING

CANTILEVER SIGN SUPPORT STRUCTURES
GENERAL NOTES AND ELEVATION

ROUTE: SECTION:

SCALE : NONE

BRIDGE SHEET NO. OF

CONTROL SECTION		JOB NO.	
DES. BY		CHK. BY	
DWN. BY			
EST. BY		CHK. BY	
SPECS. BY			

IN CHARGE OF

BRIDGE DE ORIGINAL SHEET

CANTILEVER SIGN SUPPORTS - SCHEDULE OF STRUCTURES

SIGN SUPPORTS			ELEVATIONS		SPAN LENGTH (M)	PANEL WIDTH PW (M)	STEEL TRUSS				STEEL POST		
STRUCTURE No.	GO Nos.	STATION	℄ TRUSS (M)	BOTTOM OF BASE PLATE (M)			CHORDS O.D.xTHICK (MM)	STRUTS O.D.xTHICK (MM)	STEEL STUBS O.D.xTHICK (MM)	CAMBER (MM)	H = 8 M O.D.xTHICK (MM)	H = 10 M O.D.xTHICK (MM)	H = 12 M O.D.xTHICK (MM)

NOTE:
ALL ELEVATIONS SHALL BE VERIFIED IN THE FIELD PRIOR TO FABRICATION AND CONSTRUCTION.

CANTILEVER SIGN SUPPORTS - SCHEDULE OF FOUNDATIONS

STRUCTURE No.	FOOTING														PEDESTAL											BARRIER PEDESTAL																				TOTAL WT OF COR. PROT. RE-BARS (KG)	TOTAL WEIGHT OF ALL REBAR TYPES (KG)	TOTAL VOLUME OF CONC (C.M.)
	SIZE FLxFW (M)	ELEV BOT OF FTG (M)	VOLUME				No. OF PILES IN ROW		PILE LGTH (M)	REINFORCING BARS No. & SIZE				WT OF RE-BARS (KG)	SIZE PD (MM)	PED HT (M)	ELEV TOP OF PED (M)	VOL OF CONC (C.M.)	VERT REBARS TYPE "P-1"			SPIRAL REBARS TYPE "P-2"			WT OF COR. PROT. RE-BARS (KG)	SIZE BWT (MM)	BAR-RIER HT (M)	ELEV TOP OF BARR (M)	VOL OF CONC (C.M.)	VERT REBARS TYPE "P-1"		SPIRAL REBARS TYPE "P-2"			STANDARD BARRIER REBARS TYPE "B-1"		TYPE "B-2"				TYPE "B-3"				WT OF COR. PROT. RE-BARS (KG)			
			CONCRETE WITH PILES (C.M.)	CONCRETE W/O PILES (C.M.)	EXCAVATION WITH PILES (C.M.)	EXCAVATION W/O PILES (C.M.)	"X"	"Y"		FLB	FWB	FLT	FWT						No. & SIZE	A (MM)	LGTH (MM)	No. & SIZE	SD (MM)	LGTH (MM)						No. & SIZE	LGTH (MM)	No. & SIZE	SD (IN)	LGTH (MM)	No. & SIZE	LGTH (MM)	No. & SIZE	D (MM)	C (MM)	LGTH (MM)	No. & SIZE	E (MM)	F (MM)	LGTH (MM)				

TYPE "B-1" TYPE "B-2" TYPE "B-3" TYPE "P-1" TYPE "P-2"

REBAR SHAPES

NOTE: ALL DIMENSIONS SHOWN ON THIS SHEET ARE IN METRIC UNITS.

SIGN STRUCTURE DRG. CA-D2

NEW JERSEY DEPARTMENT OF TRANSPORTATION
BUREAU OF STRUCTURAL ENGINEERING

CANTILEVER SIGN SUPPORT STRUCTURES
STRUCTURE AND FOUNDATION SCHEDULES

ROUTE: SECTION:

SCALE : NONE

BRIDGE SHEET NO. OF

CONTROL SECTION ______ JOB NO.______

DES. BY | CHK. BY
DWN. BY
EST. BY | CHK. BY
SPECS. BY

IN CHARGE OF ______

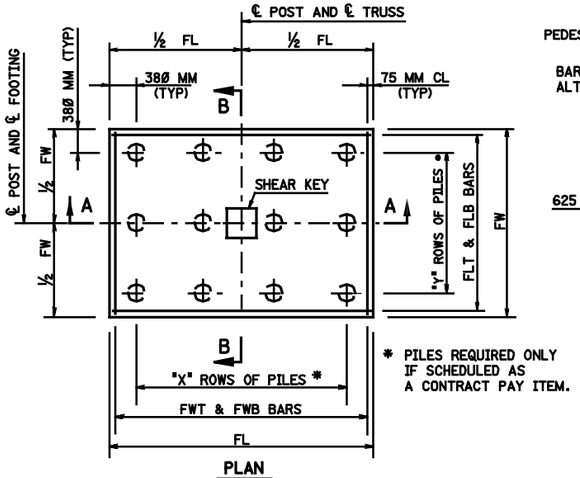

PLAN

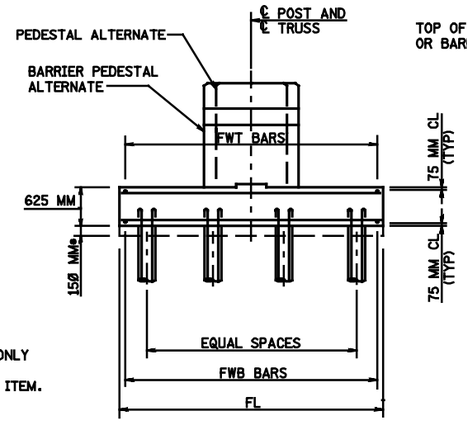

SECTION A-A

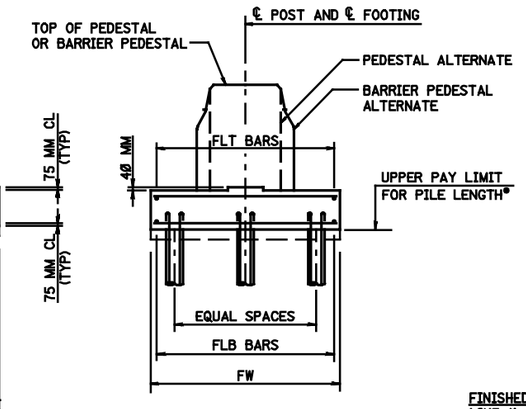

SECTION B-B

FOOTING

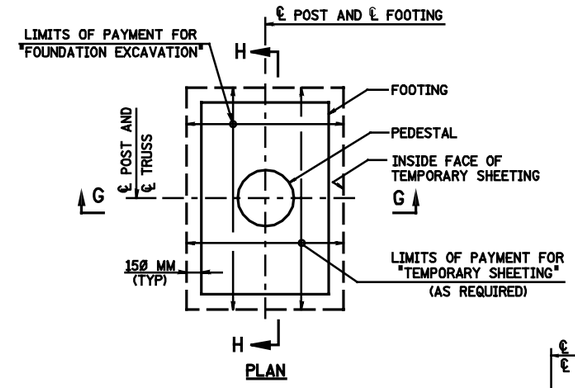

PLAN

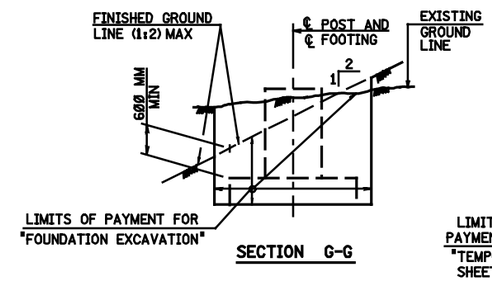

SECTION G-G

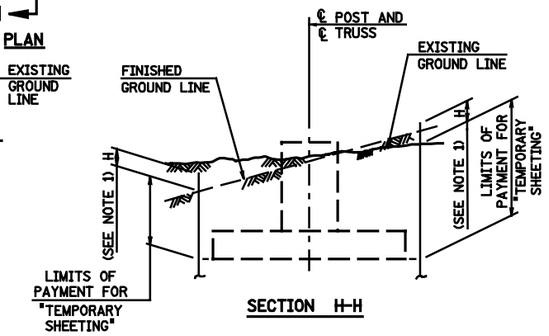

SECTION H-H

TEMPORARY SHEETING AND EXCAVATION DETAILS

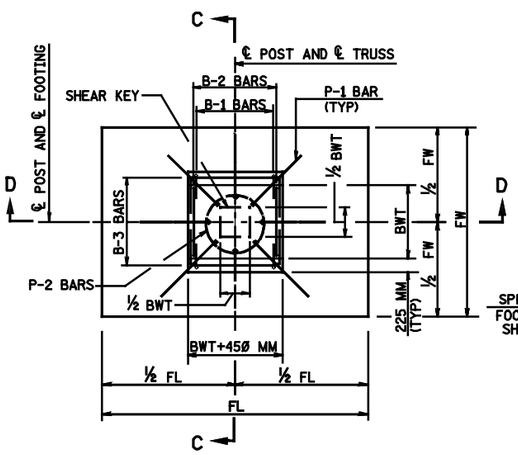

PLAN

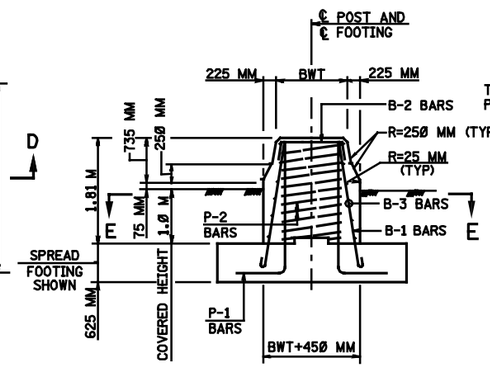

SECTION C-C

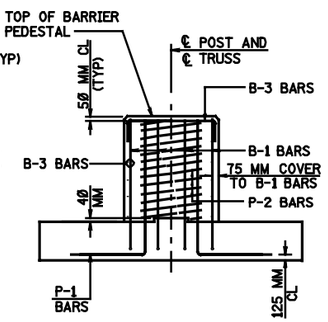

SECTION D-D

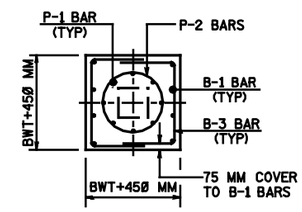

SECTION E-E

BARRIER PEDESTAL

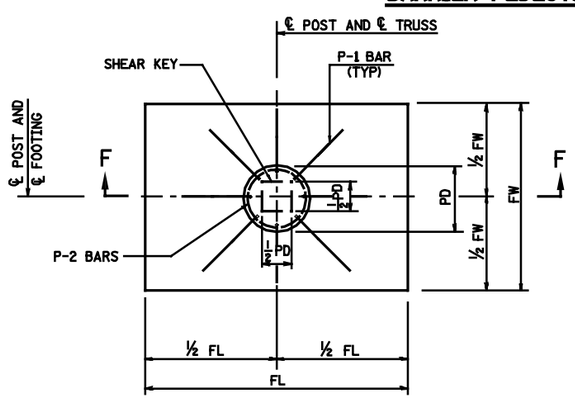

PLAN

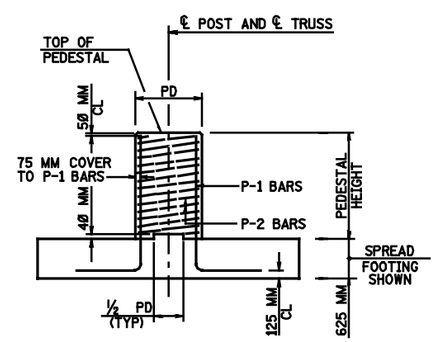

SECTION F-F

PEDESTAL

NOTES:

1. WHEN TEMPORARY SHEETING IS REQUIRED, H IS 1.0 M WHEN ADJACENT TO PEDESTRIAN OR VEHICULAR TRAFFIC AND 0.3 M MINIMUM FOR ALL OTHER CONDITIONS.
2. PAYMENT LIMITS FOR TEMPORARY SHEETING SHALL BE MEASURED FROM THE FINISHED GRADE LINE OR FROM THE EXISTING GROUND LINE, WHICHEVER IS LOWER.
3. EXPOSED CONCRETE EDGES SHALL BE CHAMFERED 25 X 25 MM UNLESS NOTED OTHERWISE.
4. BARS SHALL NOT BE SPLICED EXCEPT AS PROVIDED ON THIS DRAWING OR AUTHORIZED BY THE ENGINEER. WHEN SPLICING IS APPROVED, THE REINFORCEMENT BARS SHALL BE LAPPED FOR A LENGTH OF AT LEAST 36 DIAMETERS (48 DIAMETERS FOR SPIRAL BARS) AND SHALL BE SECURELY WIRED TOGETHER.
5. FOR DETAILS OF CAST-IN-PLACE CONCRETE PILES, SEE SIGN STRUCTURE DRG. CA-D6.
6. ALL REINFORCEMENT IN PEDESTALS AND BARRIER PEDESTALS SHALL BE CORROSION PROTECTED.

NOTE: ALL DIMENSIONS SHOWN ON THIS SHEET ARE IN METRIC UNITS.

SIGN STRUCTURE DRG. CA-D3

NEW JERSEY DEPARTMENT OF TRANSPORTATION
BUREAU OF STRUCTURAL ENGINEERING

CANTILEVER SIGN SUPPORT STRUCTURES FOUNDATION DETAILS

ROUTE: SECTION:

SCALE : NONE

BRIDGE SHEET NO. OF

8/02/03 - ORIGINAL SHEET

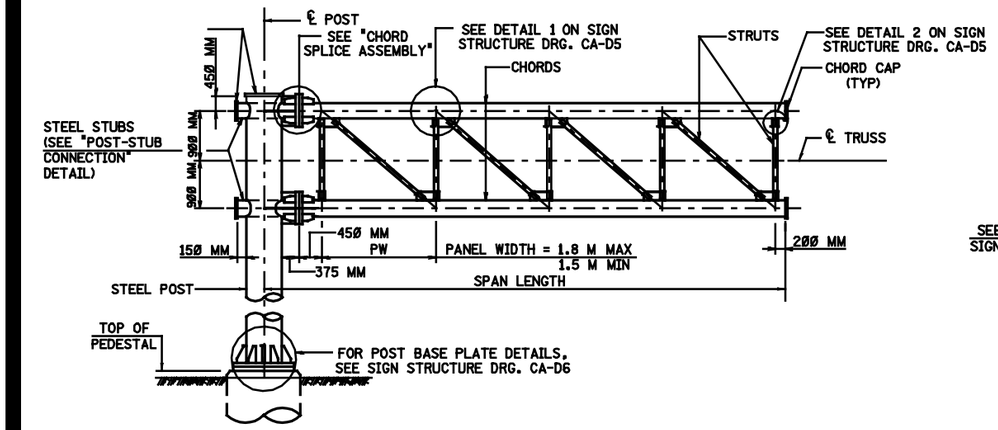

ELEVATION -TYPICAL CANTILEVER SIGN SUPPORT

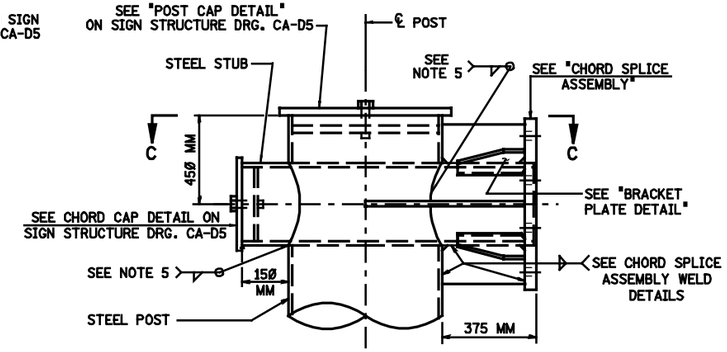

POST-STUB CONNECTION

(TWELVE-BOLT SPLICE SHOWN)

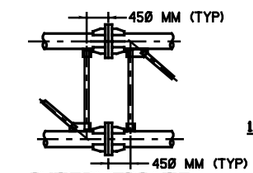

INTERMEDIATE SPLICE DETAIL

(SEE NOTE No. 4)

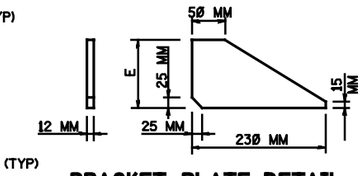

BRACKET PLATE DETAIL

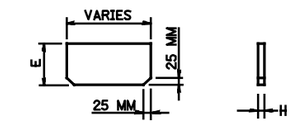

VERTICAL STUB STIFFENER DETAIL

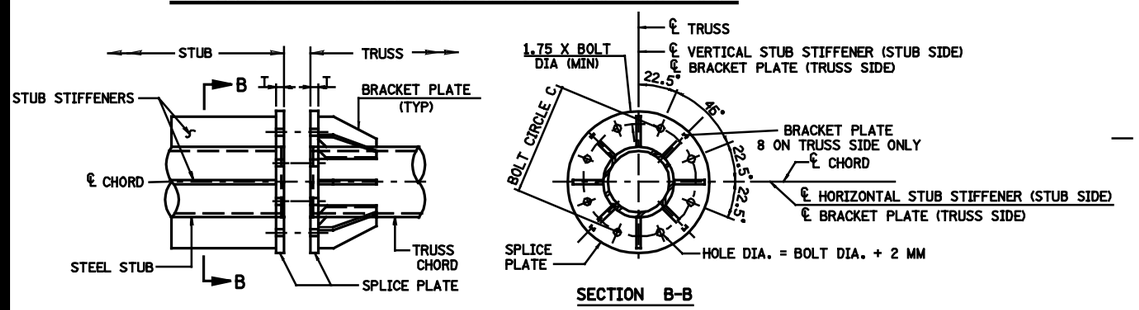

SECTION B-B

CHORD SPLICE ASSEMBLY - EIGHT-BOLT

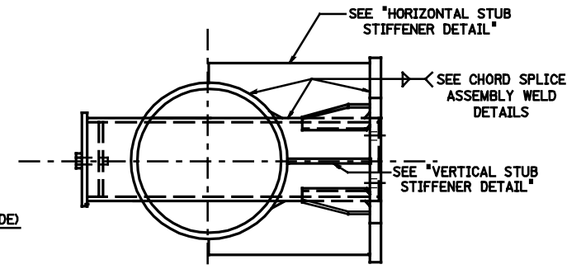

SECTION C - C

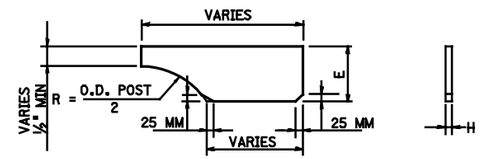

HORIZONTAL STUB STIFFENER DETAIL

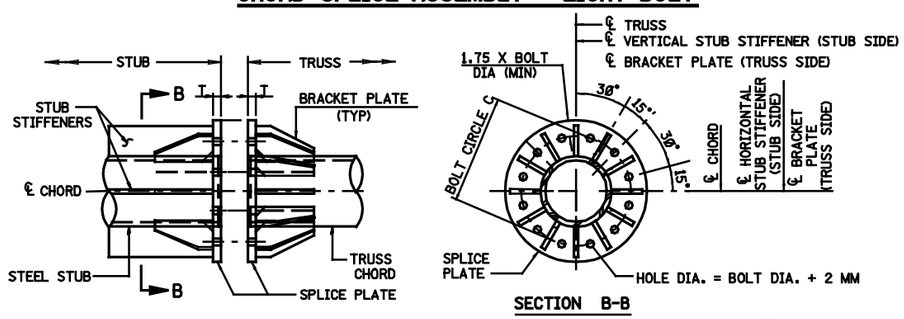

SECTION B-B

CHORD SPLICE ASSEMBLY - TWELVE-BOLT

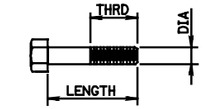

SPLICE BOLT DETAIL

(A325M)

TRUSS CHORD SPLICE ASSEMBLY

CHORD O.D.xTHICK (MM)	SPLICE PLATES THICKNESS T (MM)	STUB STIFFENER PLATES E (MM)	STUB STIFFENER PLATES H (MM)	SPLICE BOLTS No. OF BOLTS	SPLICE BOLTS BOLT CIRCLE C (MM)	SPLICE BOLTS DIAMETER (MM)	SPLICE BOLTS BOLT TENSION (KN)
219.1x8.2	38	120	16	8	400	24	226.9
219.1x12.7	38	120	16	8	400	24	226.9
323.9x9.5	38	165	16	12	580	27	249.1
323.9x12.7	38	165	16	12	580	27	249.1
457.2x9.5	57	150	16	12	680	36	458.2
457.2x12.7	57	150	20	12	680	36	458.2

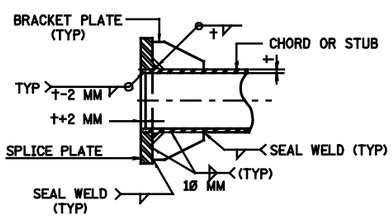

NOTES:

1. HOLE SIZE H INDICATED IN TABLES IS THE DRILLED FULL SIZE AS PER AASHTO 11.4.8 (DIVISION II).
2. A325M SPLICE BOLTS SHALL BE HEAVY HEXAGON TYPE AND SHALL BE FURNISHED WITH HEAVY HEXAGON NUTS AND WASHERS.
3. THE THREADED PORTION OF THE SPLICE BOLTS SHALL BE EXCLUDED FROM THE SHEAR PLANE OF THE SPLICE.
4. CHORD INTERMEDIATE SPLICING WILL NOT BE PERMITTED UNLESS AUTHORIZED BY THE ENGINEER. WHEN INTERMEDIATE SPLICING IS AUTHORIZED, THE SPLICE SHALL BE AS SHOWN ON THE INTERMEDIATE SPLICE DETAIL AND AS PER CHORD SPLICE ASSEMBLY TABLE ON THIS PLATE.
5. IF FILLET WELD SIZE IS NOT SHOWN ON DETAILS, THE WELD SIZE SHALL BE THE SAME AS THE THICKNESS OF THE THINNER PART BEING JOINED.
6. FOR THE OUTSIDE DIAMETER (O.D.) OF THE STEEL STUB PIPE SEE SCHEDULE OF STRUCTURES ON SIGN STRUCTURE DRG. CA-D2.
7. THE PROVISIONS OF SUBSECTION 509.09 OF THE NJDOT STANDARD SPECIFICATIONS SHALL BE FOLLOWED IN FURNISHING THE REQUIRED SPLICE ASSEMBLY.
8. REFER TO SUBSECTION 509.08 OF THE NJDOT STANDARD SPECIFICATIONS FOR THE SPLICE BOLT TIGHTENING PROCEDURES. WHEN CALIBRATED WRENCHES ARE USED FOR BOLT INSTALLATION, THEY SHALL BE SET TO PROVIDE A TENSION THAT IS SPECIFIED IN THE TABLE ABOVE.
9. HORIZONTAL AND VERTICAL STUB STIFFENER PLATE DIMENSIONS MAY BE VARIED TO ACCOUNT FOR CAMBER (SEE CAMBER DETAIL ON SIGN STRUCTURE DRG. CA-D5).

NOTE: ALL DIMENSIONS SHOWN ON THIS SHEET ARE IN METRIC UNITS.

SIGN STRUCTURE DRG. CA-D4

NEW JERSEY DEPARTMENT OF TRANSPORTATION
BUREAU OF STRUCTURAL ENGINEERING

CANTILEVER SIGN SUPPORT STRUCTURES
TRUSS AND POST DETAILS - SHEET 1

ROUTE: SECTION:

SCALE : NONE

BRIDGE SHEET NO. OF

BRCOD 06 ORIGINAL SHEET

THE FOLLOWING TABLES ARE PROVIDED TO FACILITATE FABRICATION OF SIGN SUPPORT STRUCTURES AND TO AID THE DESIGNER IN CHECKING SHOP DRAWING SUBMISSION.

THE CUSTOMARY U.S. SIZES SHOWN IN THESE TABLES ARE NOT NECESSARILY EQUIVALENT TO THE METRIC SIZES BUT MAY BE USED AS ACCEPTABLE SUBSTITUTIONS, IF MATERIAL WITH CUSTOMARY U.S. SIZES IS PROVIDED BY THE FABRICATOR, ADJUSTMENTS TO RELATED DIMENSIONS WILL BE REQUIRED.

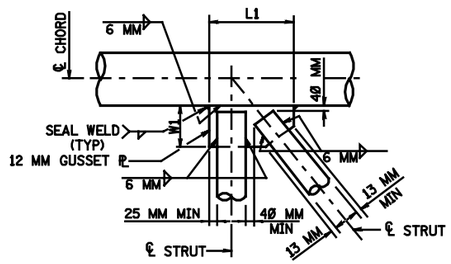

DETAIL 1
('K' GUSSET)

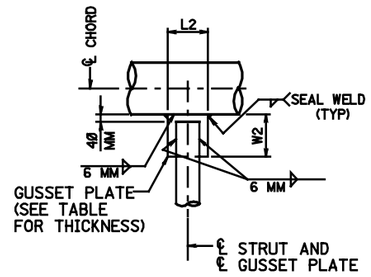

DETAIL 2
('T' GUSSET)

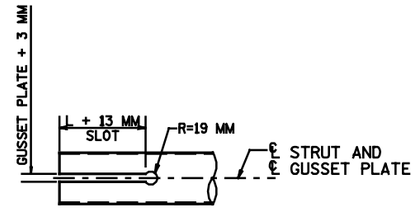

DETAIL A

STEEL PLATE THICKNESS	
METRIC (MM)	CUSTOMARY U.S. UNITS (INCHES)
3	1/8
4	1/4
6	1/4
8	3/8
10	3/8
12	1/2
14	5/8
16	5/8
18	3/4
20	3/4
22	7/8
24	1
26	1
28	1 1/8
30	1 1/4
32	1 1/4
34	1 3/8
36	1 1/2
38	1 1/2
40	1 5/8
45	1 3/4
50	2
55	2 1/4
60	2 1/2
70	2 3/4
80	3 1/4

BOLT DIAMETER	
METRIC (MM)	CUSTOMARY U.S. UNITS (INCHES)
M6	1/4
M10	3/8
M12	1/2
M16	5/8
M20	3/4
M22	7/8
M24	1
M27	1 1/8
M30	1 1/4
M36	1 1/2
M45	1 3/4
M50	2
M55	2 1/4
M60	2 1/2
M65	2 3/4
M70	2 3/4
M75	3
M80	3 1/4

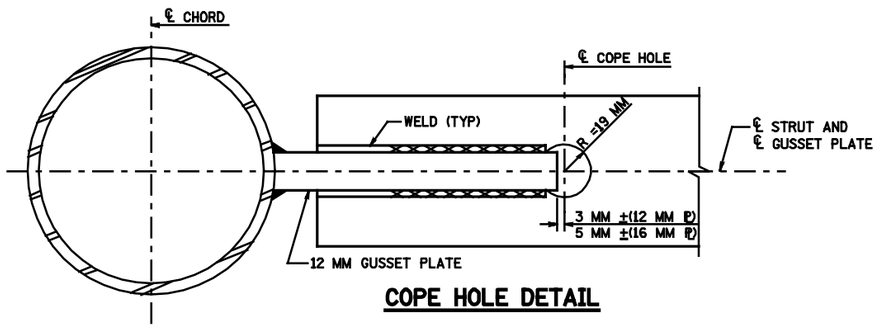

COPE HOLE DETAIL

NOTE:
COPE HOLES TO BE PROVIDED AT BOTH ENDS AND BOTH FACES OF ALL STRUTS.

TRUSS GUSSET PLATES					
CHORD O.D.×THICK (MM)	'K' GUSSET (1/2" THICK)		'T' GUSSET		
	L1 (MM)	W1 (MM)	L2 (MM)	W2 (MM)	THICKNESS (MM)
219.1X8.2	330	160	130	160	12
219.1X12.7	350	160	130	160	12
323.9X9.5	405	175	160	175	12
323.9X12.7	480	185	230	185	12
457.2X9.5	540	210	260	210	12
457.2X12.7	620	225	370	225	16

REINFORCEMENT BAR SIZE	
METRIC BAR DESIGNATION	INCH-POUND BAR SIZE DESIGNATION
#10	#3
#13	#4
#16	#5
#19	#6
#22	#7
#25	#8
#29	#9
#32	#10
#36	#11
#43	#14
#57	#18

NOTE: SEE SECTION 26 OF DESIGN MANUAL - BRIDGES AND STRUCTURES FOR BAR DESIGNATIONS.

WELD SIZE	
METRIC (MM)	CUSTOMARY U.S. UNITS (INCHES)
3	1/8
4	3/16
5	3/16
6	1/4
7	5/16
8	5/16
9	3/8
10	3/8
12	1/2
14	9/16
16	5/8
18	3/4
20	13/16
22	7/8
24	1
25	1

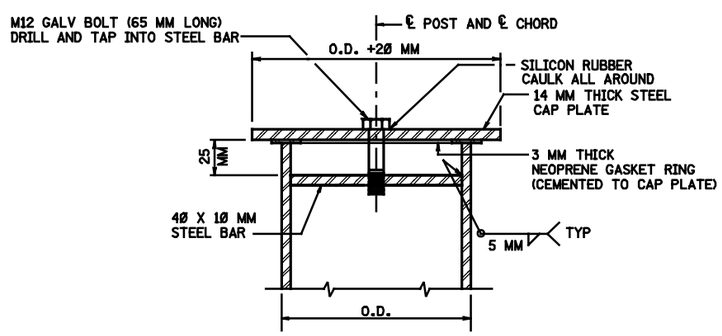

POST OR CHORD CAP DETAIL

NOTE: ALTERNATE CAP DETAILS MAY BE SUBMITTED TO THE ENGINEER FOR APPROVAL.

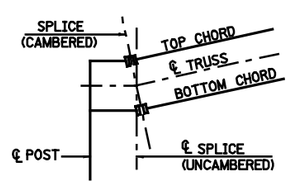

CAMBER DETAIL

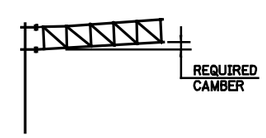

CAMBER DIAGRAM

CAMBER NOTE:

CAMBER SHALL BE OBTAINED BY SHORTENING THE TOP CHORD STUB LENGTH AND LENGTHENING THE BOTTOM CHORD STUB LENGTH. CHORD SPLICE PLATES SHALL BE SKEWED ACCORDINGLY BEFORE WELDING TO CHORDS. NO FORCE SHALL BE APPLIED IN PROVIDING CAMBER. AN ALTERNATE METHOD OF OBTAINING CAMBER MAY BE USED AS APPROVED BY THE ENGINEER. FOR REQUIRED CAMBER, SEE SCHEDULE OF STRUCTURES ON SIGN STRUCTURE DRG. CA-D2.

NOTE: ALL DIMENSIONS SHOWN ON THIS SHEET ARE IN METRIC UNITS.

SIGN STRUCTURE DRG. CA-D5

NEW JERSEY DEPARTMENT OF TRANSPORTATION
BUREAU OF STRUCTURAL ENGINEERING

CANTILEVER SIGN SUPPORT STRUCTURES
TRUSS AND POST DETAILS - SHEET 2

ROUTE: SECTION:

SCALE : NONE

BRIDGE SHEET NO. OF

BRC001.dgn ORIGINAL SHEET

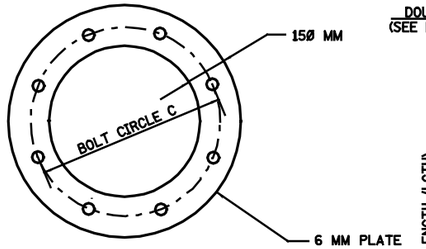

TEMPLATE PLATE DETAIL

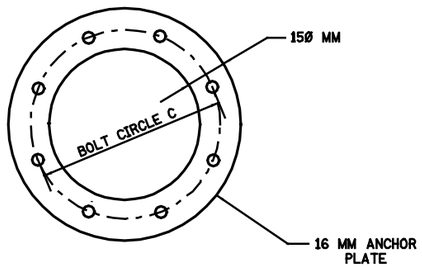

ANCHOR PLATE DETAIL

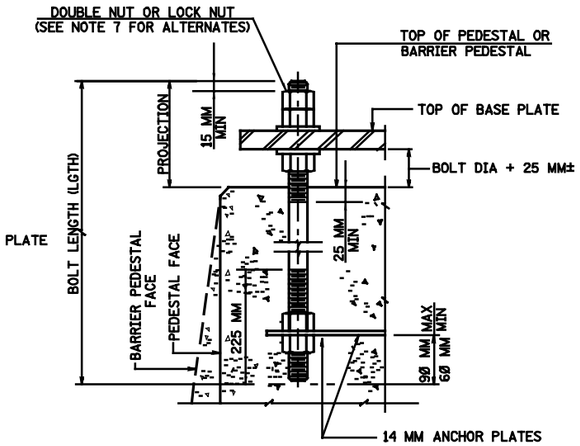

ANCHOR BOLT DETAIL

POST SHAFT BASE ASSEMBLY						
	BASE PLATE	BRACKET PLATES	ANCHOR BOLTS			
POST O.D.xTHICK (MM)	THICKNESS T (MM)	E (MM)	BOLT CIRCLE C (MM)	SIZE DIAxLGTH (MM)	BOLT TENSION (KN)	PROJ• (MM)
355.6x12.7	45	170	550	50x1340	451.5	240
406.4x12.7	45	180	600	55x1460	586.9	260
457.2x12.7	45	180	650	55x1460	586.9	260
508.0x12.7	50	185	700	60x1590	653.1	280
558.8x12.7	50	200	760	65x1710	722.4	300
609.6x12.7	50	215	825	70x1830	890.4	310
660.4x12.7	55	230	900	70x1840	890.4	320
660.4x15.9	55	235	900	75x1950	1078.2	330
660.4x19.1	60	245	900	80X2080	1177.7	340
660.4x22.2	70	270	900	80X2090	1177.7	340

• PROJECTION LENGTH SHOWN IS BASED ON USING DOUBLE NUTS.

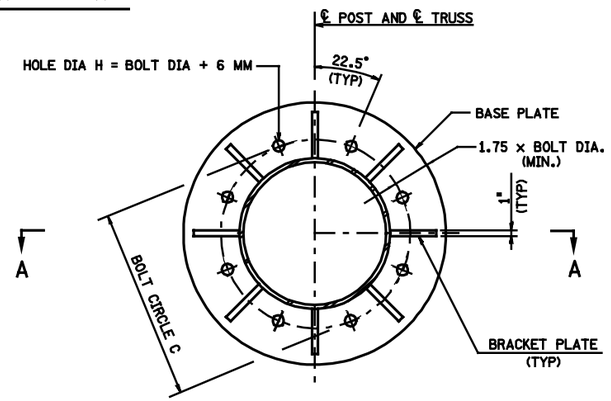

PLAN

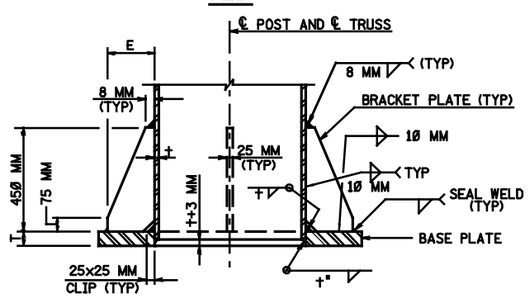

SECTION A-A

POST BASE PLATE DETAIL

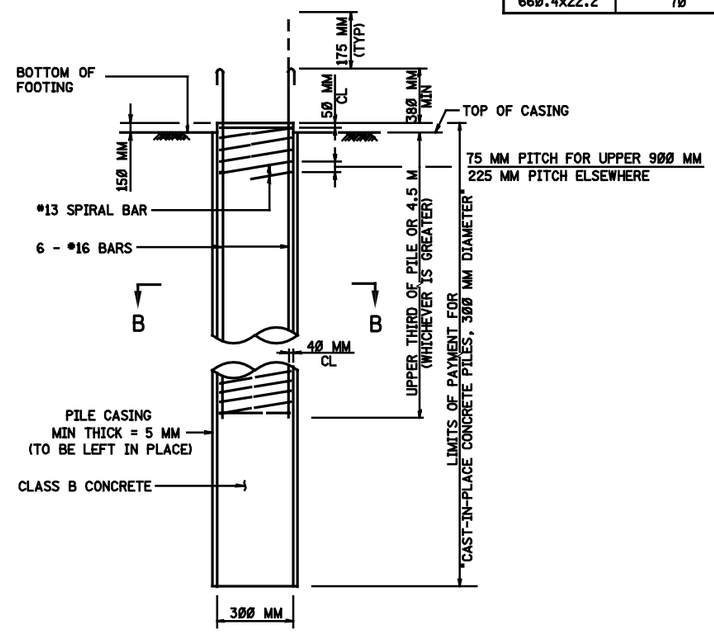

ELEVATION

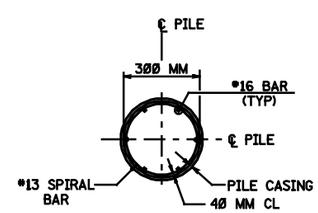

SECTION B-B

CAST-IN-PLACE CONCRETE PILE

NOTES:

1. BEARING PILES SHALL BE CAST-IN-PLACE CONCRETE PILES. ALL PILES SHALL BE 300 MM IN DIAMETER OR EQUIVALENT AND SHALL HAVE A MINIMUM BEARING CAPACITY OF 214 KN. THE NUMBER AND SPACING OF PILES SHALL BE AS INDICATED ON SIGN STRUCTURE DRG. CA-D3.
2. PILE DESIGN SHALL CONFORM TO AASHTO SPECIFICATIONS FOR THE SEISMIC DESIGN OF HIGHWAY BRIDGES, SEISMIC PERFORMANCE CATEGORY B, SUBSECTION 6.3.1 (C).
3. APPROVED METAL SPACERS SHALL BE ATTACHED TO THE TOP AND BOTTOM SPIRALS TO ENSURE THAT THE REQUIRED CLEAR DISTANCE TO THE CASING IS MAINTAINED.
4. NO CONCRETE SHALL BE PLACED IN CAST-IN-PLACE PILES UNTIL AFTER ALL PILE CASINGS FOR THE FOOTING HAVE BEEN DRIVEN.
5. ANCHOR BOLTS SHALL BE PROVIDED WITH FOUR HEAVY HEXAGON NUTS AND TWO WASHERS AS SHOWN ON THE ANCHOR BOLT DETAIL.
6. ANCHOR BOLTS SHALL BE GALVANIZED AFTER THREADING.
7. REFER TO SUBSECTION 509.08 OF THE NJDOT STANDARD SPECIFICATIONS FOR ANCHOR BOLT TIGHTENING PROCEDURES. WHEN CALIBRATED WRENCHES ARE USED FOR BOLT INSTALLATION, THEY SHALL BE SET TO PROVIDE THE TENSION THAT IS SPECIFIED IN THE TABLE ABOVE.
8. TEMPLATE PLATE WITH NUTS ON BOTH SIDES SHALL BE USED TO MAINTAIN THE SPACING AND ALIGNMENT OF ANCHOR RODS.

NOTE: ALL DIMENSIONS SHOWN ON THIS SHEET ARE IN METRIC UNITS.

SIGN STRUCTURE DRG. CA-D6

NEW JERSEY DEPARTMENT OF TRANSPORTATION
BUREAU OF STRUCTURAL ENGINEERING

CANTILEVER SIGN SUPPORT STRUCTURES
POST BASE AND FOUNDATION DETAILS

ROUTE: SECTION:

SCALE : NONE

BRIDGE
SHEET NO. OF

BC2009.06 ORIGINAL SHEET

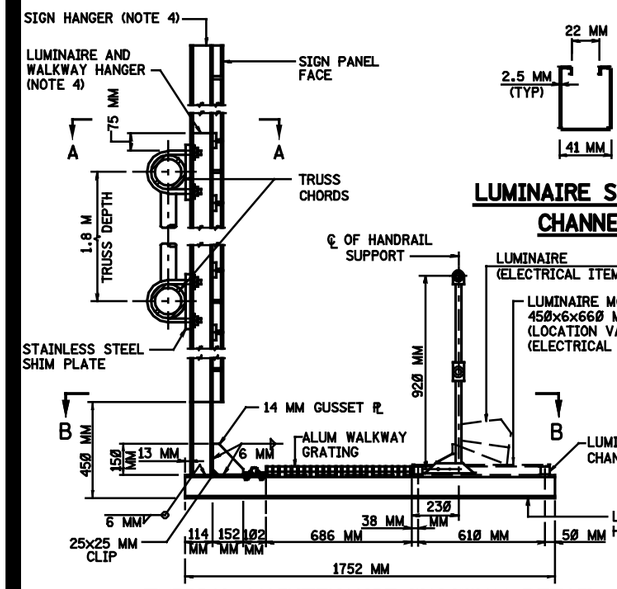

TYPICAL MAINTENANCE WALKWAY DETAIL

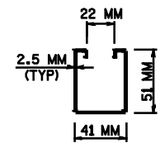

LUMINAIRE SUPPORT CHANNEL

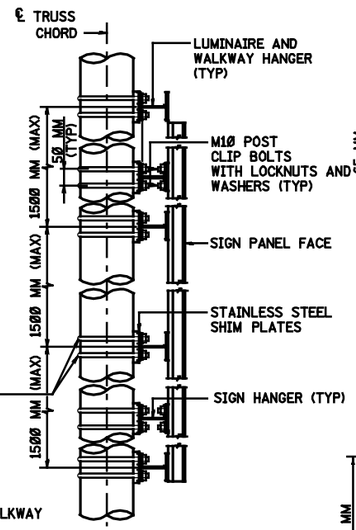

SECTION A-A

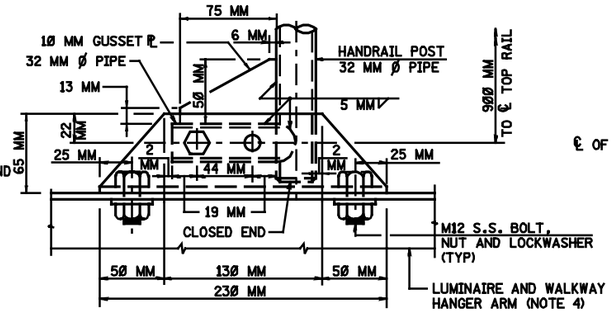

ELEVATION

HANDRAIL HINGE DETAIL "C"

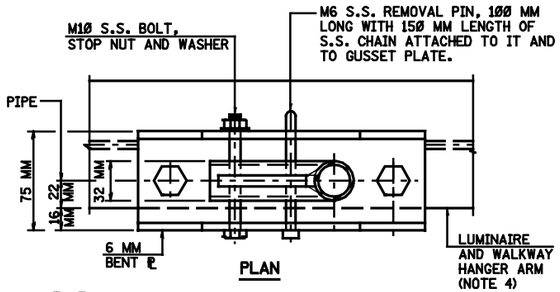

PLAN

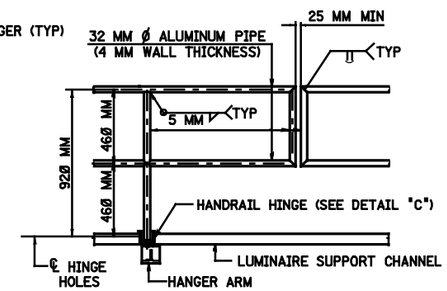

ELEVATION OF HANDRAIL

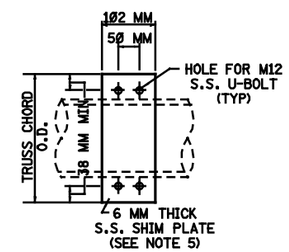

SHIM PLATE DETAIL

NOTES

1. ALL MATERIAL SHALL BE ALUMINUM ALLOY 6061-T6 UNLESS OTHERWISE NOTED.
2. ALL SHIM PLATES, BOLTS, U-BOLTS, WASHERS AND NUTS SHALL BE STAINLESS STEEL CONFORMING TO ASTM SPECIFICATION A320/A320M GRADE B8, CLASS 1.
3. WELDING OF ALUMINUM SHALL BE AS SPECIFIED IN THE CONSTRUCTION SPECIFICATIONS.
4. ALUMINUM I-BEAM (DEPTH = 102 MM, WEB AND FLANGE THICKNESS = 6 MM, FLANGE WIDTH = 89 MM). SIGN HANGER SPACING DESIGNED FOR 4.6 M MAXIMUM SIGN PANEL HEIGHT.
5. IF INTERMEDIATE TRUSS CHORD SPLICES ARE USED, THE THICKNESSES OF SHIM PLATES MUST BE INCREASED TO AVOID INTERFERENCE BETWEEN THE CHORD SPLICE PLATES AND THE SIGN PANELS.
6. MAINTENANCE WALKWAY, RAILING AND LUMINAIRE SUPPORTS SHALL BE PROVIDED CONTINUOUSLY FOR THE ENTIRE SIGN DESIGN LENGTH UNLESS OTHERWISE SHOWN.
7. MINIMUM SECTION MODULUS OF ALUMINUM WALKWAY GRATING SHALL BE 72580 CU. MM. PER METER WIDTH. WALKWAY GRATING SHALL NOT CANTILEVER MORE THAN 300 MM BEYOND HANGER ARMS AT EACH END OF THE MAIN WALKWAY. WALKWAY GRATING SHALL BE CONTINUOUS OVER A MINIMUM OF TWO SPANS.
8. ALTERNATE PIPE FITTINGS FOR HANDRAIL MAY BE SUBMITTED TO THE ENGINEER FOR APPROVAL.
9. ALL PIPES FOR HANDRAIL SHALL BE 32 MM NOMINAL DIA. WITH 4 MM WALL THICKNESS.
10. MAXIMUM LENGTH OF HANDRAIL SECTION SHALL BE 3050 MM AND SHALL INCLUDE TWO POSTS.
11. ALTERNATE HANDRAIL HINGE DETAILS MAY BE SUBMITTED TO THE ENGINEER FOR APPROVAL.
12. LUMINAIRE AND WALKWAY HANGERS SHALL PROJECT 75 MM ABOVE THE TOP OF THE TOP CHORD AND SHALL NOT SUPPORT SIGN PANELS.
13. LENGTH OF SIGN HANGERS SHALL BE EQUAL TO THE SIGN PANEL HEIGHT.
14. SIGN HANGERS SHALL BE USED TO SUPPORT SIGN PANELS ONLY.
15. EXIT PANEL CONNECTION DETAIL SHOWN SHALL ALSO BE USED FOR THE ATTACHMENT OF NEW EXIT PANELS TO EXISTING SIGN PANELS.
16. SIGN PANELS SHALL NOT EXTEND MORE THAN 900 MM BEYOND THE LAST SIGN HANGER. MAINTENANCE WALKWAYS SHALL NOT NOT EXTEND MORE THAN 300 MM BEYOND THE LAST WALKWAY HANGER.

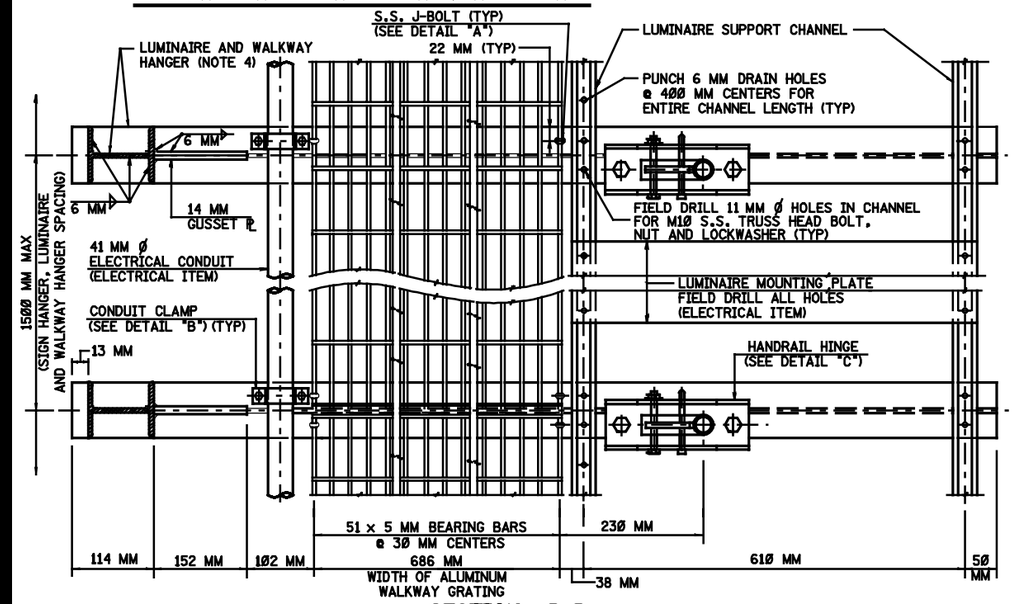

SECTION B-B

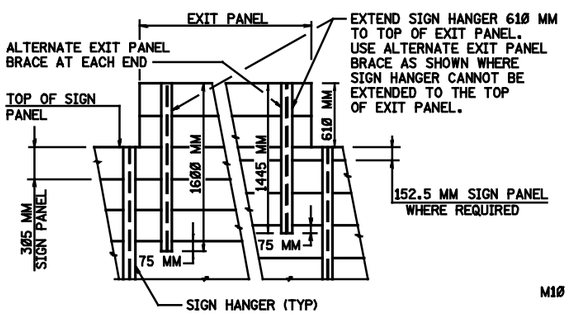

EXIT PANEL CONNECTION DETAIL

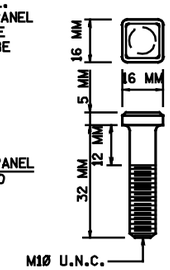

POST CLIP BOLT

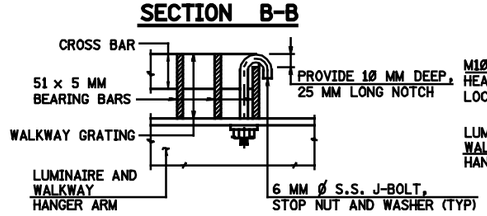

DETAIL "A"

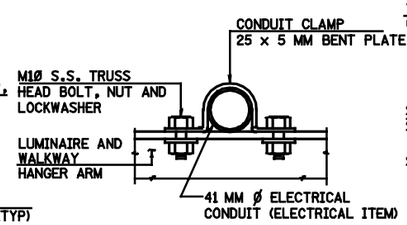

DETAIL "B"

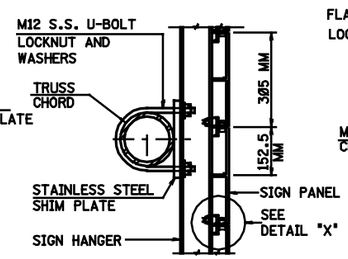

SIGN PANEL CONNECTION DETAIL

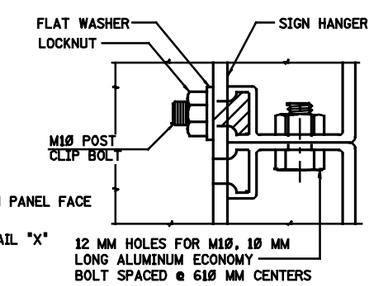

DETAIL "X"

NOTE: ALL DIMENSIONS SHOWN ON THIS SHEET ARE IN METRIC UNITS.

SIGN STRUCTURE DRG. CA-D7

NEW JERSEY DEPARTMENT OF TRANSPORTATION
BUREAU OF STRUCTURAL ENGINEERING

CANTILEVER SIGN SUPPORT STRUCTURES MAINTENANCE WALKWAY DETAILS

ROUTE: SECTION:

SCALE : NONE

BRIDGE SHEET NO. OF

RECORD DG ORIGINAL SHEET

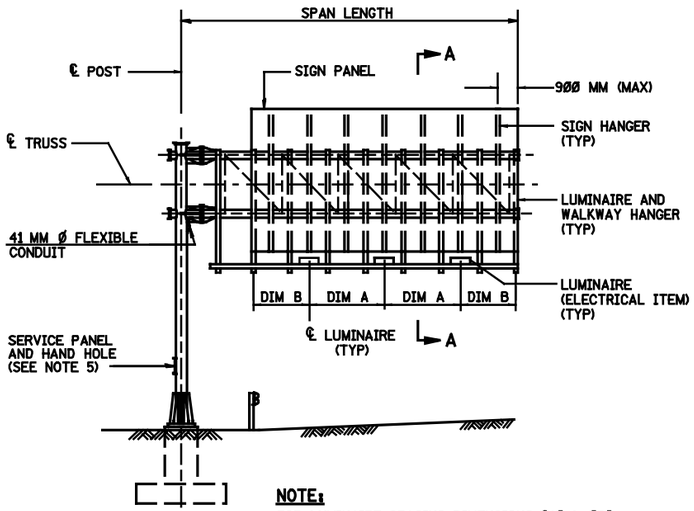

NOTE:
FOR LUMINAIRE SPACING DIMENSIONS "A" & "B" SEE SIGN LIGHTING ASSEMBLY DETAIL.

ELEVATION - TYPICAL CANTILEVER SIGN SUPPORT

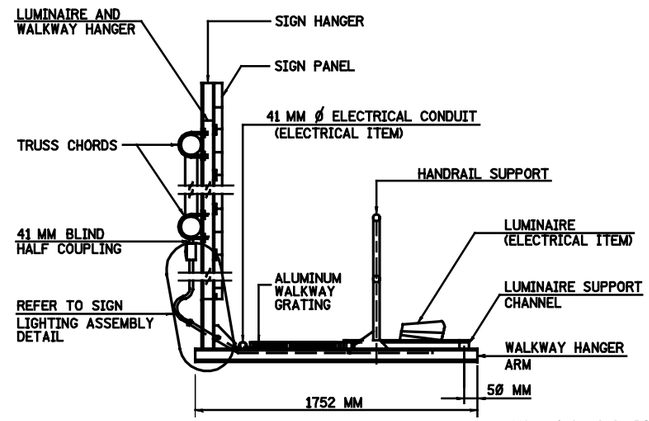

SECTION A-A

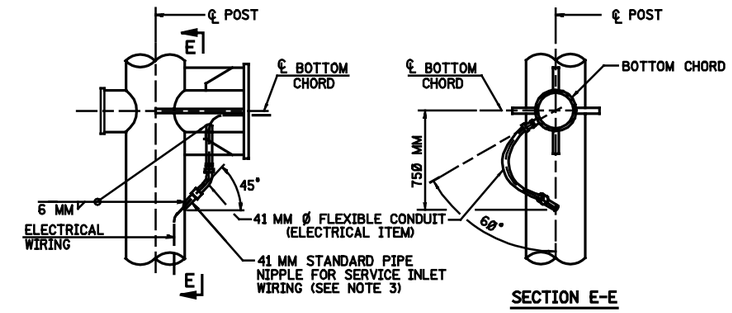

SECTION E-E

DETAILS OF WIRE OUTLETS

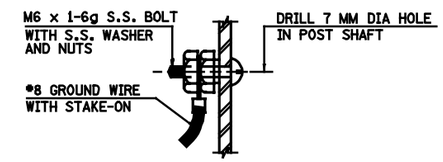

GROUND STUD

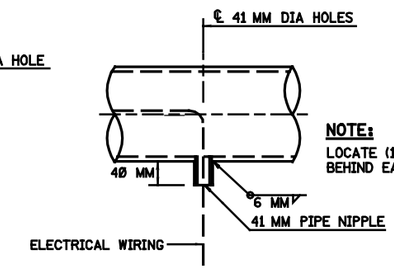

NOTE:
LOCATE (1) ONE WIRE OUTLET BEHIND EACH SIGN PANEL

DETAIL OF WIRE OUTLET ON TUBE

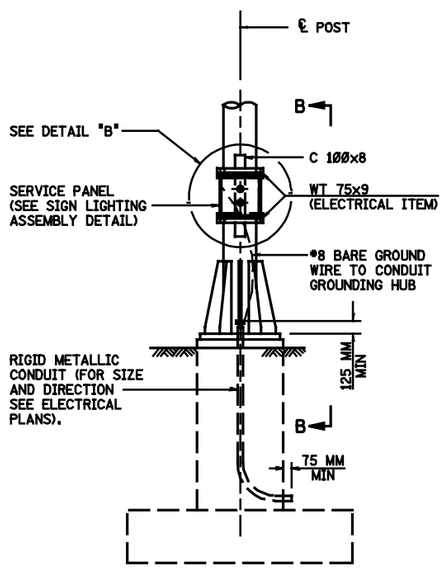

SIDE ELEVATION

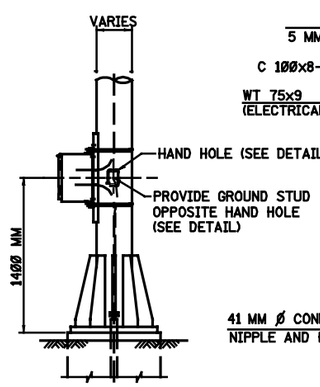

SECTION B-B

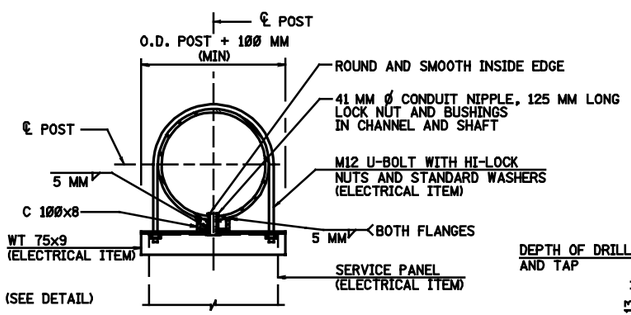

SECTION C-C

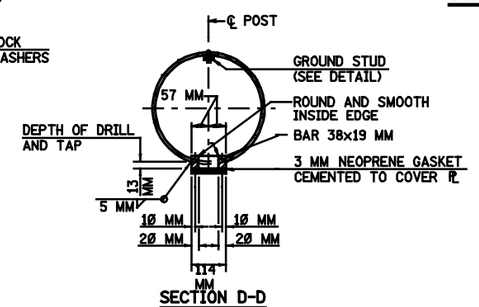

SECTION D-D

NOTES:

1. WHEN SIGN LIGHTING IS REQUIRED, AN APPROVED SIGN LIGHTING SYSTEM SHALL BE PROVIDED.
2. ALL BOLTS TO BE INSTALLED WITH WASHERS, LOCKWASHERS AND NUTS. ALL HARDWARE SHALL BE STAINLESS STEEL CONFORMING TO ASTM A320/A320M, GRADE B8, CLASS 1.
3. 41 MM STANDARD PIPE NIPPLES SHALL BE OF APPROVED MATERIAL AND BE COMPATIBLE WITH THE MATERIAL TO WHICH THEY ARE WELDED.
4. IF REQUIRED, WALKWAY GRATING AND LUMINAIRE SUPPORT CHANNELS SHALL BE CONTINUOUS FROM HANGER TO HANGER.
5. SEE ELECTRICAL PLANS FOR LOCATION AND DIRECTION OF SERVICE PANEL, RIGID CONDUITS, AND FLEXIBLE CONDUITS.

NOTE:
HAND HOLE AND GROUND STUD TO BE PROVIDED IN STEEL POST AT LOCATION OF RIGID METALLIC CONDUIT (SEE ELECTRICAL PLANS FOR LOCATION).

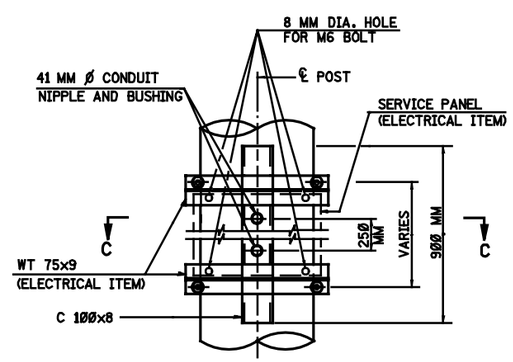

DETAIL "B"

TYPICAL SERVICE PANEL DETAIL AT SIGN STRUCTURE

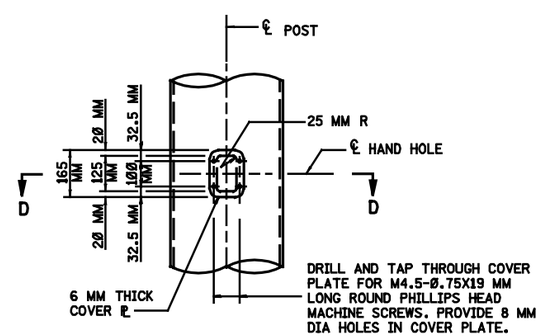

HAND HOLE AND COVER DETAIL

NOTE: ALL DIMENSIONS SHOWN ON THIS SHEET ARE IN METRIC UNITS.

SIGN STRUCTURE DRG. CA-D8

NEW JERSEY DEPARTMENT OF TRANSPORTATION
BUREAU OF STRUCTURAL ENGINEERING

CANTILEVER SIGN SUPPORT STRUCTURES
TYPICAL ELECTRICAL DETAILS

ROUTE: SECTION:

SCALE : NONE

BRIDGE SHEET NO. OF

BRC003.DG ORIGINAL SHEET