| MARK | TYPE | LENGTH FT. | LENGTH IN. | NO. OF UNITS | NO. OF BARS/ UNIT | TOTAL NO. OF BARS | CORR. PROT. | A FT. | A IN. | B FT. | B IN. | C FT. | C IN. | REMARKS D FT. | D IN. | E FT. | E IN. | F FT. | F IN. | G FT. | G IN. |
|---|---|---|---|---|---|---|---|---|---|---|---|---|---|---|---|---|---|---|---|---|---|
| **CONSTRUCTION STAGE 1B – WEST ABUTMENT** | | | | | | | | | | | | | | | | | | | | | |
| **FOOTING** | | | | | | | | | | | | | | | | | | | | | |
| 13F01 | B | 5′ | −9″ | 4 | 23 | 92 | | 4′ | −6″ | 7″ | | 8″ | | | | | | | | | |
| 16F01 | STR | 32′ | −3″ | 1 | 82 | 82 | | | | | | | | | | | | | | | |
| 16F02 | STR | 17′ | −0″ | 2 | 20 | 40 | | | | | | | | | | | | | | | |
| 16F03 | A | 9′ | −0″ | 1 | 149 | 149 | | 8′ | −5″ | 7″ | | 5″ | | | | | | | | | |
| 29F01 | STR | 19′ | −6″ | 2 | 125 | 250 | | | | | | | | | | | | | | | |
| 29F02 | STR | 19′ | −0″ | 2 | 35 | 70 | | | | | | | | | | | | | | | |
| 32F01 | A | 12′ | −10″ | 1 | 136 | 136 | | 11′ | −5″ | 1′ | −5″ | 1′ | −1½″ | | | | | | | | |
| **STEM** | | | | | | | | | | | | | | | | | | | | | |
| 13A01 | STR | 17′ | −3½″ | 1 | 29 | 29 | | | | | | | | | | | | | | | |
| 13A02 | STR | 27′ | −5½″ | 2 | 28 | 56 | | | | | | | | | | | | | | | |
| 13A03 | F | 14′ | −5″ | 1 | 28 | 28 | | 12′ | −4″ | 2′ | −1″ | 10′ | −6½″ | 6′ | −6″ | | | | | | |
| 13A04 | STR | 12′ | −0″ | 1 | 28 | 28 | | | | | | | | | | | | | | | |
| 13A05 | STR | 16′ | −3½″ | 1 | 13 | 13 | | | | | | | | | | | | | | | |
| 13A06 | F | 6′ | −10″ | 1 | 10 | 10 | | 4′ | −7″ | 2′ | −3″ | 4′ | −7″ | | | | | | | | |
| 13A07 | STR | 18′ | −7″ | 1 | 34 | 34 | | | | | | | | | | | | | | | |
| 13A08 | STR | 32′ | −8″ | 2 | 29 | 58 | | | | | | | | | | | | | | | |
| 16A01 | STR | 11′ | −3″ | 1 | 149 | 149 | | | | | | | | | | | | | | | |
| 16A02 | STR | 6′ | −7½″ | 1 | 29 | 29 | | | | | | | | | | | | | | | |
| 16A03 | C | 11′ | −1″ | 1 | 64 | 64 | | 4′ | −9″ | 1′ | −7″ | 4′ | −9″ | | | | | | | | |
| 16A04 | C | 13′ | −11½″ | 1 | 20 | 20 | E | 6′ | −2″ | 1′ | −7½″ | 6′ | −2″ | | | | | | | | |
| 16A05 | C | 4′ | −2½″ | 7 | 5 | 35 | E | 10″ | | 2′ | −6½″ | 10″ | | GRILLAGE | | | | | | | |
| 16A06 | C | 4′ | −8″ | 7 | 5 | 35 | E | 10″ | | 3′ | −0″ | 10″ | | GRILLAGE | | | | | | | |
| 16A07 | STR | 8′ | −0″ | 1 | 34 | 34 | | | | | | | | | | | | | | | |
| 16A08 | F | 5′ | −6″ | 6 | 7 | 42 | E | 3′ | −6″ | 2′ | −0″ | 3′ | −6″ | | | | | | | | |
| 16A09 | STR | 27′ | −6″ | 1 | 3 | 3 | E | | | | | | | | | | | | | | |
| 16A10 | STR | 32′ | −8½″ | 1 | 3 | 3 | E | | | | | | | | | | | | | | |
| 19A01 | STR | 12′ | −3½″ | 1 | 19 | 19 | | | | | | | | | | | | | | | |
| 22A01 | STR | 14′ | −10″ | 1 | 117 | 117 | | | | | | | | | | | | | | | |
| 29A01 | STR | 14′ | −0″ | 1 | 117 | 117 | | | | | | | | | | | | | | | |
| 29A02 | STR | 17′ | −0″ | 1 | 19 | 19 | | | | | | | | | | | | | | | |
| **BACKWALL** | | | | | | | | | | | | | | | | | | | | | |
| 13B01 | STR | 29′ | −6″ | 2 | 5 | 10 | E | | | | | | | | | | | | | | |
| 13B02 | F | 12′ | −8″ | 1 | 5 | 5 | E | 9′ | −8″ | 3′ | −0″ | 9′ | −8″ | | | | | | | | |
| 13B03 | STR | 9′ | −8″ | 1 | 5 | 5 | E | | | | | | | | | | | | | | |
| 13B04 | STR | 32′ | −8½″ | 2 | 5 | 10 | E | | | | | | | | | | | | | | |
| 13B05 | STR | 6′ | −0″ | 1 | 1 | 1 | E | | | | | | | | | | | | | | |
| 13B06 | STR | 3′ | −0″ | 1 | 3 | 3 | E | | | | | | | | | | | | | | |
| 16B01 | C | 6′ | −8″ | 1 | 63 | 63 | E | 2′ | −10″ | 1′ | −0″ | 2′ | −10″ | | | | | | | | |
| 19B01 | GG | 15′ | −2½″ | 1 | 20 | 20 | E | 7½″ | | 6′ | −11½″ | 6′ | −11½″ | 6′ | −11½″ | | | | | 6′ | −11½″ |
| **HEADER** | | | | | | | | | | | | | | | | | | | | | |
| 13H01 | STR | 28′ | −2½″ | 2 | 3 | 6 | E | | | | | | | | | | | | | | |
| 13H02 | F | 27′ | −9″ | 1 | 3 | 3 | E | 25′ | −0″ | 2′ | −9″ | 13′ | −2″ | 21′ | −3½″ | | | | | | |
| 13H03 | STR | 32′ | −8½″ | 1 | 3 | 3 | E | | | | | | | | | | | | | | |
| 13H04 | E | 8′ | −6″ | 1 | 3 | 3 | E | 1′ | −9½″ | 3′ | −1″ | 3′ | −7½″ | 3′ | −1″ | 1′ | −11″ | | | | |
| 13H05 | C | 6′ | −3½″ | 1 | 3 | 3 | E | 3′ | −1½″ | 2′ | −2½″ | 11½″ | | | | | | | | | |
| 13H06 | Q | 5′ | −4½″ | 2 | 3 | 6 | E | 2′ | −1″ | 1′ | −9″ | 1′ | −6″ | | | 1′ | −9″ | 1′ | −2½″ | 10½″ | |
| 13H07 | U | 7′ | −6½″ | 1 | 5 | 5 | E | 1′ | −0″ | 9″ | | 2′ | −0½″ | 1′ | −0″ | 3′ | −3″ | | | | |
| 13H08 | STR | 9′ | −8″ | 2 | 3 | 6 | E | | | | | | | | | | | | | | |
| 13H09 | F | 3′ | −11″ | 1 | 5 | 5 | E | 2′ | −1″ | 1′ | −10″ | 2′ | −1″ | | | | | | | | |
| **PARAPET** | | | | | | | | | | | | | | | | | | | | | |
| 13P01 | STR | 9′ | −8″ | 2 | 3 | 6 | E | | | | | | | | | | | | | | |
| 13P02 | Q | 5′ | −6½″ | 1 | 3 | 3 | E | 10″ | | 2′ | −4″ | 2′ | −4″ | 3″ | | 2′ | −4″ | 3″ | | 2′ | −4″ |
| 13P03 | STR | 0′ | −11½″ | 1 | 4 | 4 | E | | | | | | | | | | | | | | |
| 13P04 | Q | 5′ | −0″ | 1 | 5 | 5 | E | 4″ | | 2′ | −4″ | 2′ | −4″ | 3″ | | 2′ | −4″ | | | 2′ | −4″ |
| 13P05 | STR | 3′ | −1½″ | 2 | 4 | 8 | E | | | | | | | | | | | | | | |
| **EAST ABUTMENT** | | | | | | | | | | | | | | | | | | | | | |
| **FOOTING** | | | | | | | | | | | | | | | | | | | | | |
| 13F30 | B | 5′ | −9″ | 4 | 28 | 112 | | 4′ | −6″ | 7″ | | 8″ | | | | | | | | | |
| 16F30 | A | 9′ | −0″ | 1 | 214 | 214 | | 8′ | −5″ | 7″ | | 5″ | | | | | | | | | |
| 16F31 | STR | 35′ | −0″ | 1 | 123 | 123 | | | | | | | | | | | | | | | |
| 16F32 | STR | 11′ | −3″ | 2 | 17 | 34 | | | | | | | | | | | | | | | |
| 29F30 | STR | 19′ | −6″ | 2 | 198 | 396 | | | | | | | | | | | | | | | |
| 29F31 | STR | 16′ | −1″ TO 22′ −2½″ VAR. 3½″ | 2 | 22 | 44 | | | | | | | | | | | | | | | |
| 32F30 | A | 12′ | −10″ | 1 | 209 | 209 | | 11′ | −5″ | 1′ | −5″ | 1′ | −1½″ | | | | | | | | |
| **STEM** | | | | | | | | | | | | | | | | | | | | | |
| 13A30 | STR | 18′ | −4″ | 1 | 33 | 33 | | | | | | | | | | | | | | | |
| 13A31 | STR | 32′ | −3″ | 2 | 29 | 58 | | | | | | | | | | | | | | | |
| 13A32 | STR | 17′ | −7″ | 1 | 35 | 35 | | | | | | | | | | | | | | | |
| 13A33 | STR | 33′ | −9½″ | 2 | 28 | 56 | | | | | | | | | | | | | | | |
| 13A34 | STR | 29′ | −6½″ | 1 | 27 | 27 | | | | | | | | | | | | | | | |
| 13A35 | STR | 30′ | −8½″ | 1 | 28 | 28 | | | | | | | | | | | | | | | |
| 13A36 | F | 11′ | −9½″ | 1 | 27 | 27 | | 9′ | −9½″ | 2′ | −0″ | 4′ | −10½″ | 8′ | −6″ | | | | | | |
| 13A37 | STR | 10′ | −10½″ | 1 | 28 | 28 | | | | | | | | | | | | | | | |
| 13A38 | STR | 16′ | −7″ | 1 | 31 | 31 | | | | | | | | | | | | | | | |

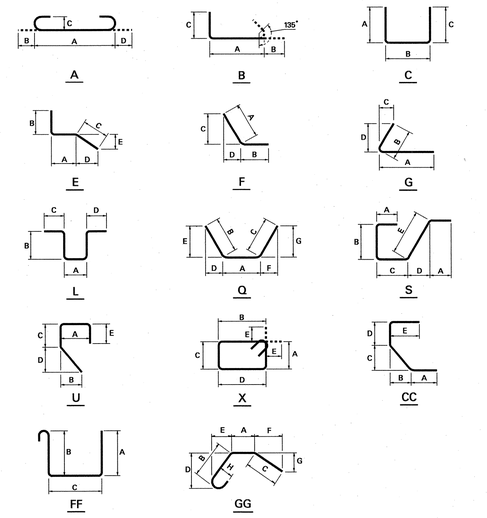


| STATE | FEDERAL PROJECT NO. | SHEET | TOTAL SHEETS |
|---|---|---|---|
| N.J. | FS-BR-0040 (168) | | |

STRUCTURE NO. 2004-164

ROUTE 22 OVER CONRAIL AND LIBERTY AVENUE (FORMERLY STR. NO. 2004-153)

## BAR TYPES

NEW JERSEY DEPARTMENT OF TRANSPORTATION
BUREAU OF STRUCTURAL ENGINEERING

# BAR SCHEDULE – 1

ROUTE 22 LIBERTY AVENUE & CONRAIL BRIDGE
CONTRACT NO. 057009080

HILLSIDE TOWNSHIP MUNICIPALITY — UNION COUNTY

PB AMERICAS, INC.
CERTIFICATION OF AUTHORIZATION NO. 24GA28029800

BRUCE J. KARALIUS
NEW JERSEY PROFESSIONAL ENGINEER LICENSE NO. 26369

SCALE: AS SHOWN

BRIDGE SHEET NO. B66 of B128

173

PARSONS BRINCKERHOFF CADD DATA

| | |
|---|---|
| OPERATOR | mcrluemo |
| PLOT DATE | 01-DEC-2009 14:26 |
| PENTABLE | ST-Full.tbl |
| DESIGN FILE | T:\NOJOB\Structure\Bridge_No\01_a.dgn |

| CONTROL SECTION | | JOB NO. | |
|---|---|---|---|
| DES. BY | J. BOGNAR | CHK. BY | M. CHEN<br>Y. CHEN |
| DWN. BY | J. BOGNAR | | |
| EST. BY | C. MANJUNATH | CHK. BY | M. CHEN |
| SPECS. BY | B. KARALIUS | | |
| IN CHARGE OF | B. KARALIUS | | |

## NOTES:

1. ALL REINFORCEMENT BENDS SHALL CONFORM TO THE LATEST ACI REQUIREMENTS.
2. ANY DAMAGE TO CORROSION PROTECTION OF REINFORCEMENT BARS SHALL BE REPAIRED AS PER SPECIFICATIONS.
3. BAR LOCATIONS MAY BE SHIFTED SLIGHTLY TO AVOID WEEP HOLES, BACKWALL PLATE, ANCHOR BOLTS, AND OTHER BARS. FIELD BENDS ARE NOT PERMITTED, UNLESS NOTED OTHERWISE.

## STRUCTURE UNIT:

A – ABUTMENT STEM
B – BACKWALL
C – PIER COLUMN, PIER CAP, CULVERT, HAMMERHEAD PIER, CRASH WALL, PIER WALL, CLOSURE POUR
D – DECK SLAB, DIAPHRAGMS
F – FOOTING
H – HEADER, HEADWALL
M – MEDIAN SLAB
P – PARAPET, BARRIER CURB, PYLON
R – APPROACH SLAB
S – SIDEWALK, CURB
T – TOE WALL
W – WINGWALL, RETAINING WALL

BAR SIZE
STRUCTURE UNIT
BAR NUMBER
16 B 22
EXAMPLE: 16B22 = A SIZE 16 BAR, NUMBER 22, PLACED IN THE BACKWALL OF THE ABUTMENT.

## CORROSION PROTECTION:

E – EPOXY COATED
G – GALVANIZED
S – SOLID STAINLESS STEEL

| REVISION | BY | CKD. | DATE |
|---|---|---|---|
| | | | |
| | | | |
| | | | |

| MARK | TYPE | LENGTH FT. | LENGTH IN. | NO. OF UNITS | NO. OF BARS/ UNIT | TOTAL NO. OF BARS | CORR. PROT. | A FT. | A IN. | B FT. | B IN. | C FT. | C IN. | REMARKS D FT. | D IN. | E FT. | E IN. | F FT. | F IN. | G FT. | G IN. |
|---|---|---|---|---|---|---|---|---|---|---|---|---|---|---|---|---|---|---|---|---|---|
| 13A39 | STR | 16′ | −2″ | 1 | 10 | 10 | | | | | | | | | | | | | | | |
| 13A40 | F | 6′ | −10″ | 1 | 9 | 9 | | 4′ | −7″ | 2′ | −3″ | 4′ | −7″ | | | | | | | | |
| 16A30 | STR | 11′ | −3″ | 1 | 214 | 214 | | | | | | | | | | | | | | | |
| 16A31 | STR | 7′ | −8″ | 1 | 33 | 33 | E | | | | | | | | | | | | | | |
| 16A32 | STR | 33′ | −9 1/2″ | 1 | 3 | 3 | E | | | | | | | | | | | | | | |
| 16A33 | C | 13′ | −7 1/2″ | 1 | 20 | 20 | E | 6′ | −0″ | 1′ | −7 1/2″ | 6′ | −0″ | | | | | | | | |
| 16A34 | C | 4′ | −2 1/2″ | 6 | 4 | 24 | E | 10″ | | 2′ | −6 1/2″ | 10″ | | GRILLAGE | | | | | | | |
| 16A35 | C | 4′ | −2″ | 6 | 4 | 24 | E | 10″ | | 2′ | −6″ | 10″ | | GRILLAGE | | | | | | | |
| 16A36 | F | 5′ | −6″ | 1 | 81 | 81 | E | 3′ | −6″ | 2′ | −0″ | 3′ | −6″ | | | | | | | | |
| 16A37 | C | 11′ | −1″ | 1 | 99 | 99 | E | 4′ | −9″ | 1′ | −7″ | 4′ | −9″ | | | | | | | | |
| 16A38 | STR | 32′ | −3″ | 1 | 3 | 3 | E | | | | | | | | | | | | | | |
| 16A39 | STR | 29′ | −6 1/2″ | 1 | 3 | 3 | E | | | | | | | | | | | | | | |
| 16A40 | STR | 7′ | −0 1/2″ | 1 | 35 | 35 | E | | | | | | | | | | | | | | |
| 16A41 | STR | 6′ | −0 1/2″ | 1 | 30 | 30 | E | | | | | | | | | | | | | | |
| 19A30 | STR | 12′ | −2″ | 1 | 17 | 17 | | | | | | | | | | | | | | | |
| 22A30 | STR | 14′ | −10″ | 1 | 192 | 192 | | | | | | | | | | | | | | | |
| 29A30 | STR | 14′ | −0″ | 1 | 192 | 192 | | | | | | | | | | | | | | | |
| 29A31 | STR | 16′ | −10″ | 1 | 17 | 17 | | | | | | | | | | | | | | | |
| **BACKWALL** | | | | | | | | | | | | | | | | | | | | | |
| 13B30 | STR | 32′ | −3 1/2″ | 2 | 5 | 10 | E | | | | | | | | | | | | | | |
| 13B31 | STR | 33′ | −9 1/2″ | 2 | 5 | 10 | E | | | | | | | | | | | | | | |
| 13B32 | STR | 29′ | −0″ | 2 | 5 | 10 | E | | | | | | | | | | | | | | |
| 13B33 | E | 7′ | −4 1/2″ | 1 | 5 | 5 | E | 3′ | −4 1/2″ | 2′ | −0″ | 2′ | −0″ | 1′ | −0″ | 1′ | −9″ | | | | |
| 13B34 | F | 6′ | −0 1/2″ | 1 | 5 | 5 | E | 4′ | −0 1/2″ | 2′ | −0″ | 3′ | −6″ | 2′ | −0″ | | | | | | |
| 13B35 | STR | 9′ | −8″ | 2 | 5 | 10 | E | | | | | | | | | | | | | | |
| 16B30 | C | 6′ | −8″ | 1 | 99 | 99 | E | 2′ | −10″ | 1′ | −0″ | 2′ | −10″ | | | | | | | | |
| 19B30 | GG | 15′ | −2 1/2″ | 1 | 20 | 20 | E | 7 1/2″ | | 6′ | −11 1/2″ | 6′ | −11 1/2″ | 6′ | −11 1/2″ | | | | | 6′ | −11 1/2″ |
| **HEADER** | | | | | | | | | | | | | | | | | | | | | |
| 13H30 | Q | 11′ | −0″ | 1 | 3 | 3 | E | 1′ | −11″ | 8′ | −2 1/2″ | 10 1/2″ | | | | 8′ | −2 1/2″ | 9″ | | 5 1/2″ | |
| 13H31 | STR | 5′ | −1 1/2″ | 1 | 3 | 3 | E | | | | | | | | | | | | | | |
| 13H32 | F | 11′ | −10 1/2″ | 1 | 3 | 3 | E | 8′ | −2 1/2″ | 3′ | −8″ | 8′ | −2 1/2″ | | | | | | | | |
| 13H33 | F | 4′ | −0″ | 1 | 3 | 3 | E | 2′ | −0″ | 2′ | −0″ | 1′ | −9″ | 1′ | −0″ | | | | | | |
| 13H34 | STR | 24′ | −7″ | 2 | 3 | 6 | E | | | | | | | | | | | | | | |
| 13H35 | U | 7′ | −6 1/2″ | 1 | 18 | 18 | E | 1′ | −0″ | 9″ | | 2′ | −0 1/2″ | 1′ | −0″ | 3′ | −3″ | | | | |
| 13H36 | Q | 5′ | −4 1/2″ | 2 | 5 | 10 | E | 2′ | −1″ | 1′ | −9″ | 1′ | −6″ | | | 1′ | −9″ | 1′ | −2 1/2″ | 10 1/2″ | |
| 13H37 | STR | 33′ | −9 1/2″ | 2 | 3 | 6 | E | | | | | | | | | | | | | | |
| 13H38 | STR | 28′ | −8″ | 2 | 3 | 6 | E | | | | | | | | | | | | | | |
| 13H39 | F | 4′ | −5″ | 1 | 3 | 3 | E | 2′ | −5″ | 2′ | −0″ | 2′ | −1 1/2″ | 1′ | −2 1/2″ | | | | | | |
| 13H40 | F | 4′ | −11″ | 1 | 3 | 3 | E | 2′ | −11″ | 2′ | −0″ | 2′ | −7″ | 1′ | −5 1/2″ | | | | | | |
| 13H41 | STR | 3′ | −9″ | 1 | 3 | 3 | E | | | | | | | | | | | | | | |
| 13H42 | STR | 9′ | −8″ | 2 | 3 | 6 | E | | | | | | | | | | | | | | |

| MARK | TYPE | LENGTH FT. | LENGTH IN. | NO. OF UNITS | NO. OF BARS/ UNIT | TOTAL NO. OF BARS | CORR. PROT. | A FT. | A IN. | B FT. | B IN. | C FT. | C IN. | REMARKS D FT. | D IN. | E FT. | E IN. | F FT. | F IN. | G FT. | G IN. |
|---|---|---|---|---|---|---|---|---|---|---|---|---|---|---|---|---|---|---|---|---|---|
| 16H30 | C | 5′ | −7″ TO 5′ −2″ VAR. 5″ | 2 | 2 | 4 | E | 1′ | −6″ | 2′ | −7″ TO 2′ −2″ VAR. 5″ | 1′ | −6″ | | | | | | | | |
| **PARAPET** | | | | | | | | | | | | | | | | | | | | | |
| 13P30 | Q | 5′ | −0″ | 1 | 18 | 18 | E | 4″ | | 2′ | −4″ | 2′ | −4″ | 3″ | | 2′ | −4″ | | | 2′ | −4″ |
| 13P31 | Q | 5′ | −6 1/2″ | 1 | 5 | 5 | E | 10″ | | 2′ | −4″ | 2′ | −4″ | 3″ | | 2′ | −4″ | 3″ | | 2′ | −4″ |
| 13P32 | STR | 8′ | −3″ | 2 | 4 | 8 | E | | | | | | | | | | | | | | |
| 13P33 | STR | 1′ | −8″ | 1 | 4 | 4 | E | | | | | | | | | | | | | | |
| 13P34 | STR | 9′ | −8″ | 2 | 3 | 6 | E | | | | | | | | | | | | | | |
| **WEST PIER** | | | | | | | | | | | | | | | | | | | | | |
| **FOOTING** | | | | | | | | | | | | | | | | | | | | | |
| 13F70 | B | 6′ | −0″ | 6 | 10 | 60 | | 4′ | −9″ | 7″ | | 8″ | | SEISMIC HOOK | | | | | | | |
| 16F70 | B | 4′ | −7 1/2″ | 5 | 19 | 95 | | 3′ | −8″ | 5 1/2″ | | 6″ | | CROSS TIE | | | | | | | |
| 19F70 | STR | 21′ | −6″ | 1 | 34 | 34 | | | | | | | | | | | | | | | |
| 19F71 | STR | 33′ | −6″ | 1 | 22 | 22 | | | | | | | | | | | | | | | |
| 19F72 | STR | 15′ | −8″ | 2 | 5 | 10 | | | | | | | | | | | | | | | |
| 19F73 | C | 9′ | −8″ | 2 | 5 | 10 | | 3′ | −0″ | 3′ | −8″ | 3′ | −0″ | | | | | | | | |
| 32F70 | STR | 33′ | −6″ | 1 | 37 | 37 | | | | | | | | | | | | | | | |
| 32F71 | STR | 21′ | −6″ | 1 | 58 | 58 | | | | | | | | | | | | | | | |
| 36F70 | G | 20′ | −11″ | 2 | 5 | 10 | | 18′ | −11″ | 2′ | −0″ | 3″ | | 2′ | −1″ | | | | | | |
| 36F71 | F | 20′ | −10 1/2″ | 2 | 37 | 74 | | 18′ | −10 1/2″ | 2′ | −0″ | 18′ | −10 1/2″ | | | | | | | | |
| **COLUMN** | | | | | | | | | | | | | | | | | | | | | |
| 16C70 | B | 4′ | −7 1/2″ | 1 | 527 | 527 | | 3′ | −8″ | 5 1/2″ | | 6″ | | CROSS TIE | | | | | | | |
| 19C70 | STR | 15′ | −8 1/2″ TO 16′ −8 1/2″ VAR. 1 1/2″ | 2 | 9 | 18 | | | | | | | | | | | | | | | |
| 19C71 | C | 9′ | −8″ | 2 | 25 | 50 | | 3′ | −0″ | 3′ | −8″ | 3′ | −0″ | | | | | | | | |
| 36C70 | A | 21′ | −0″ | 1 | 10 | 10 | | 19′ | −5″ | 1′ | −7″ | 1′ | −3″ | | | | | | | | |
| 36C71 | A | 9′ | −3″ TO 25′ −9″ VAR. 3′ −3 1/2″ | 4 | 6 | 24 | | 7′ | −8″ TO 24′ −2″ VAR. 3′ −3 1/2″ | 1′ | −7″ | 1′ | −3″ | | | | | | | | |
| 36C72 | A | 20′ | −10 1/2″ | 1 | 74 | 74 | | 19′ | −3 1/2″ | 1′ | −7″ | 1′ | −3″ | | | | | | | | |
| **CAP** | | | | | | | | | | | | | | | | | | | | | |
| 16C73 | B | 4′ | −7 1/2″ | 1 | 125 | 125 | | 3′ | −8″ | 5 1/2″ | | 6″ | | CROSS TIE | | | | | | | |
| 16C74 | X | 19′ | −1″ | 2 | 16 | 32 | | 2′ | −11″ | 6′ | −2″ | 2′ | −11″ | 6′ | −2″ | 5 1/2″ | | | | | |

A

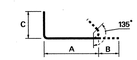

B

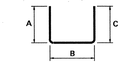

C



E

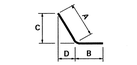

F

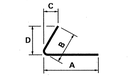

G



L

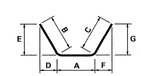

Q

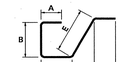

S



U

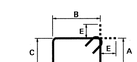

X

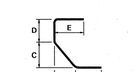

CC



FF

GG



| STATE | FEDERAL PROJECT NO. | SHEET | TOTAL SHEETS |
|---|---|---|---|
| N.J. | FS-BR-0040 (168) | | |

STRUCTURE NO. 2004-164

ROUTE 22 OVER CONRAIL AND LIBERTY AVENUE (FORMERLY STR. NO. 2004-153)

## BAR TYPES

NEW JERSEY DEPARTMENT OF TRANSPORTATION
BUREAU OF STRUCTURAL ENGINEERING

# BAR SCHEDULE – 2

ROUTE 22 LIBERTY AVENUE & CONRAIL BRIDGE
CONTRACT NO. 057009080

HILLSIDE TOWNSHIP MUNICIPALITY — UNION COUNTY

PB AMERICAS, INC.
CERTIFICATION OF AUTHORIZATION NO. 24GA28029800

BRUCE J. KARALIUS
NEW JERSEY PROFESSIONAL ENGINEER LICENSE NO. 26369

SCALE: AS SHOWN

BRIDGE SHEET NO. B67 of B128

174

| REVISION | BY | CKD. | DATE |
|---|---|---|---|
| | | | |
| | | | |
| | | | |
| | | | |

PARSONS BRINCKERHOFF CADD DATA

| | |
|---|---|
| OPERATOR | marruema |
| PLOT DATE | 04-DEC-2009 14:26 |
| PENTABLE | stf4ul4.tbl |
| DESIGN FILE | s:\0040\struc\Bridge\bs01b.dgn |

| CONTROL SECTION | | JOB NO. | |
|---|---|---|---|
| DES. BY | J. BOGNAR | CHK. BY | M. CHEN<br>Y. CHEN |
| DWN. BY | J. BOGNAR | | |
| EST. BY | C. MANJUNATH | CHK. BY | M. CHEN |
| SPECS. BY | B. KARALIUS | | |

IN CHARGE OF B. KARALIUS

## NOTES:

1. ALL REINFORCEMENT BENDS SHALL CONFORM TO THE LATEST ACI REQUIREMENTS.
2. ANY DAMAGE TO CORROSION PROTECTION OF REINFORCEMENT BARS SHALL BE REPAIRED AS PER SPECIFICATIONS.
3. BAR LOCATIONS MAY BE SHIFTED SLIGHTLY TO AVOID WEEP HOLES, BACKWALL PLATE, ANCHOR BOLTS, AND OTHER BARS. FIELD BENDS ARE NOT PERMITTED, UNLESS NOTED OTHERWISE.

## STRUCTURE UNIT:

A – ABUTMENT STEM
B – BACKWALL
C – PIER COLUMN, PIER CAP, CULVERT, HAMMERHEAD PIER, CRASH WALL, PIER WALL, CLOSURE POUR
D – DECK SLAB, DIAPHRAGMS
F – FOOTING
H – HEADER, HEADWALL
M – MEDIAN SLAB
P – PARAPET, BARRIER CURB, PYLON
R – APPROACH SLAB
S – SIDEWALK, CURB
T – TOE WALL
W – WINGWALL, RETAINING WALL

BAR SIZE
STRUCTURE UNIT
BAR NUMBER
16 B 22
EXAMPLE: 16B22 = A SIZE 16 BAR, NUMBER 22, PLACED IN THE BACKWALL OF THE ABUTMENT.

## CORROSION PROTECTION:

E – EPOXY COATED
G – GALVANIZED
S – SOLID STAINLESS STEEL

| MARK | TYPE | LENGTH FT. | LENGTH IN. | NO. OF UNITS | NO. OF BARS/ UNIT | TOTAL NO. OF BARS | CORR. PROT. | A FT. | A IN. | B FT. | B IN. | C FT. | C IN. | REMARKS D FT. | D IN. | E FT. | E IN. | F FT. | F IN. | G FT. | G IN. |
|---|---|---|---|---|---|---|---|---|---|---|---|---|---|---|---|---|---|---|---|---|---|
| 16C75 | X | 14′-3″ TO 16′-11″ VAR. 4″ | | 4 | 9 | 36 | | 2′-11″ | | 3′-9″ TO 5′-1″ VAR. 2″ | | 2′-11″ | | 3′-9″ TO 5′-1″ VAR. 2″ | | 5½″ | | | | | |
| 16C76 | C | 8′-0″ | | 2 | 5 | 10 | | 2′-0″ | | 4′-0″ | | 2′-0″ | | | | | | | | | |
| 16C77 | X | 16′-4″ | | 1 | 11 | 11 | E | 3′-8″ | | 4′-0½″ | | 3′-8″ | | 4′-0½″ | | 5½″ | | GRILLAGE BAR | | | |
| 16C78 | C | 8′-5″ | | 3 | 11 | 33 | E | 2′-3″ | | 3′-11″ | | 2′-3″ | | GRILLAGE BAR | | | | | | | |
| 16C79 | C | 10′-0″ | | 3 | 11 | 33 | E | 3′-0½″ | | 3′-11″ | | 3′-0½″ | | GRILLAGE BAR | | | | | | | |
| 16C80 | C | 8′-0½″ | | 3 | 9 | 27 | E | 2′-3″ | | 3′-6½″ | | 2′-3″ | | GRILLAGE BAR | | | | | | | |
| 16C81 | C | 9′-7½″ | | 3 | 9 | 27 | E | 3′-0½″ | | 3′-6½″ | | 3′-0½″ | | GRILLAGE BAR | | | | | | | |
| 19C73 | STR | 20′-11½″ TO 21′-5½″ VAR. 1½″ | | 2 | 5 | 10 | | | | | | | | | | | | | | | |
| 19C74 | C | 9′-8″ | | 2 | 5 | 10 | | 3′-0″ | | 3′-8″ | | 3′-0″ | | | | | | | | | |
| 19C75 | Q | 20′-6½″ | | 2 | 7 | 14 | | 12′-0″ | | 5′-0″ | | 3′-6½″ | | 4′-11″ | | 1′-0½″ | | 8½″ | | 3′-6″ | |
| 19C76 | STR | 23′-11½″ | | 1 | 7 | 7 | | | | | | | | | | | | | | | |
| 19C77 | X | 17′-5″ TO 19′-3″ VAR. 2″ | | 4 | 12 | 48 | | 2′-11″ | | 5′-2″ TO 6′-1″ VAR. 1″ | | 2′-11″ | | 5′-2″ TO 6′-1″ VAR. 1″ | | 7½″ | | | | | |
| 19C78 | X | 18′-6″ | | 4 | 8 | 32 | | 2′-11″ | | 5′-8½″ | | 2′-11″ | | 5′-8½″ | | 7½″ | | | | | |
| 22C73 | STR | 45′-8″ | | 2 | 5 | 10 | | | | | | | | | | | | | | | |
| 22C74 | STR | 29′-5″ TO 43′-7″ VAR. 7′-1″ | | 2 | 3 | 6 | | | | | | | | | | | | | | | |
| 36C73 | C | 49′-6″ | | 1 | 10 | 10 | | 2′-0″ | | 45′-6″ | | 2′-0″ | | | | | | | | | |
| 36C74 | STR | 45′-0″ | | 1 | 10 | 10 | | | | | | | | | | | | | | | |
| **EAST PIER** | | | | | | | | | | | | | | | | | | | | | |
| **FOOTING** | | | | | | | | | | | | | | | | | | | | | |
| 13F85 | B | 5′-3″ | | 6 | 10 | 60 | | 4′-0″ | | 7″ | | 8″ | | SEISMIC HOOK | | | | | | | |
| 16F85 | B | 4′-7½″ | | 5 | 23 | 115 | | 3′-8″ | | 5½″ | | 6″ | | CROSS TIE | | | | | | | |
| 16F86 | STR | 12′-6″ | | 1 | 4 | 4 | | | | | | | | NOTCH BARS | | | | | | | |
| 16F87 | STR | 4′-0″ | | 1 | 13 | 13 | | | | | | | | NOTCH BARS | | | | | | | |
| 19F85 | STR | 19′-6″ | | 1 | 38 | 38 | | | | | | | | | | | | | | | |
| 19F86 | STR | 37′-6″ | | 1 | 20 | 20 | | | | | | | | | | | | | | | |
| 19F87 | STR | 23′-8″ | | 2 | 5 | 10 | | | | | | | | | | | | | | | |
| 19F88 | C | 9′-8″ | | 2 | 5 | 10 | | 3′-0″ | | 3′-8″ | | 3′-0″ | | | | | | | | | |
| 25F85 | STR | 19′-6″ | | 1 | 69 | 69 | | | | | | | | | | | | | | | |
| 29F85 | STR | 37′-6″ | | 1 | 39 | 39 | | | | | | | | | | | | | | | |
| 32F85 | F | 18′-9″ | | 2 | 23 | 46 | | 16′-11″ | | 1′-10″ | | 16′-11″ | | | | | | | | | |
| 32F86 | G | 18′-9″ | | 2 | 5 | 10 | | 16′-11″ | | 1′-10″ | | 2½″ | | 1′-10½″ | | | | | | | |

| MARK | TYPE | LENGTH FT. | LENGTH IN. | NO. OF UNITS | NO. OF BARS/ UNIT | TOTAL NO. OF BARS | CORR. PROT. | A FT. | A IN. | B FT. | B IN. | C FT. | C IN. | REMARKS D FT. | D IN. | E FT. | E IN. | F FT. | F IN. | G FT. | G IN. |
|---|---|---|---|---|---|---|---|---|---|---|---|---|---|---|---|---|---|---|---|---|---|
| **COLUMN** | | | | | | | | | | | | | | | | | | | | | |
| 16C85 | B | 4′-7½″ | | 1 | 551 | 551 | | 3′-8″ | | 5½″ | | 6″ | | CROSS TIE | | | | | | | |
| 19C85 | STR | 23′-8½″ TO 24′-8½″ VAR. 1½″ | | 2 | 9 | 18 | | | | | | | | | | | | | | | |
| 19C86 | C | 9′-8″ | | 2 | 23 | 46 | | 3′-0″ | | 3′-8″ | | 3′-0″ | | | | | | | | | |
| 19C87 | STR | 24′-11½″ TO 28′-2½″ VAR. 3″ | | 2 | 14 | 28 | | | | | | | | | | | | | | | |
| 32C85 | A | 19′-3″ | | 2 | 23 | 46 | | 17′-10″ | | 1′-5″ | | 1′-1½″ | | | | | | | | | |
| 32C86 | A | 15′-1″ TO 23′-5″ VAR. 8′-4″ | | 4 | 2 | 8 | | 13′-8″ TO 22′-0″ VAR. 8′-4″ | | 1′-5″ | | 1′-1½″ | | | | | | | | | |
| 32C87 | A | 19′-4½″ | | 1 | 10 | 10 | | 17′-11½″ | | 1′-5″ | | 1′-1½″ | | | | | | | | | |
| **CAP** | | | | | | | | | | | | | | | | | | | | | |
| 16C88 | B | 4′-7½″ | | 1 | 135 | 135 | | 3′-8″ | | 5½″ | | 6″ | | CROSS TIE | | | | | | | |
| 16C89 | X | 23′-4″ | | 1 | 80 | 80 | | 2′-11″ | | 8′-3½″ | | 2′-11″ | | 8′-3½″ | | 5½″ | | | | | |
| 16C90 | X | 16′-3″ TO 19′-7″ VAR. 4″ | | 4 | 11 | 44 | | 2′-11″ | | 4′-9″ TO 6′-5″ VAR. 2″ | | 2′-11″ | | 4′-9″ TO 6′-5″ VAR. 2″ | | 5½″ | | | | | |
| 16C91 | X | 19′-9″ TO 23′-1″ VAR. 2″ | | 4 | 21 | 84 | | 2′-11″ | | 6′-6″ TO 8′-2″ VAR. 1″ | | 2′-11″ | | 6′-6″ TO 8′-2″ VAR. 1″ | | 5½″ | | | | | |
| 16C92 | C | 8′-0″ | | 2 | 6 | 12 | | 2′-0″ | | 4′-0″ | | 2′-0″ | | | | | | | | | |
| 16C93 | C | 8′-2″ | | 3 | 9 | 27 | E | 2′-1½″ | | 3′-11″ | | 2′-1½″ | | GRILLAGE BAR | | | | | | | |
| 16C94 | C | 7′-6″ | | 3 | 9 | 27 | E | 1′-9½″ | | 3′-11″ | | 1′-9½″ | | GRILLAGE BAR | | | | | | | |
| 16C95 | C | 7′-9½″ | | 3 | 9 | 27 | E | 2′-1½″ | | 3′-6½″ | | 2′-1½″ | | GRILLAGE BAR | | | | | | | |
| 16C96 | C | 7′-1½″ | | 3 | 9 | 27 | E | 1′-9½″ | | 3′-6½″ | | 1′-9½″ | | GRILLAGE BAR | | | | | | | |
| 16C97 | X | 16′-4″ | | 1 | 16 | 16 | E | 3′-8″ | | 4′-0½″ | | 3′-8″ | | 4′-0½″ | | 5½″ | | GRILLAGE BAR | | | |
| 19C88 | STR | 28′-6″ TO 29′-0″ VAR. 1½″ | | 2 | 5 | 10 | | | | | | | | | | | | | | | |
| 19C89 | C | 9′-8″ | | 2 | 5 | 10 | | 3′-0″ | | 3′-8″ | | 3′-0″ | | | | | | | | | |
| 19C90 | Q | 27′-0½″ | | 2 | 7 | 14 | | 17′-5″ | | 5′-0″ | | 4′-7½″ | | 4′-11″ | | 1′-0½″ | | 11″ | | 4′-6½″ | |
| 19C91 | STR | 31′-6″ | | 1 | 7 | 7 | | | | | | | | | | | | | | | |
| 22C88 | STR | 34′-0″ | | 4 | 7 | 28 | | | | | | | | | | | | | | | |
| 22C89 | STR | 20′-2″ TO 32′-5″ VAR. 4′-1″ | | 4 | 4 | 16 | | | | | | | | | | | | | | | |
| 36C88 | F | 37′-11″ | | 2 | 10 | 20 | | 35′-11″ | | 2′-0″ | | 35′-11″ | | | | | | | | | |
| 36C89 | STR | 35′-8″ | | 2 | 10 | 20 | | | | | | | | | | | | | | | |

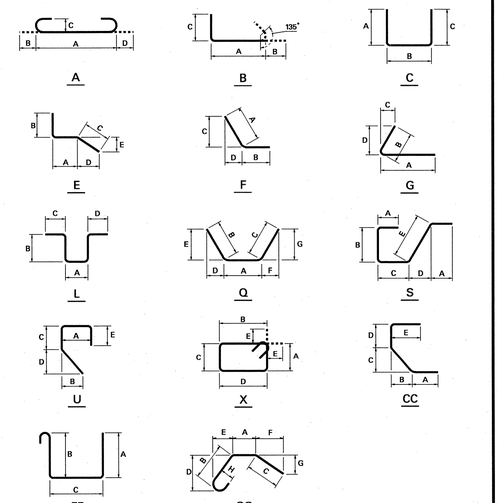


## BAR TYPES

| STATE | FEDERAL PROJECT NO. | SHEET | TOTAL SHEETS |
|---|---|---|---|
| N.J. | FS-BR-0040 (168) | | |

STRUCTURE NO. 2004-164

ROUTE 22 OVER CONRAIL AND LIBERTY AVENUE (FORMERLY STR. NO. 2004-153)

NEW JERSEY DEPARTMENT OF TRANSPORTATION
BUREAU OF STRUCTURAL ENGINEERING

# BAR SCHEDULE – 3

ROUTE 22 LIBERTY AVENUE & CONRAIL BRIDGE
CONTRACT NO. 057009080

HILLSIDE TOWNSHIP — MUNICIPALITY
UNION — COUNTY

PB AMERICAS, INC.
CERTIFICATION OF AUTHORIZATION NO. 24GA28029800

BRUCE J. KARALIUS
NEW JERSEY PROFESSIONAL ENGINEER LICENSE NO. 26369

SCALE: AS SHOWN

BRIDGE SHEET NO. B68 of B128

175

| REVISION | BY | CKD. | DATE |
|---|---|---|---|
| | | | |
| | | | |
| | | | |
| | | | |

## NOTES:

1. ALL REINFORCEMENT BENDS SHALL CONFORM TO THE LATEST ACI REQUIREMENTS.
2. ANY DAMAGE TO CORROSION PROTECTION OF REINFORCEMENT BARS SHALL BE REPAIRED AS PER SPECIFICATIONS.
3. BAR LOCATIONS MAY BE SHIFTED SLIGHTLY TO AVOID WEEP HOLES, BACKWALL PLATE, ANCHOR BOLTS, AND OTHER BARS. FIELD BENDS ARE NOT PERMITTED, UNLESS NOTED OTHERWISE.

## STRUCTURE UNIT:

- A – ABUTMENT STEM
- B – BACKWALL
- C – PIER COLUMN, PIER CAP, CULVERT, HAMMERHEAD PIER, CRASH WALL, PIER WALL, CLOSURE POUR
- D – DECK SLAB, DIAPHRAGMS
- F – FOOTING
- H – HEADER, HEADWALL
- M – MEDIAN SLAB
- P – PARAPET, BARRIER CURB, PYLON
- R – APPROACH SLAB
- S – SIDEWALK, CURB
- T – TOE WALL
- W – WINGWALL, RETAINING WALL

BAR SIZE / STRUCTURE UNIT / BAR NUMBER

16 B 22

EXAMPLE: 16B22 = A SIZE 16 BAR, NUMBER 22, PLACED IN THE BACKWALL OF THE ABUTMENT.

## CORROSION PROTECTION:

- E – EPOXY COATED
- G – GALVANIZED
- S – SOLID STAINLESS STEEL

| CONTROL SECTION | | JOB NO. | |
|---|---|---|---|
| DES. BY | J. BOGNAR | CHK. BY | M. CHEN<br>Y. CHEN |
| DWN. BY | J. BOGNAR | | |
| EST. BY | C. MANJUNATH | CHK. BY | M. CHEN |
| SPECS. BY | B. KARALIUS | | |
| IN CHARGE OF | B. KARALIUS | | |

PARSONS BRINCKERHOFF CADD DATA
OPERATOR mcruemo
PLOT DATE 01-DEC-2009 14:26
PENTABLE str-fuh.tbl
DESIGN FILE T:\NJDOT\04\Structure\Bridge_Nbs01_c.dgn

| MARK | TYPE | LENGTH FT. | LENGTH IN. | NO. OF UNITS | NO. OF BARS/ UNIT | TOTAL NO. OF BARS | CORR. PROT. | A FT. | A IN. | B FT. | B IN. | C FT. | C IN. | REMARKS D FT. | D IN. | E FT. | E IN. | F FT. | F IN. | G FT. | G IN. |
|---|---|---|---|---|---|---|---|---|---|---|---|---|---|---|---|---|---|---|---|---|---|
| **DECK** | | | | | | | | | | | | | | | | | | | | | |
| **SLAB** | | | | | | | | | | | | | | | | | | | | | |
| 13D01 | U | 6′-2″ | | 19 | 15 | 285 | E | 11″ | | 9″ | | 1′-2″ | | 1′-0″ | | 2′-10″ | | | | | |
| 16D01 | STR | 20′-11″ | | 1 | 548 | 548 | E | | | | | | | | | | | | | | |
| 16D02 | STR | 29′-3″ | | 1 | 641 | 641 | E | | | | | | | | | | | | | | |
| 16D03 | STR | 1′-4 1/2″ TO 28′-3 1/2″ VAR. 9 1/2″ | | 1 | 35 | 35 | E | | | | | | | | | | | | | | |
| 16D04 | STR | 3′-4 1/2″ TO 18′-5″ VAR. 9 1/2″ | | 1 | 20 | 20 | E | | | | | | | | | | | | | | |
| 16D05 | STR | 2′-4 1/2″ TO 19′-3 1/2″ VAR. 3 1/2″ | | 1 | 59 | 59 | E | | | | | | | | | | | | | | |
| 16D06 | STR | 3′-0″ TO 29′-3″ VAR. 3 1/2″ | | 1 | 91 | 91 | E | | | | | | | | | | | | | | |
| 16D07 | A | 26′-0″ | | 1 | 374 | 374 | E | 25′-5″ | | 7″ | | 5″ | | | | | | | | | |
| 16D08 | A | 25′-4″ | | 1 | 274 | 274 | E | 24′-9″ | | 7″ | | 5″ | | | | | | | | | |
| 16D09 | A | 17′-7″ | | 1 | 274 | 274 | E | 17′-0″ | | 7″ | | 5″ | | | | | | | | | |
| 16D10 | A | 33′-9″ | | 1 | 274 | 274 | E | 33′-2″ | | 7″ | | 5″ | | | | | | | | | |
| 16D11 | A | 2′-1″ TO 25′-0 1/2″ VAR. 9 1/2″ | | 1 | 30 | 30 | E | 1′-6″ TO 24′-5 1/2″ VAR. 9 1/2″ | | 7″ | | 5″ | | | | | | | | | |
| 16D12 | STR | 3′-4″ TO 22′-4″ VAR. 9 1/2″ | | 1 | 25 | 25 | E | | | | | | | | | | | | | | |
| 16D13 | A | 3′-6 1/2″ TO 25′-8 1/2″ VAR. 3 1/2″ | | 1 | 77 | 77 | E | 2′-11 1/2″ TO 25′-1 1/2″ VAR. 3 1/2″ | | 7″ | | 5″ | | | | | | | | | |
| 16D14 | STR | 1′-11 1/2″ TO 22′-11 1/2″ VAR. 3 1/2″ | | 1 | 73 | 73 | E | | | | | | | | | | | | | | |
| 16D15 | A | 5′-10″ | | 1 | 753 | 753 | E | 5′-3″ | | 7″ | | 5″ | | | | | | | | | |
| 16D16 | A | 5′-2″ | | 1 | 547 | 547 | E | 4′-7″ | | 7″ | | 5″ | | | | | | | | | |
| 16D17 | STR | 40′-0″ | | 1 | 1514 | 1514 | E | | | | | | | | | | | | | | |
| 16D18 | STR | 11′-6″ TO 41′-6″ VAR. 5″ | | 1 | 73 | 73 | E | | | | | | | | | | | | | | |
| 16D19 | STR | 3′-0″ TO 40′-4″ VAR. 1′-2″ | | 1 | 33 | 33 | E | | | | | | | | | | | | | | |
| 16D20 | STR | 4′-6″ TO 46′-6″ VAR. 1′-2″ | | 1 | 37 | 37 | E | | | | | | | | | | | | | | |
| 16D21 | STR | 9′-1″ | | 1 | 6 | 6 | E | | | | | | | | | | | | | | |
| 16D22 | STR | 37′-2″ | | 1 | 6 | 6 | E | | | | | | | | | | | | | | |
| 16D23 | STR | 18′-2″ TO 33′-2″ VAR. 1′-6″ | | 1 | 11 | 11 | E | | | | | | | | | | | | | | |
| 16D24 | STR | 36′-0″ TO 51′-0″ VAR. 1′-6″ | | 1 | 11 | 11 | E | | | | | | | | | | | | | | |
| 16D25 | STR | 15′-10″ TO 30′-10″ VAR. 1′-6″ | | 1 | 11 | 11 | E | | | | | | | | | | | | | | |
| 16D26 | STR | 33′-7″ TO 48′-7″ VAR. 1′-6″ | | 1 | 11 | 11 | E | | | | | | | | | | | | | | |
| 16D27 | STR | 13′-7″ TO 28′-7″ VAR. 1′-6″ | | 1 | 11 | 11 | E | | | | | | | | | | | | | | |
| 16D28 | STR | 15′-0″ | | 2 | 7 | 14 | E | | | | | | | | | | | | | | |
| 16D29 | CC | 7′-6 1/2″ | | 10 | 11 | 110 | E | 6″ | | 7 1/2″ | | 2′-10 1/2″ | | 1′-1″ | | 3′-0″ | | | | | |
| 16D30 | F | 3′-2 1/2″ | | 10 | 11 | 110 | E | 1′-7 1/2″ | | 1′-7″ | | 1′-2 1/2″ | | 1′-2″ | | | | | | | |
| 16D31 | STR | 9′-5″ | | 5 | 3 | 15 | E | | | | | | | | | | | | | | |
| 16D32 | STR | 16′-3 1/2″ | | 5 | 3 | 15 | E | | | | | | | | | | | | | | |
| 16D33 | STR | 34′-0″ | | 1 | 28 | 28 | E | | | | | | | | | | | | | | |
| 16D34 | L | 3′-10″ | | 1 | 65 | 65 | E | 1′-0″ | | 7″ | | 10″ | | 10″ | | | | | | | |
| 16D35 | L | 4′-0″ | | 1 | 260 | 260 | E | 1′-2″ | | 7″ | | 10″ | | 10″ | | | | | | | |
| 16D36 | L | 4′-2″ | | 1 | 127 | 127 | E | 1′-4″ | | 7″ | | 10″ | | 10″ | | | | | | | |
| 16D37 | S | 6′-8″ | | 1 | 127 | 127 | E | 10″ | | 7″ | | 3′-11″ | | (0 1/2″) | | 6″ | | | | | |
| 16D38 | S | 6′-2″ | | 1 | 65 | 65 | E | 1′-0″ | | 7″ | | 3′-1″ | | (0 1/2″) | | 6″ | | | | | |
| 16D39 | Q | 6′-4 1/2″ | | 2 | 2 | 4 | E | 2′-2 1/2″ | | 2′-2″ | | 2′-0″ | | 1′-6 1/2″ | | 1′-7″ | | 1′-5″ | | 1′-5 1/2″ | |
| 16D40 | F | 5′-9″ | | 2 | 2 | 4 | E | 3′-9″ | | 2′-0″ | | 3′-9″ | | | | | | | | | |
| 16D41 | STR | 8′-0″ | | 8 | 2 | 16 | E | | | | | | | | | | | | | | |
| 19D01 | FF | 9′-3 1/2″ | | 38 | 11 | 418 | E | 3′-11 1/2″ | | 4′-0″ | | 8″ | | | | | | | | | |
| **PARAPET** | | | | | | | | | | | | | | | | | | | | | |
| 13P70 | STR | 9′-7″ | | 76 | 5 | 380 | E | | | | | | | | | | | | | | |
| 13P71 | G | 4′-11 1/2″ | | 19 | 15 | 285 | E | 2′-6″ | | 2′-5 1/2″ | | 2′-5″ | | 6″ | | | | | | | |
| 13P72 | STR | 13′-11″ | | 19 | 4 | 76 | E | | | | | | | | | | | | | | |
| 16P70 | L | 5′-2″ | | 2 | 5 | 10 | E | 1′-0″ | | 11″ | | 1′-2″ | | 1′-2″ | | | | | | | |
| 16P71 | X | 4′-11″ | | 2 | 4 | 8 | E | 1′-0″ | | 1′-0″ | | 1′-0″ | | 1′-0″ | | 5 1/2″ | | | | | |

A

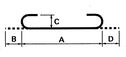

B

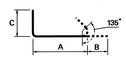

C

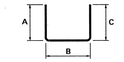

E

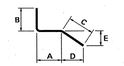

F

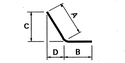

G

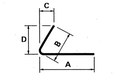

L

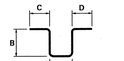

Q

S

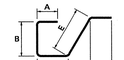

U

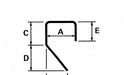

X

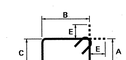

CC

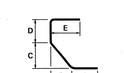

FF

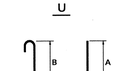

GG

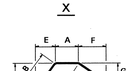

| STATE | FEDERAL PROJECT NO. | SHEET | TOTAL SHEETS |
|---|---|---|---|
| N.J. | FS-BR-0040 (168) | | |

STRUCTURE NO. 2004-164

ROUTE 22 OVER CONRAIL AND LIBERTY AVENUE
(FORMERLY STR. NO. 2004-153)

## BAR TYPES

NEW JERSEY DEPARTMENT OF TRANSPORTATION
BUREAU OF STRUCTURAL ENGINEERING

# BAR SCHEDULE – 4

ROUTE 22 LIBERTY AVENUE & CONRAIL BRIDGE
CONTRACT NO. 057009080

HILLSIDE TOWNSHIP MUNICIPALITY — UNION COUNTY

PB AMERICAS, INC.
CERTIFICATION OF AUTHORIZATION NO. 24GA28029800

BRUCE J. KARALIUS
NEW JERSEY PROFESSIONAL ENGINEER LICENSE NO. 26369

SCALE: AS SHOWN

BRIDGE SHEET NO. B69 of B128

176

PARSONS BRINCKERHOFF CADD DATA
OPERATOR marquena
PLOT DATE 01-DEC-2009 14:26
PENTABLE stf_full.tbl
DESIGN FILE I:\100404\structure\Bridge_1\bs01_d.dgn

| CONTROL SECTION | | JOB NO. | |
|---|---|---|---|
| DES. BY | J. BOGNAR | CHK. BY | M. CHEN<br>Y. CHEN |
| DWN. BY | J. BOGNAR | | |
| EST. BY | C. MANJUNATH | CHK. BY | M. CHEN |
| SPECS. BY | B. KARALIUS | | |
| IN CHARGE OF | B. KARALIUS | | |

## NOTES:

1. ALL REINFORCEMENT BENDS SHALL CONFORM TO THE LATEST ACI REQUIREMENTS.
2. ANY DAMAGE TO CORROSION PROTECTION OF REINFORCEMENT BARS SHALL BE REPAIRED AS PER SPECIFICATIONS.
3. BAR LOCATIONS MAY BE SHIFTED SLIGHTLY TO AVOID WEEP HOLES, BACKWALL PLATE, ANCHOR BOLTS, AND OTHER BARS. FIELD BENDS ARE NOT PERMITTED, UNLESS NOTED OTHERWISE.

## STRUCTURE UNIT:

A – ABUTMENT STEM
B – BACKWALL
C – PIER COLUMN, PIER CAP, CULVERT, HAMMERHEAD PIER, CRASH WALL, PIER WALL, CLOSURE POUR
D – DECK SLAB, DIAPHRAGMS
F – FOOTING
H – HEADER, HEADWALL
M – MEDIAN SLAB
P – PARAPET, BARRIER CURB, PYLON
R – APPROACH SLAB
S – SIDEWALK, CURB
T – TOE WALL
W – WINGWALL, RETAINING WALL

BAR SIZE
STRUCTURE UNIT
BAR NUMBER
16 B 22
EXAMPLE: 16B22 = A SIZE 16 BAR, NUMBER 22, PLACED IN THE BACKWALL OF THE ABUTMENT.

## CORROSION PROTECTION:

E – EPOXY COATED
G – GALVANIZED
S – SOLID STAINLESS STEEL

| REVISION | BY | CKD. | DATE |
|---|---|---|---|
| | | | |
| | | | |
| | | | |

| MARK | TYPE | LENGTH FT. | LENGTH IN. | NO. OF UNITS | NO. OF BARS/ UNIT | TOTAL NO. OF BARS | CORR. PROT. | A FT. | A IN. | B FT. | B IN. | C FT. | C IN. | REMARKS D FT. | D IN. | E FT. | E IN. | F FT. | F IN. | G FT. | G IN. |
|---|---|---|---|---|---|---|---|---|---|---|---|---|---|---|---|---|---|---|---|---|---|
| **CONSTRUCTION STAGE 2B – WEST ABUTMENT** | | | | | | | | | | | | | | | | | | | | | |
| **FOOTING** | | | | | | | | | | | | | | | | | | | | | |
| 13F15 | B | 5′ | -9″ | 4 | 15 | 60 | | 4′ | -6″ | 7″ | | 8″ | | | | | | | | | |
| 16F15 | A | 9′ | -0″ | 1 | 130 | 130 | | 8′ | -5″ | 7″ | | 5″ | | | | | | | | | |
| 16F16 | STR | 27′ | -10″ | 1 | 82 | 82 | | | | | | | | | | | | | | | |
| 16F17 | STR | 25′ | -0″ | 2 | 10 | 20 | | | | | | | | | | | | | | | |
| 19F15 | Q | 18′ | -1 1/2″ | 1 | 20 | 20 | | 2′ | -7 1/2″ | 8′ | -0″ | 7′ | -6″ | 5′ | -8″ | 5′ | -8 1/2″ | | | 7′ | -6″ |
| 19F16 | STR | 19′ | -6″ | 1 | 7 | 7 | | | | | | | | | | | | | | | |
| 29F15 | STR | 19′ | -6″ | 2 | 107 | 214 | | | | | | | | | | | | | | | |
| 32F15 | A | 12′ | -10″ | 1 | 98 | 98 | | 11′ | -5″ | 1′ | -5″ | 1′ | -1 1/2″ | | | | | | | | |
| **STEM** | | | | | | | | | | | | | | | | | | | | | |
| 13A15 | STR | 16′ | -7 1/2″ | 1 | 65 | 65 | | | | | | | | | | | | | | | |
| 13A16 | STR | 32′ | -6″ | 2 | 27 | 54 | | | | | | | | | | | | | | | |
| 13A17 | STR | 17′ | -3 1/2″ | 1 | 27 | 27 | | | | | | | | | | | | | | | |
| 13A18 | STR | 12′ | -2 1/2″ | 1 | 28 | 28 | | | | | | | | | | | | | | | |
| 13A19 | Q | 7′ | -3 1/2″ | 1 | 27 | 27 | | 3′ | -3 1/2″ | 2′ | -0″ | 2′ | -0″ | 1′ | -8 1/2″ | 1′ | -1″ | | | 2′ | -0″ |
| 13A20 | STR | 9′ | -9 1/2″ | 1 | 27 | 27 | | | | | | | | | | | | | | | |
| 13A21 | STR | 6′ | -6″ | 1 | 28 | 28 | | | | | | | | | | | | | | | |
| 13A22 | F | 6′ | -10″ | 1 | 6 | 6 | | 4′ | -7″ | 2′ | -3″ | 4′ | -7″ | | | | | | | | |
| 13A23 | STR | 5′ | -0″ | 1 | 28 | 28 | | | | | | | | | | | | | | | |
| 16A15 | STR | 11′ | -3″ | 1 | 130 | 130 | | | | | | | | | | | | | | | |
| 16A17 | STR | 5′ | -11 1/2″ | 1 | 45 | 45 | E | | | | | | | | | | | | | | |
| 16A18 | C | 11′ | -1″ | 1 | 52 | 52 | E | 4′ | -9″ | 1′ | -7″ | 4′ | -9″ | | | | | | | | |
| 16A19 | STR | 32′ | -6 1/2″ | 1 | 3 | 3 | E | | | | | | | | | | | | | | |
| 16A20 | F | 5′ | -6″ | 5 | 7 | 35 | E | 3′ | -6″ | 2′ | -0″ | 3′ | -6″ | | | | | | | | |
| 16A21 | STR | 17′ | -3 1/2″ | 1 | 3 | 3 | E | | | | | | | | | | | | | | |
| 16A22 | C | 13′ | -4 1/2″ | 1 | 20 | 20 | E | 5′ | -10 1/2″ | 1′ | -7 1/2″ | 5′ | -10 1/2″ | | | | | | | | |
| 16A23 | C | 4′ | -2 1/2″ | 5 | 5 | 25 | E | 10″ | | 2′ | -6 1/2″ | 10″ | | GRILLAGE | | | | | | | |
| 16A24 | C | 4′ | -8″ | 5 | 5 | 25 | E | 10″ | | 3′ | -0″ | 10″ | | GRILLAGE | | | | | | | |
| 19A15 | STR | 12′ | -7″ | 1 | 10 | 10 | | | | | | | | | | | | | | | |
| 22A15 | STR | 14′ | -10″ | 1 | 88 | 88 | | | | | | | | | | | | | | | |
| 29A15 | STR | 14′ | -0″ | 1 | 88 | 88 | | | | | | | | | | | | | | | |
| 29A16 | STR | 16′ | -10″ | 1 | 10 | 10 | | | | | | | | | | | | | | | |
| **BACKWALL** | | | | | | | | | | | | | | | | | | | | | |
| 13B15 | STR | 32′ | -6 1/2″ | 2 | 5 | 10 | E | | | | | | | | | | | | | | |
| 13B16 | STR | 16′ | -5″ | 2 | 5 | 10 | E | | | | | | | | | | | | | | |
| 13B17 | STR | 9′ | -8″ | 1 | 5 | 5 | E | | | | | | | | | | | | | | |
| 13B18 | STR | 8′ | -11″ | 1 | 5 | 5 | E | | | | | | | | | | | | | | |
| 13B19 | Q | 4′ | -8″ | 1 | 5 | 5 | E | 8″ | | 2′ | -0″ | 2′ | -0″ | 1′ | -8 1/2″ | 1′ | -1″ | | | 2′ | -0″ |
| 13B20 | STR | 4′ | -6″ | 1 | 5 | 5 | E | | | | | | | | | | | | | | |
| 13B21 | STR | 2′ | -0″ | 1 | 8 | 8 | E | | | | | | | | | | | | | | |
| 16B15 | C | 6′ | -8″ | 1 | 53 | 53 | E | 2′ | -10″ | 1′ | -0″ | 2′ | -10″ | | | | | | | | |
| 19B15 | GG | 15′ | -2 1/2″ | 1 | 20 | 20 | E | 7 1/2″ | | 6′ | -11 1/2″ | 6′ | -11 1/2″ | 6′ | -11 1/2″ | | | | | 6′ | -11 1/2″ |
| **HEADER** | | | | | | | | | | | | | | | | | | | | | |
| 13H15 | STR | 32′ | -6 1/2″ | 2 | 3 | 6 | E | | | | | | | | | | | | | | |
| 13H16 | STR | 16′ | -5″ | 2 | 3 | 6 | E | | | | | | | | | | | | | | |
| 13H17 | V | 8′ | -10 1/2″ | 2 | 1 | 2 | E | 1′ | -0″ | 1′ | -10 1/2″ | 7′ | -1 1/2″ | | | | | | | | |
| 13H18 | STR | 9′ | -8″ | 2 | 3 | 6 | E | | | | | | | | | | | | | | |
| 13H19 | Q | 4′ | -8″ | 1 | 3 | 3 | E | 8″ | | 2′ | -0″ | 2′ | -0″ | 1′ | -8 1/2″ | 1′ | -1″ | | | 2′ | -0″ |
| **PARAPET** | | | | | | | | | | | | | | | | | | | | | |
| 13P15 | STR | 9′ | -8″ | 2 | 3 | 6 | E | | | | | | | | | | | | | | |
| **EAST ABUTMENT** | | | | | | | | | | | | | | | | | | | | | |
| **FOOTING** | | | | | | | | | | | | | | | | | | | | | |
| 13F50 | B | 5′ | -9″ | 4 | 25 | 100 | | 4′ | -6″ | 7″ | | 8″ | | | | | | | | | |
| 16F50 | A | 9′ | -0″ | 1 | 231 | 231 | | 8′ | -5″ | 7″ | | 5″ | | | | | | | | | |
| 16F51 | STR | 33′ | -4″ | 1 | 107 | 107 | | | | | | | | | | | | | | | |
| 16F52 | STR | 19′ | -10 1/2″ TO 31′ -3″ VAR. 1′ -7 1/2″ | 2 | 8 | 16 | | | | | | | | | | | | | | | |
| 16F53 | F | 9′ | -8 1/2″ | 1 | 20 | 20 | | 7′ | -0″ | 2′ | -8 1/2″ | 5′ | -0″ | 4′ | -11 1/2″ | | | | | | |
| 16F54 | STR | 19′ | -6″ | 1 | 6 | 6 | | | | | | | | | | | | | | | |
| 19F50 | A | 8′ | -11″ | 1 | 6 | 6 | | 8′ | -3″ | 8″ | | 6″ | | | | | | | | | |
| 29F50 | STR | 19′ | -6″ | 2 | 164 | 328 | | | | | | | | | | | | | | | |
| 29F51 | STR | 11′ | -9″ TO 19′ -4″ VAR. 3 1/2″ | 2 | 27 | 54 | | | | | | | | | | | | | | | |
| 32F50 | A | 12′ | -10″ | 1 | 170 | 170 | | 11′ | -5″ | 1′ | -5″ | 1′ | -1 1/2″ | | | | | | | | |
| **STEM** | | | | | | | | | | | | | | | | | | | | | |
| 13A50 | STR | 17′ | -3 1/2″ | 1 | 64 | 64 | | | | | | | | | | | | | | | |
| 13A51 | STR | 16′ | -10″ | 1 | 53 | 53 | | | | | | | | | | | | | | | |
| 13A52 | STR | 33′ | -9 1/2″ | 2 | 28 | 56 | | | | | | | | | | | | | | | |
| 13A53 | STR | 29′ | -6″ | 2 | 28 | 56 | | | | | | | | | | | | | | | |
| 13A54 | STR | 28′ | -0″ | 1 | 28 | 28 | | | | | | | | | | | | | | | |
| 13A55 | STR | 16′ | -0″ | 1 | 28 | 28 | | | | | | | | | | | | | | | |

A

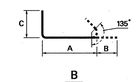

B

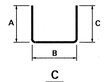

C

F

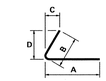

G

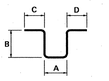

L

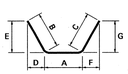

Q

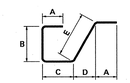

S

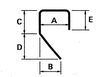

U

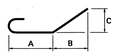

V

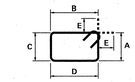

X

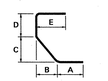

CC

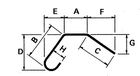

GG

| STATE | FEDERAL PROJECT NO. | SHEET | TOTAL SHEETS |
|---|---|---|---|
| N.J. | FS-BR-0040 (168) | | |

STRUCTURE NO. 2004-164

ROUTE 22 OVER CONRAIL AND LIBERTY AVENUE (FORMERLY STR. NO. 2004-153)

## BAR TYPES

NEW JERSEY DEPARTMENT OF TRANSPORTATION
BUREAU OF STRUCTURAL ENGINEERING

# BAR SCHEDULE – 5

ROUTE 22 LIBERTY AVENUE & CONRAIL BRIDGE
CONTRACT NO. 057009080

HILLSIDE TOWNSHIP MUNICIPALITY — UNION COUNTY

PB AMERICAS, INC.

CERTIFICATION OF AUTHORIZATION NO. 24GA28029800

BRUCE J. KARALIUS
NEW JERSEY PROFESSIONAL ENGINEER LICENSE NO. 26369

SCALE: AS SHOWN

BRIDGE SHEET NO. B70 of B128

177

PARSONS BRINCKERHOFF CADD DATA

| | |
|---|---|
| OPERATOR | marruena |
| PLOT DATE | 01-DEC-2009 14:26 |
| PENTABLE | str-full.tbl |
| DESIGN FILE | I:\100404\struc\Bridge_Nbs01_e.dgn |

| CONTROL SECTION | | JOB NO. | |
|---|---|---|---|
| DES. BY | J. BOGNAR | CHK. BY | M. CHEN<br>Y. CHEN |
| DWN. BY | J. BOGNAR | | |
| EST. BY | C. MANJUNATH | CHK. BY | M. CHEN |
| SPECS. BY | B. KARALIUS | | |
| IN CHARGE OF | B. KARALIUS | | |

## NOTES:

1. ALL REINFORCEMENT BENDS SHALL CONFORM TO THE LATEST ACI REQUIREMENTS.
2. ANY DAMAGE TO CORROSION PROTECTION OF REINFORCEMENT BARS SHALL BE REPAIRED AS PER SPECIFICATIONS.
3. BAR LOCATIONS MAY BE SHIFTED SLIGHTLY TO AVOID WEEP HOLES, BACKWALL PLATE, ANCHOR BOLTS, AND OTHER BARS. FIELD BENDS ARE NOT PERMITTED, UNLESS NOTED OTHERWISE.

## STRUCTURE UNIT:

A – ABUTMENT STEM
B – BACKWALL
C – PIER COLUMN, PIER CAP, CULVERT, HAMMERHEAD PIER, CRASH WALL, PIER WALL, CLOSURE POUR
D – DECK SLAB, DIAPHRAGMS
F – FOOTING
H – HEADER, HEADWALL
M – MEDIAN SLAB
P – PARAPET, BARRIER CURB, PYLON
R – APPROACH SLAB
S – SIDEWALK, CURB
T – TOE WALL
W – WINGWALL, RETAINING WALL

BAR SIZE
STRUCTURE UNIT
BAR NUMBER
16 B 22
EXAMPLE: 16B22 = A SIZE 16 BAR, NUMBER 22, PLACED IN THE BACKWALL OF THE ABUTMENT.

## CORROSION PROTECTION:

E – EPOXY COATED
G – GALVANIZED
S – SOLID STAINLESS STEEL

| REVISION | BY | CKD. | DATE |
|---|---|---|---|
| | | | |
| | | | |
| | | | |
| | | | |

| MARK | TYPE | LENGTH FT. IN. | NO. OF UNITS | NO. OF BARS/ UNIT | TOTAL NO. OF BARS | CORR. PROT. | A FT. IN. | B FT. IN. | C FT. IN. | REMARKS D FT. IN. | E FT. IN. | F FT. IN. | G FT. IN. |
|---|---|---|---|---|---|---|---|---|---|---|---|---|---|
| 13A56 | STR | 5'-2" | 1 | 28 | 28 | | | | | | | | |
| 13A57 | Q | 7'-1" | 1 | 28 | 28 | | 3'-6½" | 1'-9" | 1'-9" | 10½" | 1'-6½" | | 1'-9" |
| 13A58 | STR | 11'-11" | 1 | 4 | 4 | | | | | | | | |
| 13A59 | STR | 5'-0" | 2 | 13 | 26 | | | | | | | | |
| 13A60 | STR | 5'-0" | 2 | 4 | 8 | E | | | | | | | |
| 13A61 | F | 6'-10" | 1 | 4 | 4 | | 4'-7" | 2'-3" | 4'-7" | | | | |
| 13A62 | STR | 5'-4" | 1 | 28 | 28 | | | | | | | | |
| 13A63 | STR | 16'-1" | 1 | 28 | 28 | | | | | | | | |
| 13A64 | STR | 10'-0" | 1 | 13 | 13 | | | | | | | | |
| 16A50 | STR | 11'-3" | 1 | 225 | 225 | | | | | | | | |
| 16A51 | STR | 6'-7½" | 1 | 51 | 51 | | | | | | | | |
| 16A52 | STR | 6'-2½" | 1 | 31 | 31 | | | | | | | | |
| 16A53 | C | 11'-1" | 1 | 87 | 87 | | 4'-9" | 1'-7" | 4'-9" | | | | |
| 16A54 | STR | 28'-0" | 1 | 3 | 3 | E | | | | | | | |
| 16A55 | STR | 33'-9½" | 1 | 3 | 3 | E | | | | | | | |
| 16A56 | STR | 29'-6" | 1 | 3 | 3 | E | | | | | | | |
| 16A57 | F | 5'-6" | 1 | 78 | 78 | E | 3'-6" | 2'-0" | 3'-6" | | | | |
| 16A58 | C | 4'-2" | 6 | 4 | 24 | E | 10" | 2'-6" | 10" | GRILLAGE | | | |
| 16A59 | C | 4'-2½" | 6 | 4 | 24 | E | 10" | 2'-6½" | 10" | GRILLAGE | | | |
| 16A60 | C | 12'-6½" TO 15'-9" VAR. 5½" | 1 | 8 | 8 | E | 5'-10" | 10½" TO 4'-1" VAR. 5½" | 5'-10" | | | | |
| 16A61 | C | 13'-6½" | 1 | 28 | 28 | E | 5'-11½" | 1'-7½" | 5'-11½" | | | | |
| 16A62 | C | 27'-0" TO 22'-6" VAR. 6" | 1 | 10 | 10 | | 12'-8" TO 10'-5" VAR. 3" | 1'-8" | 12'-8" TO 10'-5" VAR. 3" | | | | |
| 19A50 | C | 10'-7½" | 1 | 4 | 4 | E | 5'-0" | 7½" | 5'-0" | | | | |
| 19A51 | STR | 11'-10" | 1 | 6 | 6 | | | | | | | | |
| 19A52 | STR | 12'-10" | 1 | 8 | 8 | | | | | | | | |
| 22A50 | STR | 14'-10" | 1 | 161 | 161 | | | | | | | | |
| 29A50 | STR | 14'-0" | 1 | 161 | 161 | | | | | | | | |
| 29A51 | STR | 17'-0" | 1 | 8 | 8 | | | | | | | | |

### BACKWALL

| MARK | TYPE | LENGTH FT. IN. | NO. OF UNITS | NO. OF BARS/ UNIT | TOTAL NO. OF BARS | CORR. PROT. | A FT. IN. | B FT. IN. | C FT. IN. | REMARKS D FT. IN. | E FT. IN. | F FT. IN. | G FT. IN. |
|---|---|---|---|---|---|---|---|---|---|---|---|---|---|
| 13B50 | STR | 27'-6" | 1 | 5 | 5 | E | | | | | | | |
| 13B51 | STR | 22'-1" | 1 | 5 | 5 | E | | | | | | | |
| 13B52 | STR | 33'-9½" | 2 | 5 | 10 | E | | | | | | | |
| 13B53 | STR | 29'-6" | 2 | 5 | 10 | E | | | | | | | |
| 13B54 | STR | 21'-0" | 1 | 5 | 5 | E | | | | | | | |
| 13B55 | STR | 15'-7" | 1 | 18 | 18 | E | | | | | | | |
| 16B50 | C | 6'-8" | 1 | 95 | 95 | E | 2'-10" | 1'-0" | 2'-10" | | | | |
| 19B50 | GG | 15'-1½" | 2 | 22 | 44 | E | 7½" | 6'-11" | 6'-11" | 6'-11" | | | 6'-11" |

### HEADER

| MARK | TYPE | LENGTH FT. IN. | NO. OF UNITS | NO. OF BARS/ UNIT | TOTAL NO. OF BARS | CORR. PROT. | A FT. IN. | B FT. IN. | C FT. IN. | REMARKS |
|---|---|---|---|---|---|---|---|---|---|---|
| 13H50 | STR | 27'-10" | 2 | 3 | 6 | E | | | | |
| 13H51 | STR | 33'-9½" | 2 | 3 | 6 | E | | | | |
| 13H52 | STR | 29'-6" | 2 | 3 | 6 | E | | | | |
| 13H53 | V | 13'-8" | 1 | 2 | 2 | E | 1'-0" | 2'-11½" | 11'-9½" | |
| 13H54 | STR | 21'-0" | 2 | 3 | 6 | E | | | | |

### PARAPET

| MARK | TYPE | LENGTH FT. IN. | NO. OF UNITS | NO. OF BARS/ UNIT | TOTAL NO. OF BARS | CORR. PROT. | A FT. IN. | B FT. IN. | C FT. IN. | REMARKS |
|---|---|---|---|---|---|---|---|---|---|---|
| 13P50 | STR | 10'-4" | 1 | 3 | 3 | E | | | | |

## ABUTMENT WALL EXTENSION

### FOOTING

| MARK | TYPE | LENGTH FT. IN. | NO. OF UNITS | NO. OF BARS/ UNIT | TOTAL NO. OF BARS | CORR. PROT. | A FT. IN. | B FT. IN. | C FT. IN. | REMARKS |
|---|---|---|---|---|---|---|---|---|---|---|
| 13F66 | A | 8'-0" | 1 | 38 | 38 | | 7'-6" | 6" | 4" | |
| 13F67 | STR | 7'-6" | 1 | 54 | 54 | | | | | |
| 16F66 | STR | 27'-6" | 1 | 34 | 34 | | | | | |
| 19F66 | A | 8'-8" | 1 | 108 | 108 | | 8'-0" | 8" | 6" | |
| 19F67 | STR | 7'-6" | 1 | 107 | 107 | | | | | |

### WALL

| MARK | TYPE | LENGTH FT. IN. | NO. OF UNITS | NO. OF BARS/ UNIT | TOTAL NO. OF BARS | CORR. PROT. | A FT. IN. | B FT. IN. | C FT. IN. | REMARKS |
|---|---|---|---|---|---|---|---|---|---|---|
| 13W66 | STR | 6'-10" | 1 | 19 | 19 | | | | | |
| 13W67 | STR | 9'-9" | 1 | 19 | 19 | | | | | |
| 13W68 | STR | 26'-6" | 4 | 1 | 4 | | | | | |
| 13W69 | STR | 26'-5" | 1 | 44 | 44 | | | | | |
| 19W66 | STR | 7'-4" | 1 | 54 | 54 | | | | | |
| 19W67 | STR | 10'-3" | 1 | 54 | 54 | | | | | |
| 19W68 | C | 10'-7½" | 1 | 56 | 56 | E | 5'-0" | 7½" | 5'-0" | |

### PARAPET

| MARK | TYPE | LENGTH FT. IN. | NO. OF UNITS | NO. OF BARS/ UNIT | TOTAL NO. OF BARS | CORR. PROT. | A FT. IN. | B FT. IN. | C FT. IN. | REMARKS |
|---|---|---|---|---|---|---|---|---|---|---|
| 13P66 | STR | 26'-6" | 4 | 4 | 16 | E | | | | |

## CENTER PIER

### FOOTING

| MARK | TYPE | LENGTH FT. IN. | NO. OF UNITS | NO. OF BARS/ UNIT | TOTAL NO. OF BARS | CORR. PROT. | A FT. IN. | B FT. IN. | C FT. IN. | REMARKS |
|---|---|---|---|---|---|---|---|---|---|---|
| 13F100 | B | 5'-9" | 6 | 10 | 60 | | 4'-6" | 7" | 8" | SEISMIC HOOK |
| 16F100 | B | 4'-7½" | 5 | 18 | 90 | | 3'-8" | 5½" | 6" | CROSS TIE |
| 16F101 | STR | 6'-6" | 1 | 5 | 5 | | | | | NOTCH BARS |
| 16F102 | STR | 4'-0" | 1 | 7 | 7 | | | | | NOTCH BARS |
| 19F100 | STR | 18'-6" | 1 | 38 | 38 | | | | | |
| 19F101 | STR | 37'-6" | 1 | 19 | 19 | | | | | |
| 19F102 | STR | 21'-8" | 2 | 5 | 10 | | | | | |
| 19F103 | C | 9'-8" | 2 | 5 | 10 | | 3'-0" | 3'-8" | 3'-0" | |

| STATE | FEDERAL PROJECT NO. | SHEET | TOTAL SHEETS |
|---|---|---|---|
| N.J. | FS-BR-0040 (168) | | |

STRUCTURE NO. 2004-164

ROUTE 22 OVER CONRAIL AND LIBERTY AVENUE (FORMERLY STR. NO. 2004-153)

## BAR TYPES

## NOTES:

1. ALL REINFORCEMENT BENDS SHALL CONFORM TO THE LATEST ACI REQUIREMENTS.
2. ANY DAMAGE TO CORROSION PROTECTION OF REINFORCEMENT BARS SHALL BE REPAIRED AS PER SPECIFICATIONS.
3. BAR LOCATIONS MAY BE SHIFTED SLIGHTLY TO AVOID WEEP HOLES, BACKWALL PLATE, ANCHOR BOLTS, AND OTHER BARS. FIELD BENDS ARE NOT PERMITTED, UNLESS NOTED OTHERWISE.

## STRUCTURE UNIT:

- A – ABUTMENT STEM
- B – BACKWALL
- C – PIER COLUMN, PIER CAP, CULVERT, HAMMERHEAD PIER, CRASH WALL, PIER WALL, CLOSURE POUR
- D – DECK SLAB, DIAPHRAGMS
- F – FOOTING
- H – HEADER, HEADWALL
- M – MEDIAN SLAB
- P – PARAPET, BARRIER CURB, PYLON
- R – APPROACH SLAB
- S – SIDEWALK, CURB
- T – TOE WALL
- W – WINGWALL, RETAINING WALL

BAR SIZE / STRUCTURE UNIT / BAR NUMBER

16 B 22

EXAMPLE: 16B22 = A SIZE 16 BAR, NUMBER 22, PLACED IN THE BACKWALL OF THE ABUTMENT.

## CORROSION PROTECTION:

- E – EPOXY COATED
- G – GALVANIZED
- S – SOLID STAINLESS STEEL

| REVISION | BY | CKD. | DATE |
|---|---|---|---|
| | | | |

PARSONS BRINCKERHOFF CADD DATA

| | |
|---|---|
| OPERATOR | maruema |
| PLOT DATE | 01-DEC-2009 14:26 |
| PENTABLE | str-full.tbl |
| DESIGN FILE | T:\100404\struc\Bridge_1\bs01_f.dgn |

| CONTROL SECTION | | JOB NO. |
|---|---|---|
| DES. BY | J. BOGNAR | CHK. BY: M. CHEN, Y. CHEN |
| DWN. BY | J. BOGNAR | |
| EST. BY | C. MANJUNATH | CHK. BY: M. CHEN |
| SPECS. BY | B. KARALIUS | |
| IN CHARGE OF | B. KARALIUS | |

NEW JERSEY DEPARTMENT OF TRANSPORTATION
BUREAU OF STRUCTURAL ENGINEERING

# BAR SCHEDULE – 6

ROUTE 22 LIBERTY AVENUE & CONRAIL BRIDGE
CONTRACT NO. 057009080

HILLSIDE TOWNSHIP MUNICIPALITY — UNION COUNTY

PB AMERICAS, INC.
CERTIFICATION OF AUTHORIZATION NO. 24GA28029800
BRUCE J. KARALIUS
NEW JERSEY PROFESSIONAL ENGINEER LICENSE NO. 26369

SCALE: AS SHOWN

BRIDGE SHEET NO. B71 of B128

178

| MARK | TYPE | LENGTH FT. | IN. | NO. OF UNITS | NO. OF BARS/ UNIT | TOTAL NO. OF BARS | CORR. PROT. | A FT. | IN. | B FT. | IN. | C FT. | IN. | REMARKS D FT. | IN. | E FT. | IN. | F FT. | IN. | G FT. | IN. |
|---|---|---|---|---|---|---|---|---|---|---|---|---|---|---|---|---|---|---|---|---|---|
| 25F100 | STR | 18′-6″ | | 1 | 72 | 72 | | | | | | | | | | | | | | | |
| 32F100 | F | 18′-8½″ | | 2 | 35 | 70 | | 16′-10½″ | | 1′-10″ | | 16′-10½″ | | | | | | | | | |
| 32F101 | G | 18′-9″ | | 2 | 5 | 10 | | 16′-11″ | | 1′-10″ | | 2½″ | | 1′-10½″ | | | | | | | |
| 32F102 | STR | 37′-6″ | | 1 | 37 | 37 | | | | | | | | | | | | | | | |
| **COLUMN** | | | | | | | | | | | | | | | | | | | | | |
| 16C100 | B | 4′-7½″ | | 1 | 436 | 436 | | 3′-8″ | | 5½″ | | 6″ | | CROSS TIE | | | | | | | |
| 19C100 | STR | 21′-8½″ TO 22′-8½″ VAR. 1½″ | | 2 | 9 | 18 | | | | | | | | | | | | | | | |
| 19C101 | C | 9′-8″ | | 2 | 23 | 46 | | 3′-0″ | | 3′-8″ | | 3′-0″ | | | | | | | | | |
| 19C102 | STR | 22′-11″ TO 26′-2″ VAR. 3″ | | 2 | 14 | 28 | | | | | | | | | | | | | | | |
| 32C100 | A | 19′-0½″ | | 2 | 35 | 70 | | 17′-7½″ | | 1′-5″ | | 1′-1½″ | | | | | | | | | |
| 32C101 | A | 10′-5″ TO 23′-11″ VAR. 4′-6″ | | 4 | 4 | 16 | | 9′-0″ TO 22′-6″ VAR. 4′-6″ | | 1′-5″ | | 1′-1½″ | | | | | | | | | |
| 32C102 | A | 19′-2″ | | 1 | 10 | 10 | | 17′-9″ | | 1′-5″ | | 1′-1½″ | | | | | | | | | |
| **CAP** | | | | | | | | | | | | | | | | | | | | | |
| 16C105 | B | 4′-7½″ | | 1 | 110 | 110 | | 3′-8″ | | 5½″ | | 6″ | | CROSS TIE | | | | | | | |
| 16C106 | X | 20′-5″ | | 2 | 21 | 42 | | 2′-11″ | | 6′-10″ | | 2′-11″ | | 6′-10″ | | 5½″ | | | | | |
| 16C107 | X | 15′-3″ TO 18′-7″ VAR. 4″ | | 4 | 11 | 44 | | 2′-11″ | | 4′-3″ TO 5′-11″ VAR. 2″ | | 2′-11″ | | 4′-3″ TO 5′-11″ VAR. 2″ | | 5½″ | | | | | |
| 16C108 | C | 8′-2″ | | 6 | 9 | 54 | E | 2′-1½″ | | 3′-11″ | | 2′-1½″ | | GRILLAGE BAR | | | | | | | |
| 16C109 | C | 8′-0″ | | 2 | 5 | 10 | | 2′-0″ | | 4′-0″ | | 2′-0″ | | | | | | | | | |
| 16C110 | X | 16′-4″ | | 1 | 5 | 5 | E | 3′-8″ | | 4′-0½″ | | 3′-8″ | | 4′-0½″ | | 5½″ | | GRILLAGE BAR | | | |
| 16C111 | C | 7′-8½″ | | 6 | 10 | 60 | E | 2′-1″ | | 3′-6½″ | | 2′-1″ | | GRILLAGE BAR | | | | | | | |
| 19C105 | STR | 26′-3½″ TO 26′-9½″ VAR. 1½″ | | 2 | 5 | 10 | | | | | | | | | | | | | | | |
| 19C106 | C | 9′-8″ | | 2 | 5 | 10 | | 3′-0″ | | 3′-8″ | | 3′-0″ | | | | | | | | | |
| 19C107 | Q | 22′-5½″ | | 2 | 7 | 14 | | 13′-4″ | | 5′-0″ | | 4′-1½″ | | 4′-11″ | | 1′-0½″ | | 9½″ | | 4′-0½″ | |
| 19C108 | STR | 29′-3½″ | | 1 | 7 | 7 | | | | | | | | | | | | | | | |
| 19C109 | X | 20′-9″ | | 4 | 32 | 128 | | 2′-11″ | | 6′-10″ | | 2′-11″ | | 6′-10″ | | 7½″ | | | | | |
| 19C110 | X | 19′-1″ TO 20′-9″ VAR. 2″ | | 4 | 11 | 44 | | 2′-11″ | | 6′-0″ TO 6′-10″ VAR. 1″ | | 2′-11″ | | 6′-0″ TO 6′-10″ VAR. 1″ | | 7½″ | | | | | |
| 22C105 | STR | 53′-8″ | | 2 | 6 | 12 | | | | | | | | | | | | | | | |
| 22C106 | STR | 35′-8″ TO 52′-2″ VAR. 8′-3″ | | 2 | 3 | 6 | | | | | | | | | | | | | | | |

| MARK | TYPE | LENGTH FT. | IN. | NO. OF UNITS | NO. OF BARS/ UNIT | TOTAL NO. OF BARS | CORR. PROT. | A FT. | IN. | B FT. | IN. | C FT. | IN. | REMARKS D FT. | IN. | E FT. | IN. | F FT. | IN. | G FT. | IN. |
|---|---|---|---|---|---|---|---|---|---|---|---|---|---|---|---|---|---|---|---|---|---|
| 36C105 | C | 57′-6″ | | 1 | 10 | 10 | | 2′-0″ | | 53′-6″ | | 2′-0″ | | | | | | | | | |
| 36C106 | STR | 53′-0″ | | 1 | 10 | 10 | | | | | | | | | | | | | | | |
| **DECK SLAB** | | | | | | | | | | | | | | | | | | | | | |
| 13D50 | V | 2′-9″ | | 1 | 179 | 179 | E | 9″ | | 4½″ | | 1′-5½″ | | | | | | | | | |
| 13D51 | G | 2′-10½″ | | 8 | 21 | 168 | E | 1′-6″ | | 1′-4½″ | | | | 1′-4½″ | | | | | | | |
| 13D52 | U | 5′-3″ | | 18 | 32 | 576 | E | 11″ | | 9″ | | 1′-1″ | | 1′-0″ | | 2′-0″ | | | | | |
| 16D50 | STR | 20′-11″ | | 1 | 438 | 438 | E | | | | | | | | | | | | | | |
| 16D51 | STR | 29′-3″ | | 1 | 314 | 314 | E | | | | | | | | | | | | | | |
| 16D52 | STR | 1′-5½″ TO 20′-5½″ VAR. 9½″ | | 1 | 25 | 25 | E | | | | | | | | | | | | | | |
| 16D53 | STR | 2′-10½″ TO 27′-5″ VAR. 9½″ | | 1 | 32 | 32 | E | | | | | | | | | | | | | | |
| 16D54 | STR | 2′-6½″ TO 28′-9½″ VAR. 3½″ | | 1 | 91 | 91 | E | | | | | | | | | | | | | | |
| 16D55 | STR | 1′-6″ TO 21′-0½″ VAR. 3½″ | | 1 | 68 | 68 | E | | | | | | | | | | | | | | |
| 16D56 | A | 25′-4″ | | | 264 | 264 | E | 24′-9″ | | 7″ | | 5″ | | | | | | | | | |
| 16D57 | A | 26′-0″ | | 1 | 157 | 157 | E | 25′-5″ | | 7″ | | 5″ | | | | | | | | | |
| 16D58 | A | 33′-9″ | | 1 | 157 | 157 | E | 33′-2″ | | 7″ | | 5″ | | | | | | | | | |
| 16D59 | A | 17′-7″ | | 1 | 157 | 157 | E | 17′-0″ | | 7″ | | 5″ | | | | | | | | | |
| 16D60 | A | 2′-2½″ TO 24′-4½″ VAR. 9½″ | | 1 | 29 | 29 | E | 1′-7½″ TO 23′-9½″ VAR. 9½″ | | 7″ | | 5″ | | | | | | | | | |
| 16D61 | STR | 2′-5½″ TO 23′-10″ VAR. 9½″ | | 1 | 28 | 28 | E | | | | | | | | | | | | | | |
| 16D62 | STR | 2′-6½″ TO 25′-0″ VAR. 3½″ | | 1 | 78 | 78 | E | | | | | | | | | | | | | | |
| 16D63 | A | 2′-1″ TO 25′-5″ VAR. 3½″ | | 1 | 81 | 81 | E | 1′-6″ TO 24′-10″ VAR. 3½″ | | 7″ | | 5″ | | | | | | | | | |
| 16D64 | A | 5′-10″ | | 1 | 313 | 313 | E | 5′-3″ | | 7″ | | 5″ | | | | | | | | | |
| 16D65 | STR | 40′-0″ | | 1 | 637 | 637 | E | | | | | | | | | | | | | | |
| 16D66 | STR | 7′-0″ TO 37′-0″ VAR. 5″ | | 1 | 73 | 73 | E | | | | | | | | | | | | | | |
| 16D67 | STR | 3′-8″ TO 39′-10″ VAR. 1′-2″ | | 1 | 32 | 32 | E | | | | | | | | | | | | | | |
| 16D68 | STR | 4′-2″ TO 47′-4″ VAR. 1′-2″ | | 1 | 38 | 38 | E | | | | | | | | | | | | | | |
| 16D69 | STR | 33′-10″ | | 5 | 7 | 35 | E | | | | | | | | | | | | | | |

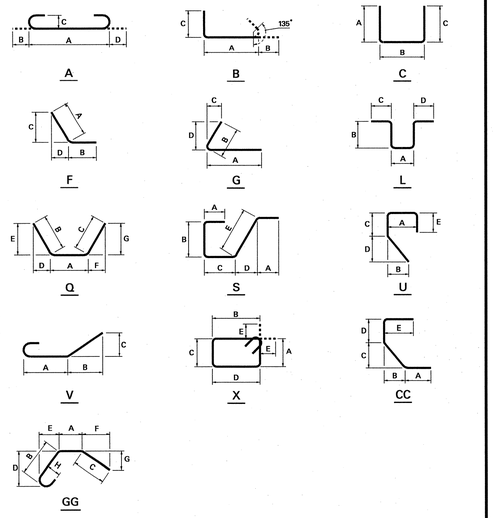


## BAR TYPES

| STATE | FEDERAL PROJECT NO. | SHEET | TOTAL SHEETS |
|---|---|---|---|
| N.J. | FS-BR-0040 (168) | | |

STRUCTURE NO. 2004-164

ROUTE 22 OVER CONRAIL AND LIBERTY AVENUE (FORMERLY STR. NO. 2004-153)

NEW JERSEY DEPARTMENT OF TRANSPORTATION
BUREAU OF STRUCTURAL ENGINEERING

# BAR SCHEDULE – 7

ROUTE 22 LIBERTY AVENUE & CONRAIL BRIDGE
CONTRACT NO. 057009080

HILLSIDE TOWNSHIP MUNICIPALITY — UNION COUNTY

PB AMERICAS, INC.
CERTIFICATION OF AUTHORIZATION NO. 24GA28029800

BRUCE J. KARALIUS
NEW JERSEY PROFESSIONAL ENGINEER LICENSE NO. 26369

SCALE: AS SHOWN

BRIDGE SHEET NO. B72 of B128

179

PARSONS BRINCKERHOFF CADD DATA
OPERATOR marusema
PLOT DATE 01-DEC-2009 14:26
PENTABLE str-full.tbl
DESIGN FILE T:\00404\struc\Bridge\bs01_g.dgn

| CONTROL SECTION | | JOB NO. | |
|---|---|---|---|
| DES. BY | J. BOGNAR | CHK. BY | M. CHEN<br>Y. CHEN |
| DWN. BY | J. BOGNAR | | |
| EST. BY | C. MANJUNATH | CHK. BY | M. CHEN |
| SPECS. BY | B. KARALIUS | | |
| IN CHARGE OF | B. KARALIUS | | |

## NOTES:

1. ALL REINFORCEMENT BENDS SHALL CONFORM TO THE LATEST ACI REQUIREMENTS.
2. ANY DAMAGE TO CORROSION PROTECTION OF REINFORCEMENT BARS SHALL BE REPAIRED AS PER SPECIFICATIONS.
3. BAR LOCATIONS MAY BE SHIFTED SLIGHTLY TO AVOID WEEP HOLES, BACKWALL PLATE, ANCHOR BOLTS, AND OTHER BARS. FIELD BENDS ARE NOT PERMITTED, UNLESS NOTED OTHERWISE.

## STRUCTURE UNIT:

A – ABUTMENT STEM
B – BACKWALL
C – PIER COLUMN, PIER CAP, CULVERT, HAMMERHEAD PIER, CRASH WALL, PIER WALL, CLOSURE POUR
D – DECK SLAB, DIAPHRAGMS
F – FOOTING
H – HEADER, HEADWALL
M – MEDIAN SLAB
P – PARAPET, BARRIER CURB, PYLON
R – APPROACH SLAB
S – SIDEWALK, CURB
T – TOE WALL
W – WINGWALL, RETAINING WALL

BAR SIZE
STRUCTURE UNIT
BAR NUMBER
16 B 22
EXAMPLE: 16B22 = A SIZE 16 BAR, NUMBER 22, PLACED IN THE BACKWALL OF THE ABUTMENT.

## CORROSION PROTECTION:

E – EPOXY COATED
G – GALVANIZED
S – SOLID STAINLESS STEEL

| REVISION | BY | CKD. | DATE |
|---|---|---|---|
| | | | |
| | | | |
| | | | |

| MARK | TYPE | LENGTH FT. IN. | NO. OF UNITS | NO. OF BARS/ UNIT | TOTAL NO. OF BARS | CORR. PROT. | A FT. IN. | B FT. IN. | C FT. IN. | REMARKS D FT. IN. | E FT. IN. | F FT. IN. | G FT. IN. |
|---|---|---|---|---|---|---|---|---|---|---|---|---|---|
| 16D70 | STR | 13′-4″ TO 28′-4″ VAR. 1′-6″ | 1 | 11 | 11 | E | | | | | | | |
| 16D71 | STR | 33′-8″ TO 48′-8″ VAR. 1′-6″ | 1 | 11 | 11 | E | | | | | | | |
| 16D72 | STR | 15′-8″ TO 30′-8″ VAR. 1′-6″ | 1 | 11 | 11 | E | | | | | | | |
| 16D73 | STR | 36′-0″ TO 51′-0″ VAR. 1′-6″ | 1 | 11 | 11 | E | | | | | | | |
| 16D74 | STR | 18′-0″ TO 33′-0″ VAR. 1′-6″ | 1 | 11 | 11 | E | | | | | | | |
| 16D75 | STR | 15′-0″ | 2 | 7 | 14 | E | | | | | | | |
| 16D76 | STR | 41′-0″ | 3 | 72 | 216 | E | | | | | | | |
| 16D77 | CC | 7′-6 1/2″ | 10 | 11 | 110 | E | 6″ | 7 1/2″ | 2′-10 1/2″ | 1′-1″ | 3′-0″ | | |
| 16D78 | F | 3′-2 1/2″ | 10 | 11 | 110 | E | 1′-7 1/2″ | 1′-7″ | 1′-2 1/2″ | 1′-2″ | | | |
| 16D79 | STR | 9′-5″ | 5 | 3 | 15 | E | | | | | | | |
| 16D80 | STR | 16′-3″ | 5 | 3 | 15 | E | | | | | | | |
| 16D81 | STR | 29′-0″ | 4 | 3 | 12 | E | | | | | | | |
| 16D82 | STR | 32′-4″ | 6 | 3 | 18 | E | | | | | | | |
| 16D83 | A | 5′-2″ | 1 | 530 | 530 | E | 4′-7″ | 7″ | 5″ | | | | |
| 16D84 | L | 3′-10″ | 1 | 65 | 65 | E | 1′-0″ | 7″ | 10″ | 10″ | | | |
| 16D85 | L | 4′-0″ | 1 | 508 | 508 | E | 1′-2″ | 7″ | 10″ | 10″ | | | |
| 16D86 | L | 4′-2″ | 1 | 127 | 127 | E | 1′-4″ | 7″ | 10″ | 10″ | | | |
| 16D87 | S | 6′-0 1/2″ | 1 | 127 | 127 | E | 10″ | 6 1/2″ | 3′-3″ | (0 1/2″) | 7″ | | |
| 16D88 | S | 6′-6″ | 1 | 65 | 65 | E | 10″ | 7″ | 3′-9″ | (0 1/2″) | 6″ | | |
| 16D89 | STR | 34′-0″ | 1 | 22 | 22 | E | | | | | | | |
| 16D90 | F | 5′-9″ | 1 | 2 | 2 | E | 3′-9″ | 2′-0″ | 3′-9″ | | | | |
| 16D91 | Q | 6′-4 1/2″ | 1 | 2 | 2 | E | 2′-2 1/2″ | 2′-2″ | 2′-0″ | 1′-6 1/2″ | 1′-7″ | 1′-5″ | 1′-5 1/2″ |
| 16D92 | STR | 8′-0″ | 8 | 2 | 16 | E | | | | | | | |
| 16D93 | STR | 8′-6″ | 12 | 2 | 24 | E | | | | | | | |
| 19D50 | GG | 9′-3″ | 16 | 11 | 176 | E | 8″ | 3′-11 1/2″ | 3′-11 1/2″ | 3′-11 1/2″ | | | 3′-11 1/2″ |

**SIDEWALK**

| | | | | | | | | | | | | | |
|---|---|---|---|---|---|---|---|---|---|---|---|---|---|
| 13S50 | STR | 6′-6 1/2″ | 8 | 21 | 168 | E | | | | | | | |
| 13S51 | STR | 19′-4″ | 6 | 7 | 42 | E | | | | | | | |
| 13S52 | STR | 18′-6″ TO 22′-6″ VAR. 8″ | 1 | 7 | 7 | E | | | | | | | |
| 13S53 | STR | 2′-0″ TO 4′-4″ VAR. 1′-2″ | 1 | 3 | 3 | E | | | | | | | |
| 13S54 | STR | 17′-2″ TO 28′-8″ VAR. 1′-11″ | 1 | 7 | 7 | E | | | | | | | |
| 13S55 | STR | 1′-3 1/2″ TO 5′-1″ VAR. 6 1/2″ | 1 | 8 | 8 | E | | | | | | | |

| MARK | TYPE | LENGTH FT. IN. | NO. OF UNITS | NO. OF BARS/ UNIT | TOTAL NO. OF BARS | CORR. PROT. | A FT. IN. | B FT. IN. | C FT. IN. | REMARKS D FT. IN. | E FT. IN. | F FT. IN. | G FT. IN. |
|---|---|---|---|---|---|---|---|---|---|---|---|---|---|
| **PARAPET** | | | | | | | | | | | | | |
| 13P80 | STR | 9′-6″ | 28 | 4 | 112 | E | | | | | | | |
| 13P81 | G | 4′-11 1/2″ | 18 | 16 | 288 | E | 2′-6″ | 2′-5 1/2″ | 2′-5″ | 6″ | | | |
| 13P82 | STR | 14′-3″ | 18 | 4 | 72 | E | | | | | | | |
| 13P83 | STR | 9′-3″ | 4 | 4 | 16 | E | | | | | | | |
| 16P80 | L | 5′-2″ | 1 | 5 | 5 | E | 1′-0″ | 11″ | 1′-2″ | 1′-2″ | | | |
| 16P81 | X | 4′-11″ | 1 | 4 | 4 | E | 1′-0″ | 1′-0″ | 1′-0″ | 1′-0″ | 5 1/2″ | | |
| **CONSTRUCTION STAGE 2D** | | | | | | | | | | | | | |
| **WEST ABUTMENT – SIDEWALK** | | | | | | | | | | | | | |
| 13S01 | STR | 2′-4″ | 1 | 2 | 2 | E | | | | | | | |
| 13S02 | F | 7′-2 1/2″ | 1 | 2 | 2 | E | 6′-6 1/2″ | 8″ | 6′-6 1/2″ | 1 1/2″ | | | |
| 13S03 | STR | 1′-0″ | 1 | 8 | 8 | E | | | | | | | |
| **EAST ABUTMENT** | | | | | | | | | | | | | |
| **SIDEWALK** | | | | | | | | | | | | | |
| 13S10 | STR | 1′-0″ | 1 | 3 | 3 | E | | | | | | | |
| 13S11 | F | 6′-1″ | 1 | 2 | 2 | E | 5′-5″ | 8″ | 5′-5″ | | | | |
| 13S12 | STR | 1′-11 1/2″ | 1 | 3 | 3 | E | | | | | | | |
| 13S13 | STR | 2′-4″ | 1 | 2 | 2 | E | | | | | | | |
| 13S14 | F | 6′-5″ | 1 | 1 | 1 | E | 4′-0″ | 2′-5″ | 3′-6″ | 1′-11 1/2″ | | | |
| 13S15 | F | 6′-0″ | 1 | 1 | 1 | E | 3′-0″ | 3′-0″ | 2′-7 1/2″ | 1′-6″ | | | |
| **DECK – SIDEWALK** | | | | | | | | | | | | | |
| 13S20 | F | 6′-3″ | 1 | 390 | 390 | E | 5′-7 1/2″ | 7 1/2″ | 5′-7 1/2″ | 1 1/2″ | DOWEL BAR | | |
| 13S21 | STR | 2′-0″ | 1 | 399 | 399 | E | | | | THREAD ONE END | | | |
| 13S22 | STR | 19′-6″ | 17 | 7 | 119 | E | | | | | | | |
| 13S23 | STR | 16′-3″ TO 19′-7 1/2″ VAR. 7″ | 1 | 7 | 7 | E | | | | | | | |
| 13S24 | STR | 13′-4 1/2″ TO 23′-1 1/2″ VAR. 1′-7 1/2″ | 1 | 7 | 7 | E | | | | | | | |

A

B

C

F

G

L

O

S

U

V

X

CC

GG

## BAR TYPES

| CONTROL SECTION | | JOB NO. | |
|---|---|---|---|
| DES. BY | J. BOGNAR | CHK. BY | M. CHEN<br>Y. CHEN |
| DWN. BY | J. BOGNAR | | |
| EST. BY | C. MANJUNATH | CHK. BY | M. CHEN |
| SPECS. BY | B. KARALIUS | | |
| IN CHARGE OF | B. KARALIUS | | |

## NOTES:

1. ALL REINFORCEMENT BENDS SHALL CONFORM TO THE LATEST ACI REQUIREMENTS.
2. ANY DAMAGE TO CORROSION PROTECTION OF REINFORCEMENT BARS SHALL BE REPAIRED AS PER SPECIFICATIONS.
3. BAR LOCATIONS MAY BE SHIFTED SLIGHTLY TO AVOID WEEP HOLES, BACKWALL PLATE, ANCHOR BOLTS, AND OTHER BARS. FIELD BENDS ARE NOT PERMITTED, UNLESS NOTED OTHERWISE.

## STRUCTURE UNIT:

A – ABUTMENT STEM
B – BACKWALL
C – PIER COLUMN, PIER CAP, CULVERT, HAMMERHEAD PIER, CRASH WALL, PIER WALL, CLOSURE POUR
D – DECK SLAB, DIAPHRAGMS
F – FOOTING
H – HEADER, HEADWALL
M – MEDIAN SLAB
P – PARAPET, BARRIER CURB, PYLON
R – APPROACH SLAB
S – SIDEWALK, CURB
T – TOE WALL
W – WINGWALL, RETAINING WALL

BAR SIZE / STRUCTURE UNIT / BAR NUMBER
16 B 22
EXAMPLE: 16B22 = A SIZE 16 BAR, NUMBER 22, PLACED IN THE BACKWALL OF THE ABUTMENT.

## CORROSION PROTECTION:

E – EPOXY COATED
G – GALVANIZED
S – SOLID STAINLESS STEEL

| REVISION | BY | CKD. | DATE |
|---|---|---|---|
| | | | |
| | | | |
| | | | |

| STATE | FEDERAL PROJECT NO. | SHEET | TOTAL SHEETS |
|---|---|---|---|
| N.J. | FS-BR-0040 (168) | | |

STRUCTURE NO. 2004-164

ROUTE 22 OVER CONRAIL AND LIBERTY AVENUE (FORMERLY STR. NO. 2004-153)

NEW JERSEY DEPARTMENT OF TRANSPORTATION
BUREAU OF STRUCTURAL ENGINEERING

# BAR SCHEDULE – 8

ROUTE 22 LIBERTY AVENUE & CONRAIL BRIDGE
CONTRACT NO. 057009080

HILLSIDE TOWNSHIP MUNICIPALITY — UNION COUNTY

PB AMERICAS, INC.
CERTIFICATION OF AUTHORIZATION NO. 24GA28029800
BRUCE J. KARALIUS
NEW JERSEY PROFESSIONAL ENGINEER LICENSE NO. 26369

SCALE: AS SHOWN

BRIDGE SHEET NO. B73 of B128

180

PARSONS BRINCKERHOFF CADD DATA
OPERATOR marquema
PLOT DATE 01-DEC-2009 14:26
PENTABLE str-full.tbl
DESIGN FILE T:\00404\struc\Bridge\bs01_h.dgn

# ABBREVIATIONS

| | |
|---|---|
| AASHTO | AMERICAN ASSOCIATION OF STATE HIGHWAY AND TRANSPORTATION OFFICALS |
| ABUT. | ABUTMENT |
| ALIGN. | ALIGNMENT |
| ALT. W/ | ALTERNATE WITH |
| APPR. | APPROACH |
| APPROX. | APPROXIMATE |
| ASTM | AMERICAN SOCIETY FOR TESTING AND MATERIALS |
| AWS | AMERICAN WELDING SOCIETY |
| ℄ OR B/L | BASE LINE |
| B/C | BARRIER CURB |
| BAR. | BARRIER |
| BETW. | BETWEEN |
| BIT. CONC. | BITUMINOUS CONCRETE |
| BOT. OR B | BOTTOM |
| BRGS. | BEARINGS |
| ℄ OR C/L | CENTER LINE |
| C.L.F. | CHAIN-LINK FENCE |
| C.I.P. | CAST-IN-PLACE |
| C/C OR C. TO C. | CENTER TO CENTER |
| CLR. | CLEAR, CLEARANCE |
| COL. | COLUMN |
| CONC. | CONCRETE |
| CONN. ℄ (OR PL) | CONNECTION PLATE |
| CONSTR. | CONSTRUCTION |
| CONT. | CONTINUOUS, CONTINUED |
| CONTR. | CONTRACTION |
| COV. ℄ (OR PL) | COVER PLATE |
| CSP | CORRUGATED STEEL PIPE |
| CSUP | CORRUGATED STEEL UNDERDRAIN PIPE |
| CTR | CENTER |
| CAACP | CORRUGATED ALUMINUM ALLOY CULVERT PIPE |
| CAAUP | CORRUGATED ALUMINUM ALLOY UNDERDRAIN PIPE |
| DIA. (OR D) | DIAMETER |
| DIAPH. | DIAPHRAGM |
| E | EAST |
| E.F. | EACH FACE |
| E.O.P. | EDGE OF PAVEMENT |
| EA. | EACH |
| EB | EASTBOUND |
| EL. | ELEVATION |
| ELEC. | ELECTRIC, ELECTRICAL |
| EQ. | EQUALLY |
| EXIST. | EXISTING |
| EXP. OR E | EXPANSION |
| EXT. | EXTERIOR |
| FASC. | FASCIA |
| F.F. | FRONT FACE |
| F.O.C. | FIBER OPTIC CABLE |
| FDN. | FOUNDATION |
| FIN. | FINISH, FINISHED |
| FIX. OR F | FIXED |
| FT | FOOT |
| FTG. | FOOTING |
| G/L | GROUND LINE |
| G/R | GUIDE RAIL |
| GA. | GAUGE |
| GALV. | GALVANIZED |
| H.P. | HIGH POINT |
| HPC | HIGH PERFORMANCE CONCRETE |
| H.S. | HIGH STRENGTH |
| HORIZ. | HORIZONTAL |
| I.D. | INSIDE DIAMETER |
| IN | INCH |
| INCL. | INCLUDING |
| INT. | INTERIOR |
| INTERM. | INTERMEDIATE |
| INV. EL. | INVERT ELEVATION |
| JB | JUNCTION BOX |
| JT. | JOINT |
| K | KIP, KIPS |
| LBS. | POUNDS |
| LMC OVERLAY | LATEX MODIFIED CONCRETE OVERLAY |
| LONGIT. OR LONG. | LONGITUDINAL |
| LSB | LIGHTING STANDARD BOSS |
| LT. | LEFT |
| M.H.W. | MEAN HIGH WATER |
| MAX. | MAXIMUM |
| MED. | MEDIAN, MEDIUM |
| MIN. | MINIMUM |
| MISC. | MISCELLANEOUS |
| M.b.m. | 1000 BOARD MEASURE |
| MSE | MECHANICALLY STABILIZED EARTH |
| N | NORTH |
| N.F. | NEAR FACE |
| N.I.C. | NOT IN CONTRACT |
| N.T.S. | NOT TO SCALE |
| NB | NORTHBOUND |
| NE | NORTHEAST |
| NW | NORTHWEST |
| O.D. | OUTSIDE DIAMETER |
| OPP. | OPPOSITE |
| O. TO O. | OUT TO OUT |
| PVMT. | PAVEMENT |
| ℄ OR PL | PLATE |
| P.C. | POINT OF CURVATURE, PRESTRESSED CONCRETE |
| P.I. | POINT OF INTERSECTION |
| P.T. | POINT OF TANGENCY |
| P.V.C. | POINT OF VERTICAL CURVATURE |
| P.V.I. | POINT OF VERTICAL INTERSECTION |
| P.V.T. | POINT OF VERTICAL TANGENCY |
| PGL | PROFILE GRADE LINE |
| PROP. | PROPOSED |
| PSI | POUNDS PER SQUARE INCH |
| PVC | POLYVINYL CHLORIDE |
| QTY | QUANTITY |
| R | RADIUS |
| R.F. | REAR FACE |
| R.M.C. | RIGID METALLIC CONDUIT |
| R.N.M.C. | RIGID NON-METALLIC CONDUIT |
| RR | RAILROAD |
| R/C | REINFORCED CONCRETE |
| RDWY. | ROADWAY |
| REINF. | REINFORCED, REINFORCEMENT |
| REL. | RELOCATED |
| REQ'D | REQUIRED |
| RET. WALL | RETAINING WALL |
| REV. | REVISION |
| ROW | RIGHT OF WAY |
| RT. | RIGHT, ROUTE |
| S | SOUTH |
| S.I.P. | STAY-IN-PLACE |
| S.S. | STAINLESS STEEL |
| S/W OR SDWK. | SIDEWALK |
| SB | SOUTHBOUND |
| SE | SOUTHEAST |
| SH. B | SHEET BRIDGE |
| SHLDR. | SHOULDER |
| SIM. | SIMILAR |
| SPA. @ | SPACING CENTER TO CENTER |
| SPC | SEISMIC PERFORMANCE CATEGORY |
| SPEC. | SPECIFICATION |
| SQ. | SQUARE |
| STA. | STATION |
| STD. | STANDARD |
| STD. HEX. | STANDARD HEXAGONAL |
| STIFF. ℄ (OR PL) | STIFFENER PLATE |
| STL | STEEL |
| STRUCT. OR STR. | STRUCTURE |
| SUBSTR. | SUBSTRUCTURE |
| SUPERSTR. | SUPERSTRUCTURE |
| SW | SOUTHWEST |
| SYM. | SYMMETRY, SYMMETRICAL |
| T | TOP |
| T&B | TOP AND BOTTOM |
| TEMP. | TEMPORARY, TEMPERATURE |
| THK. | THICK, THICKNESS |
| TRANSV. | TRANSVERSE |
| TRK. | TRACK |
| TYP. | TYPICAL |
| UNO | UNLESS NOTED OTHERWISE |
| V.C. | VERTICAL CURVE |
| VAR. | VARIES |
| VAR. SPA. | VARIABLE SPACING |
| VERT. | VERTICAL |
| W | WEST |
| W/ | WITH |
| WB | WESTBOUND |
| WP | WORKING POINT NUMBER |
| WW | WINGWALL |
| WWF | WELDED WIRE FABRIC |
| YR. | YEAR |

# LEGEND

| | |
|---|---|
| — CTV — | *Cable TV (Exist.)* |
| — CTV — | CABLE TV (PROP.) |
| — DOT — | *DOT Electric Line (Exist.)* |
| — E — | *Electric Line (Exist.)* |
| — E — | ELECTRIC LINE (PROP.) |
| -E (OH)- | ELECTRIC LINE - OVERHEAD (PROP.) |
| ELEC MH | *Electric Manhole (Exist.)* |
| ELEC MH | ELECTRIC MANHOLE (PROP.) |
| E | EXPANSION BEARING |
| —x—x— | *Fence (Exist.)* |
| —x—x— | FENCE (PROP.) |
| F | FIXED BEARING |
| — F — | *Fiber Optic Cable (Exist.)* |
| — F — | FIBER OPTIC CABLE (PROP.) |
| — G — | *Gas Line (Exist.)* |
| — G — | GAS LINE (PROP.) |
| Guy | *Guy Wire (Exist.)* |
| | *Inlet (Exist.)* |
| | INLET (PROP.) |
| | *Junction Box (Exist.)* |
| | JUNCTION BOX (PROP.) |
| | *Sanitary Sewer Line (Exist.)* |
| | SANITARY SEWER LINE (PROP.) |
| | *Scupper (Exist.)* |
| | SCUPPER (PROP.) |
| | *Street Light (Exist.)* |
| | STREET LIGHT (PROP.) |
| — T — | *Telephone Line (Exist.)* |
| — T — | TELEPHONE LINE (PROP.) |
| -T (OH)- | TELEPHONE LINE - OVERHEAD (PROP.) |
| | *Manhole (Exist.)* |
| | MANHOLE (PROP.) |
| | *Utility Pole (Exist.)* |
| | UTILITY POLE (PROP.) |
| — W — | *Water Line (Exist.)* |
| — W — | WATER LINE (PROP.) |
| W | *Water Valve (Exist.)* |

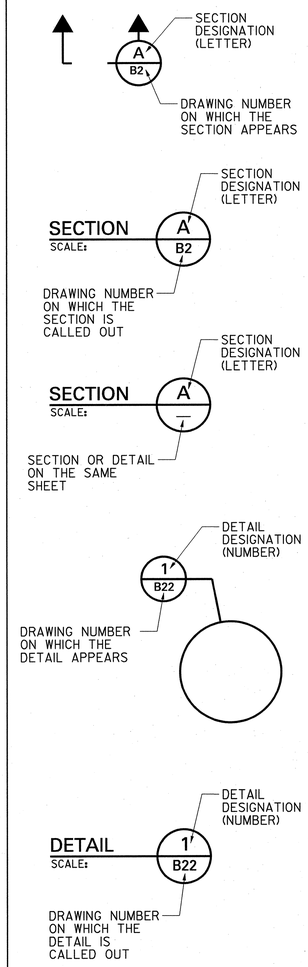


| STATE | FEDERAL PROJECT NO. | SHEET | TOTAL SHEETS |
|---|---|---|---|
| N.J. | FS-BR-0040 (168) | | |

STRUCTURE NO. 2004-163

ROUTE 22 OVER ACCESS ROAD
(FORMERLY STR. NO. 2004-153)

## INDEX OF DRAWINGS



| SHEET NUMBER | DRAWING TITLE |
|---|---|
| B74 | INDEX OF DRAWINGS, ABBREVIATIONS AND LEGEND |
| B75 | SUMMARY OF QUANTITIES AND WORKING POINT LAYOUT PLAN |
| B76 | GENERAL PLAN AND ELEVATION |
| B77 | TYPICAL SECTIONS AND PROFILES |
| B78 | CONSTRUCTION STAGING |
| B79 | STAGE LINE EMBANKMENT SUPPORT SYSTEM AT WEST ABUTMENT |
| B80 | ABUTMENT FOOTING PLANS |
| B81 | WEST ABUTMENT PLAN AND ELEVATION |
| B82 | WEST ABUTMENT SECTIONS |
| B83 | EAST ABUTMENT PLAN AND ELEVATION |
| B84 | EAST ABUTMENT SECTIONS |
| B85 | ABUTMENT SECTIONS AND DETAILS |
| B86 | MISCELLANEOUS SUBSTRUCTURE DETAILS |
| B87 | ELASTOMERIC BEARINGS |
| B88 | FRAMING PLAN |
| B89 | STRINGER DETAILS |
| B90 | STEEL DIAPHRAGM AND UTILITY SUPPORT DETAILS |
| B91 | DECK JOINT PLAN |
| B92 | DECK JOINT SECTIONS AND DETAILS |
| B93 | EASTBOUND DECK SLAB PLAN |
| B94 | WESTBOUND DECK SLAB PLAN |
| B95 | TYPICAL DECK SLAB SECTIONS |
| B96 | DECK SLAB DETAILS - 1 |
| B97 | DECK SLAB DETAILS - 2 |
| B98 | TOP OF DECK ELEVATIONS |
| B99 | BAR SCHEDULE - 1 |
| B100 | BAR SCHEDULE - 2 |
| B101 | BAR SCHEDULE - 3 |



**NOTE:**

FOR DEMOLITION PLANS, SEE STRUCTURE NO. 2004-164, ROUTE 22 OVER CONRAIL AND LIBERTY AVENUE.

PARSONS BRINCKERHOFF CADD DATA
OPERATOR marjema
PLOT DATE 01-DEC-2009 14:57
PENTABLE str-full.tbl
DESIGN FILE T:\00404\struc\Bridge-2\in02.dgn

| CONTROL SECTION | | JOB NO. | |
|---|---|---|---|
| DES. BY | M. CHEN | CHK. BY | L. LAU |
| DWN. BY | J. BOGNAR | | |
| EST. BY | C. MANJUNATH | CHK. BY | M. CHEN |
| SPECS. BY | B. KARALIUS | | |
| IN CHARGE OF | B. KARALIUS | | |

| REVISION | BY | CKD. | DATE |
|---|---|---|---|
| | | | |

NEW JERSEY DEPARTMENT OF TRANSPORTATION
BUREAU OF STRUCTURAL ENGINEERING

# INDEX OF DRAWINGS, ABBREVIATIONS AND LEGEND

ROUTE 22 LIBERTY AVENUE & CONRAIL BRIDGE
CONTRACT NO. 057009080

HILLSIDE TOWNSHIP MUNICIPALITY — UNION COUNTY

PB AMERICAS, INC.
CERTIFICATION OF AUTHORIZATION NO. 24GA28029800
BRUCE J. KARALIUS
NEW JERSEY PROFESSIONAL ENGINEER LICENSE NO. 26369

SCALE: AS SHOWN

BRIDGE SHEET NO. B74 of B128

181

| STATE | FEDERAL PROJECT NO. | SHEET | TOTAL SHEETS |
|---|---|---|---|
| N.J. | FS-BR-0040 (168) | | |

STRUCTURE NO. 2004-163

ROUTE 22 OVER ACCESS ROAD
(FORMERLY STR. NO. 2004-153)

## SUMMARY OF QUANTITIES

| ITEM NO. | DESCRIPTION | UNIT | CONTRACT QUANTITY |
|---|---|---|---|
| 201039P | TEMPORARY SHIELDING | LS | LUMP SUM |
| 501003P | TEMPORARY SHEETING | SF | 331 |
| 501018P | STAGE LINE EMBANKMENT SUPPORT SYSTEM | SF | 901 |
| 504003P | REINFORCEMENT STEEL | LB | 12700 |
| 504006P | REINFORCEMENT STEEL, EPOXY COATED | LB | 117000 |
| 504015P | CONCRETE FOOTING | CY | 112 |
| 504024P | CONCRETE ABUTMENT WALL | CY | 160 |
| 504036P | EPOXY WATERPROOFING | SY | 80 |
| 506003P | STRUCTURAL STEEL | LS | LUMP SUM |
| 506006P | REINFORCED ELASTOMERIC BEARING ASSEMBLY | UNIT | 24 |
| 506012P | SHEAR CONNECTOR | UNIT | 2900 |
| 507015P | STRIP SEAL EXPANSION JOINT ASSEMBLY | LF | 200 |
| 507024P | CONCRETE BRIDGE DECK, HPC | CY | 206 |
| 507027M | DATE PANEL | UNIT | 1 |
| 507033P | CONCRETE BRIDGE SIDEWALK, HPC | CY | 22 |
| 507039P | CONCRETE BRIDGE PARAPET, HPC | LF | 140 |
| 507045P | 15" BY 32" CONCRETE BARRIER CURB, BRIDGE, HPC | LF | 134 |
| 507051P | CONCRETE BRIDGE APPROACH | CY | 420 |
| 509084P | CHAIN-LINK FENCE, PVC-COATED STEEL, BRIDGE, 6'-3" HIGH CURVED TOP | LF | 140 |
| 701015P | 2" RIGID METALLIC CONDUIT | LF | 331 |
| 701021P | 3" RIGID METALLIC CONDUIT | LF | 77 |
| 701120M | JUNCTION BOX FRAME & COVER | UNIT | 4 |
| | | | |
| | | | |
| | | | |
| | | | |
| | | | |

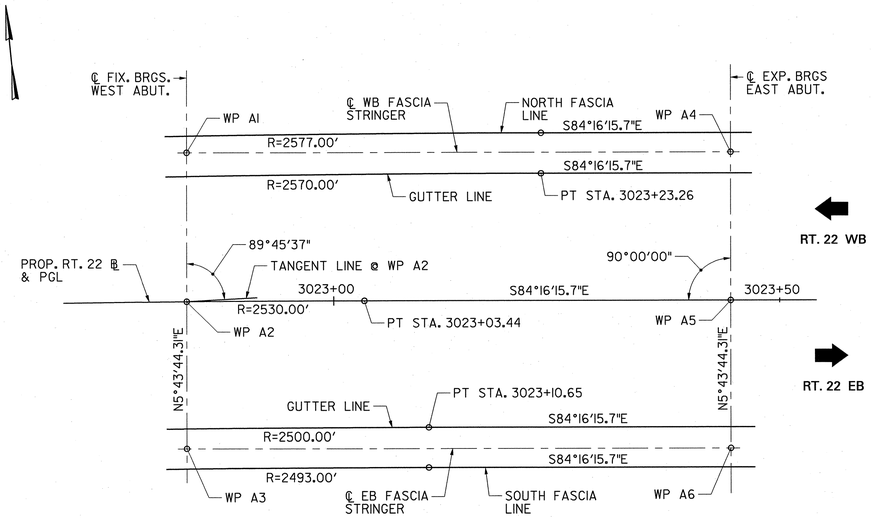


PLAN
N.T.S.

NOTE:
FOR THE ALIGNMENT & GUTTER LINE CURVATURE DETAILS, SEE HIGHWAY CONSTRUCTION PLANS.

## WORKING POINT INFORMATION

| WORKING POINT | STATION ON RT. 22 ℄ | OFFSET FROM RT. 22 ℄ | COORDINATES | |
|---|---|---|---|---|
| | | | NORTH | EAST |
| WP A1 | 3022+83.87 | 45.69' | 679810.73 | 566227.79 |
| WP A2 | 3022+83.52 | 0 | 679765.26 | 566223.23 |
| WP A3 | 3022+83.15 | 45.53' | 679719.95 | 566218.68 |
| WP A4 | 3023+44.52 | 45.61' | 679804.64 | 566288.49 |
| WP A5 | 3023+44.52 | 0 | 679759.25 | 566283.93 |
| WP A6 | 3023+44.52 | 45.61' | 679713.87 | 566279.38 |

PARSONS BRINCKERHOFF CADD DATA

| | |
|---|---|
| OPERATOR | marquema |
| PLOT DATE | 01-DEC-2009 14:57 |
| PENTABLE | str-full.tbl |
| DESIGN FILE | T:\00404\struc\Bridge 2\sag02.dgn |

| CONTROL SECTION | | JOB NO. | |
|---|---|---|---|
| DES. BY | M. CHEN | CHK. BY | L. LAU |
| DWN. BY | J. BOGNAR | | |
| EST. BY | C. MANJUNATH | CHK. BY | M. CHEN |
| SPECS. BY | B. KARALIUS | | |
| IN CHARGE OF | B. KARALIUS | | |

| REVISION | BY | CKD. | DATE |
|---|---|---|---|
| | | | |
| | | | |
| | | | |
| | | | |

NEW JERSEY DEPARTMENT OF TRANSPORTATION
BUREAU OF STRUCTURAL ENGINEERING

# SUMMARY OF QUANTITIES AND WORKING POINT LAYOUT PLAN

ROUTE 22 LIBERTY AVENUE & CONRAIL BRIDGE
CONTRACT NO. 057009080

HILLSIDE TOWNSHIP
MUNICIPALITY

UNION
COUNTY

PB AMERICAS, INC.
CERTIFICATION OF AUTHORIZATION NO. 24GA28029800

BRUCE J. KARALIUS
NEW JERSEY PROFESSIONAL ENGINEER LICENSE NO. 26369

SCALE: AS SHOWN

BRIDGE SHEET NO. B75 of B128

182

| STATE | FEDERAL PROJECT NO. | SHEET | TOTAL SHEETS |
|---|---|---|---|
| N.J. | FS-BR-0040 (168) | | |

STRUCTURE NO. 2004-163

ROUTE 22 OVER ACCESS ROAD
(FORMERLY STR. NO. 2004-153)

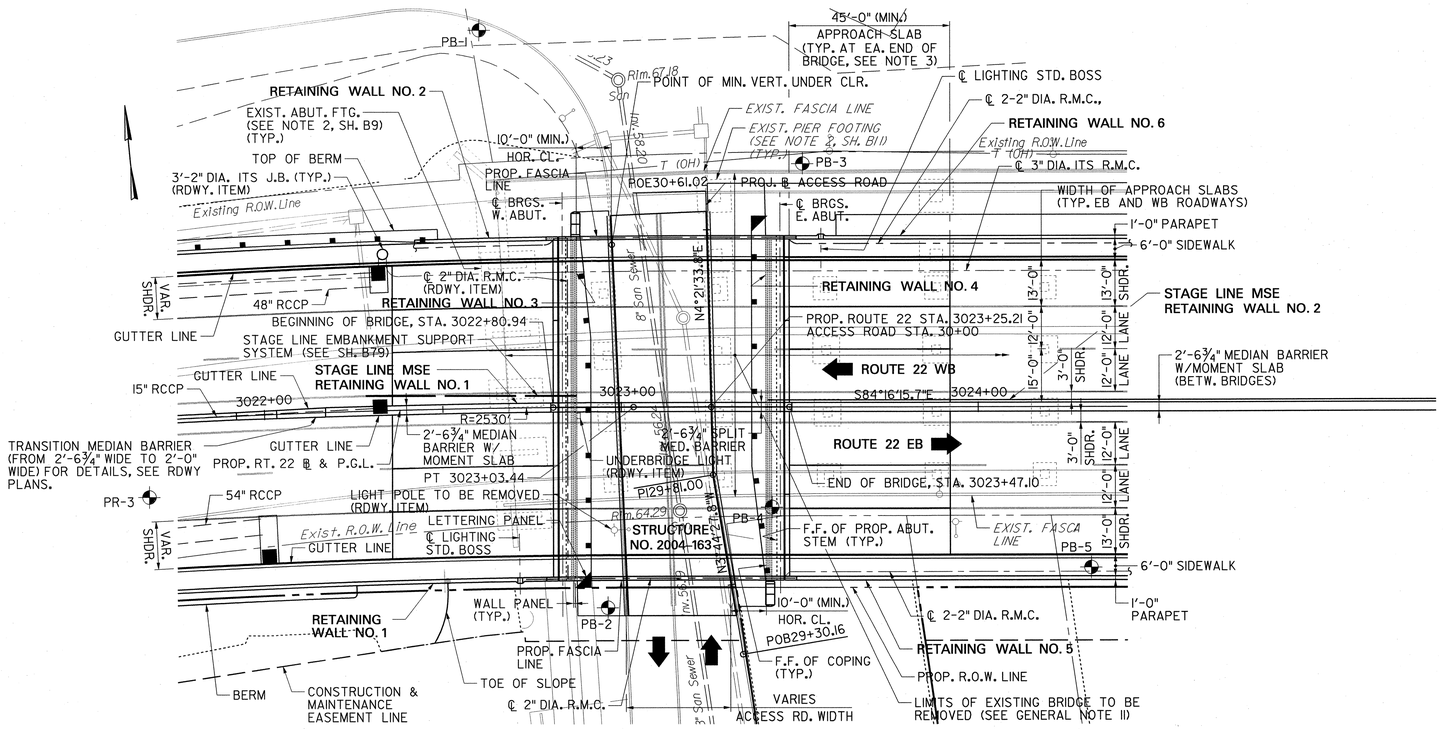


## PLAN
1" = 20'

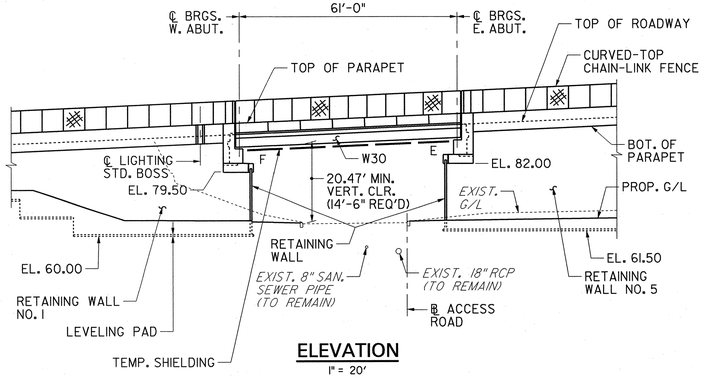


## ELEVATION
1" = 20'

**NOTES:**

1. FOR ALL EXISTING AND PROPOSED UTILITIES REFER TO THE UTILITY PLANS.
2. STAGE LINE MSE RETAINING WALLS NOS. 1 AND 2 ARE TEMPORARY WALLS TO BE LEFT IN PLACE. THEY ARE REQUIRED TO RETAIN THE EMBANKMENT FOR THE EASTBOUND ROADWAY WHILE THE WESTBOUND ROADWAY FOR STAGE 2 IS BEING CONSTRUCTED.
3. APPROACH SLABS ARE REQUIRED THE FULL WIDTH OF THE ROADWAY AT EACH END OF THE EASTBOUND AND WESTBOUND ROADWAYS. FOR DETAILS SEE BRIDGE CONSTRUCTION DETAIL SHEET BCD-507-5. CONSTRUCTION JOINTS ARE TO BE LOCATED AS SHOWN.

APPROACH SLAB QUANTITIES

**QUANTITIES**

| ITEM NO. | DESCRIPTION | UNIT | CONTRACT QUANTITIES | |
|---|---|---|---|---|
| | | | STAGE 1B | STAGE 2B |
| 504006P | REINFORCEMENT STEEL, EPOXY COATED | LB | 32400 | 32400 |
| 507051P | CONCRETE BRIDGE APPROACH | CY | 210 | 210 |
| | | | | |
| | | | | |

1" = 20'

20' 10' 0 20' 40'

## GENERAL NOTES:

1. **DESIGN SPECIFICATIONS:**

   2007 (4th EDITION) AASHTO LRFD BRIDGE DESIGN SPECIFICATIONS, WITH CURRENT ERRATA, AS MODIFIED BY SECTION 3 OF NJDOT DESIGN MANUAL FOR BRIDGES AND STRUCTURES.

   ABUTMENTS WERE DESIGNED IN ACCORDANCE WITH 2002 (17TH ADDITION) OF AASHTO STANDARD SPECIFICATIONS FOR HIGHWAY BRIDGES.

2. **CONSTRUCTION SPECIFICATIONS:**

   2007 NJDOT STANDARD SPECIFICATIONS FOR ROAD AND BRIDGE CONSTRUCTION AS AMENDED BY THE SPECIAL PROVISIONS.

3. **LIVE LOAD:**

   AASHTO LRFD HL-93 VEHICULAR LIVE LOADING OR THE NJDOT PERMIT VEHICLE, WHICHEVER GOVERNS.

4. **CONCRETE COMPRESSIVE STRESSES:**

   (A) DESIGN COMPRESSIVE STRENGTH (f'c):
   CLASS A = 4,000 PSI
   CLASS B = 3,000 PSI
   CLASS HPC = 4,000 PSI

   (B) CLASS MIX DESIGN STRENGTHS:
   (IN ACCORDANCE WITH TABLE 914-3 OF THE NJDOT STANDARD SPECIFICATIONS)
   CLASS A = 4,600 PSI
   CLASS B = 3,700 PSI

5. **REINFORCEMENT STEEL:**

   ASTM A615 (GRADE 60)

6. **SUPERSTRUCTURE:**

   (A) DEAD LOAD INCLUDES THE WEIGHT OF STAY-IN-PLACE FORMS WITH 3/8" ADDITIONAL CONCRETE THICKNESS, AND INCLUDES A 25 PSF PROVISION FOR A FUTURE 2" THICK CONCRETE OVERLAY PROTECTIVE SYSTEM ON THE BRIDGE DECK.

   (B) STRUCTURAL STEEL:
   STRINGERS, DIAPHRAGMS, BEARINGS:
   AASHTO M270, GRADE 50W (ASTM A 709, GRADE 50W).
   ALL MEMBER COMPONENTS MARKED (T) SHALL COMPLY WITH SUPPLEMENTARY REQUIREMENTS FOR NOTCH TOUGHNESS.

   DECK JOINTS:
   AASHTO M270 GRADE 36 (GALVANIZED)

   (C) CLASS HPC CONCRETE
   BRIDGE DECK, MEDIAN BARRIER CURBS, PARAPETS AND SIDEWALKS

   (D) PERMANENT STEEL BRIDGE DECK FORMS AND ACCESSORIES:
   ASTM A653, GRADES 33, 37, 40, 49, OR 50. GALVANIZING SHALL CONFORM TO ASTM A653M, COATING DESIGNATION G235 OR Z700.

   (E) CLASS A CONCRETE: APPROACH SLABS

7. **SUBSTRUCTURE:**

   (A) CLASS B CONCRETE:
   ABUTMENTS, WALLS AND FOOTINGS.

8. **SEISMIC DESIGN NOTES:**

   SEISMIC PERFORMANCE ZONE 2
   ACCELERATION COEFFICIENT (A) = 0.18
   SOIL PROFILE - TYPE I

9. **BORINGS:**

   ⊕ INDICATES LOCATION OF 2005 BORINGS
   LOG. NO.

10. **FOUNDATION DESIGN CRITERIA:**

    (A) SPREAD FOOTINGS:
    BEARING PRESSURE UNDER STUB ABUTMENT = 4.0 KSF
    PROPRIETARY WALL TO BE DESIGNED ACCORDINGLY.

11. **DEMOLITION PLANS:**

    FOR DEMOLITION PLANS SEE PLANS FOR STRUCTURE NO. 2004-164, ROUTE 22 OVER CONRAIL AND LIBERTY AVENUE.

| CONTROL SECTION | | | JOB NO. | |
|---|---|---|---|---|
| DES. BY | M. CHEN | CHK. BY | L. LAU | |
| DWN. BY | J. BOGNAR | | | |
| EST. BY | C. MANJUNATH | CHK. BY | M. CHEN | |
| SPECS. BY | B. KARALIUS | | | |
| IN CHARGE OF | B. KARALIUS | | | |

PARSONS BRINCKERHOFF CADD DATA
OPERATOR marquema
PLOT DATE 01-DEC-2009 14:57
PENTABLE str-full.tbl
DESIGN FILE T:\100404\struc\Bridge_2\gp02.dgn

NEW JERSEY DEPARTMENT OF TRANSPORTATION
BUREAU OF STRUCTURAL ENGINEERING

# GENERAL PLAN AND ELEVATION

ROUTE 22 LIBERTY AVENUE & CONRAIL BRIDGE
CONTRACT NO. 057009080

HILLSIDE TOWNSHIP MUNICIPALITY — UNION COUNTY

| REVISION | BY | CKD. | DATE |
|---|---|---|---|
| | | | |
| | | | |
| | | | |

PB AMERICAS, INC.
CERTIFICATION OF AUTHORIZATION NO. 24GA28029800

BRUCE J. KARALIUS
NEW JERSEY PROFESSIONAL ENGINEER LICENSE NO. 26369

SCALE: AS SHOWN

BRIDGE SHEET NO. B76 of B128

183

| STATE | FEDERAL PROJECT NO. | SHEET | TOTAL SHEETS |
|---|---|---|---|
| N.J. | FS-BR-0040 (168) | | |

STRUCTURE NO. 2004-163

ROUTE 22 OVER ACCESS ROAD
(FORMERLY STR. NO. 2004-153)

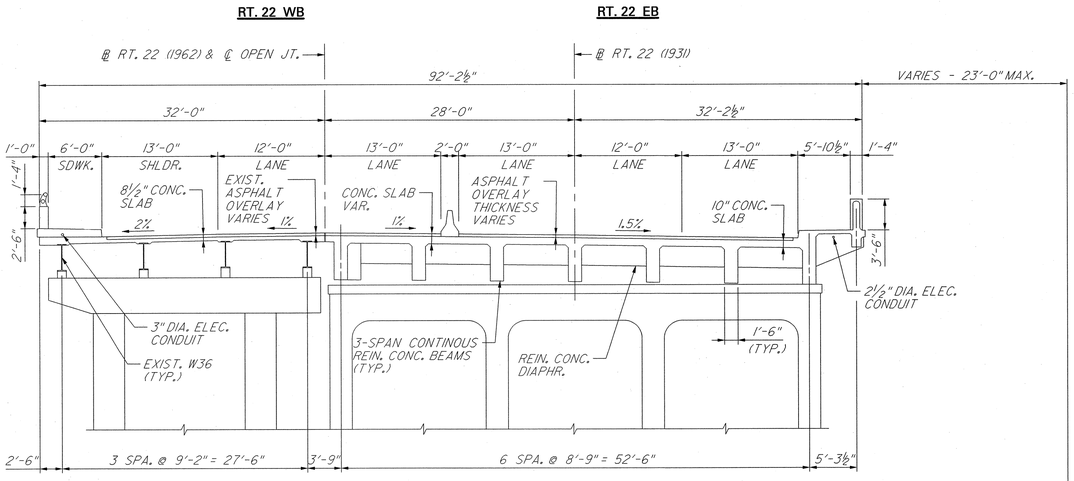


## TYPICAL SECTION – EXISTING

(LOOKING EAST)
⅛" = 1'-0"

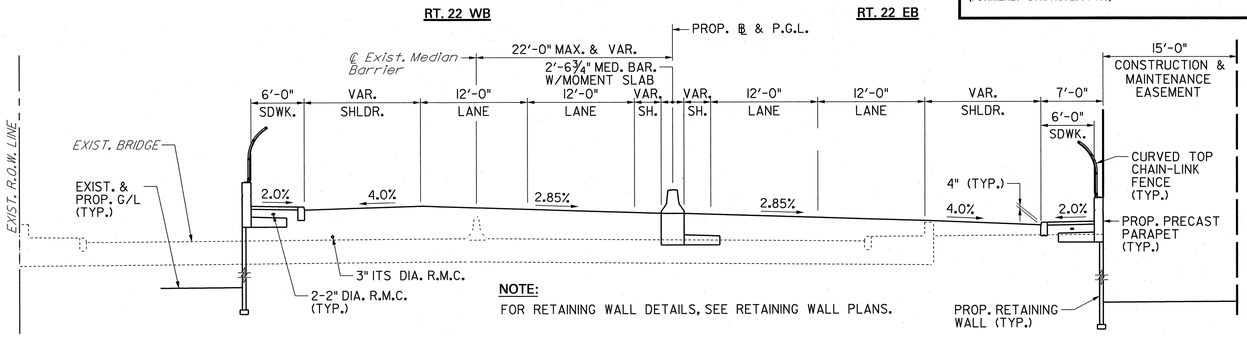


**NOTE:**
FOR RETAINING WALL DETAILS, SEE RETAINING WALL PLANS.

## TYPICAL SECTION – EXISTING AND PROPOSED EAST AND WEST APPROACHES

(LOOKING EAST)
⅛" = 1'-0"

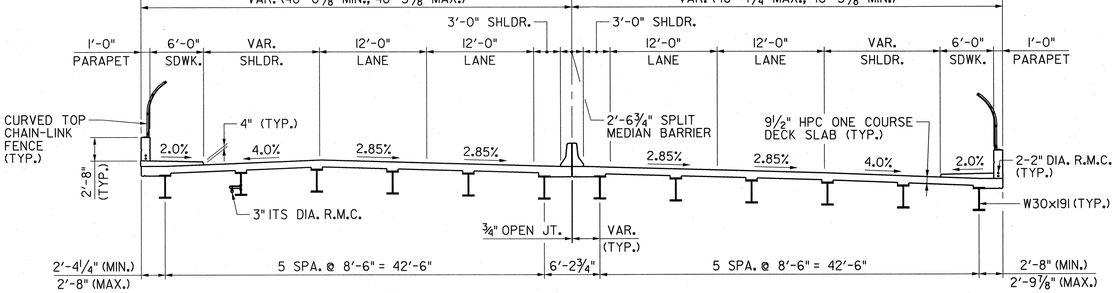


## TYPICAL SECTION – PROPOSED

(LOOKING EAST)
⅛" = 1'-0"

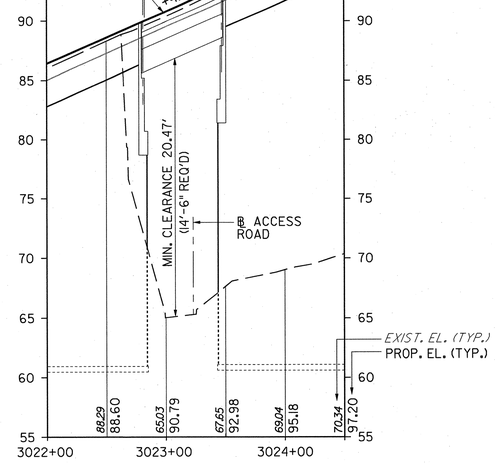


## PROFILE ROUTE – 22

HORZ. 1" = 60'
VERT. 1" = 6'

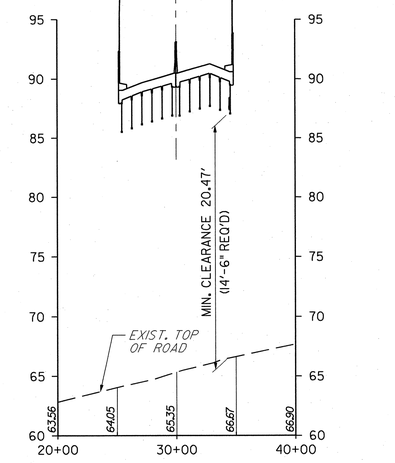


## PROFILE – ACCESS ROAD AT BASELINE

HORZ. 1" = 60'
VERT. 1" = 6'

| CONTROL SECTION | | JOB NO. | |
|---|---|---|---|
| DES. BY | M. CHEN | CHK. BY | L. LAU |
| DWN. BY | J. BOGNAR | | |
| EST. BY | C. MANJUNATH | CHK. BY | M. CHEN |
| SPECS. BY | B. KARALIUS | | |
| IN CHARGE OF | B. KARALIUS | | |

PARSONS BRINCKERHOFF CADD DATA
OPERATOR marquema
PLOT DATE 01-DEC-2009 14:57
PENTABLE str-full.tbl
DESIGN FILE T:\NJ0404\struc\Bridge_2\ts02.dgn

⅛" = 1'-0"
1" = 6'
1" = 60'

| REVISION | BY | CKD. | DATE |
|---|---|---|---|
| | | | |

NEW JERSEY DEPARTMENT OF TRANSPORTATION
BUREAU OF STRUCTURAL ENGINEERING

# TYPICAL SECTIONS AND PROFILES

ROUTE 22 LIBERTY AVENUE & CONRAIL BRIDGE
CONTRACT NO. 057009080

HILLSIDE TOWNSHIP
MUNICIPALITY

UNION
COUNTY

PB AMERICAS, INC.
CERTIFICATION OF AUTHORIZATION NO. 24GA28029800

BRUCE J. KARALIUS
NEW JERSEY PROFESSIONAL ENGINEER LICENSE NO. 26369

SCALE: AS SHOWN

BRIDGE SHEET NO. B77 of B128

184

| STATE | FEDERAL PROJECT NO. | SHEET | TOTAL SHEETS |
|---|---|---|---|
| N.J. | FS-BR-0040 (168) | | |

STRUCTURE NO. 2004-163

ROUTE 22 OVER ACCESS ROAD
(FORMERLY STR. NO. 2004-153)

**NOTES:**

1. TEMPORARY SHIELDING IS REQUIRED FOR REMOVAL OF THE EXISTING AND CONSTRUCTION OF THE NEW SUPERSTRUCTURE. TEMPORARY SHIELDING IS REQUIRED ONLY IN THE SPAN OVER THE ACCESS ROAD.
2. SOUTH SIDEWALK AND SOUTH CHAIN-LINK FENCE TO BE CONSTRUCTED IN STAGE 2D.
3. THE TYPICAL EXISTING SECTION OCCURS WEST OF LIBERTY AVENUE. FOR TYPICAL SECTIONS EAST OF LIBERTY AVENUE, SEE EXISTING BRIDGE DRAWINGS.

**INSTALLATION OF TEMPORARY CONSTRUCTION BARRIER:**

A. WHERE THE CONTRACTOR IS REQUIRED TO ANCHOR THE TEMPORARY CONSTRUCTION BARRIER INTO THE PROPOSED DECK SLAB, PRECAUTIONS ARE TO BE TAKEN TO ENSURE THAT TRANSVERSE REINFORCEMENT IN THE DECK SLAB IS NOT CUT OR DAMAGED. THE CONTRACTOR SHALL SUBMIT HIS PROPOSED METHOD OF CORING AND ANCHORING, ALONG WITH ANY REQUIRED SKETCHES REQUESTED BY THE ENGINEER, TO THE ENGINEER, FOR APPROVAL, PRIOR TO THE PROCUREMENT OF ANY DECK-RELATED MATERIALS, INCLUDING THE S-I-P FORM.

B. THE REQUIREMENTS ON THE ROADWAY CONSTRUCTION DETAILS, SHS. CD-159-4 AND CD-159-5 FOR A TYPE 4 BARRIER, FOR INSTALLATION AND REMOVAL OF THE ANCHORS AND FOR MAKING AND FILLING OF HOLES, ARE TO BE ADHERED TO. HOLES ARE TO BE MADE BY CORING; DRILLING WILL NOT BE PERMITTED.

C. ALL COSTS FOR MATERIAL AND LABOR, RELATED TO THE INSTALLATION AND REMOVAL OF THE TEMPORARY CONSTRUCTION BARRIER, INCLUDING ANY INCIDENTAL WORK, SUCH AS PATCHING, IS TO BE INCLUDED IN THE COST OF THE ROADWAY ITEM "CONSTRUCTION BARRIER CURB".

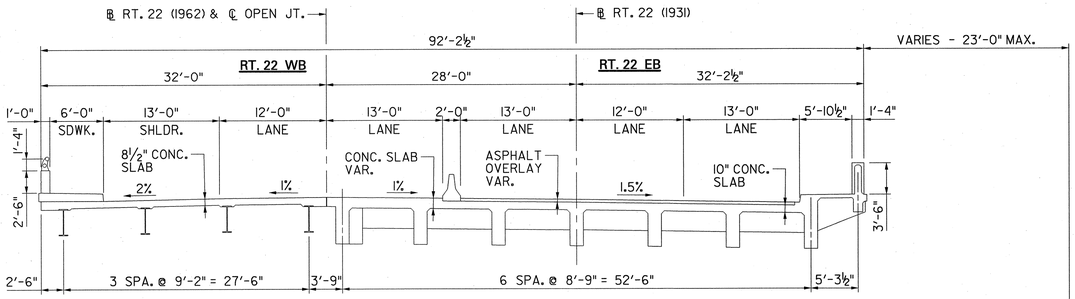


## TYPICAL SECTION – EXISTING (SEE NOTE 3)

(LOOKING EAST)
⅛" = 1'-0"

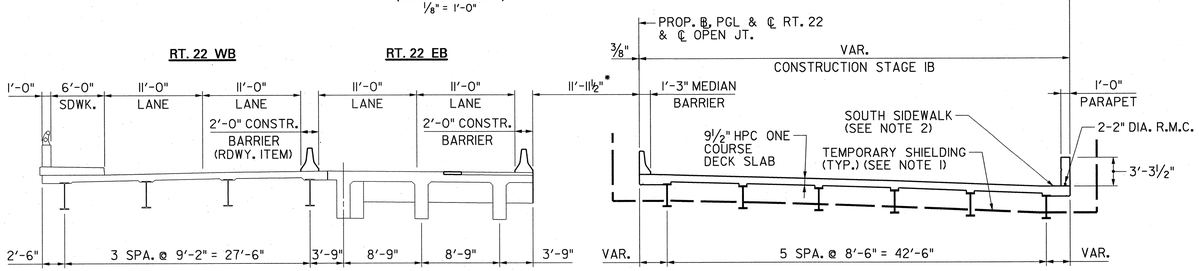


## STAGE 1B

(LOOKING EAST)
⅛" = 1'-0"

* AT EAST END OF BRIDGE; VARIES AT WEST END

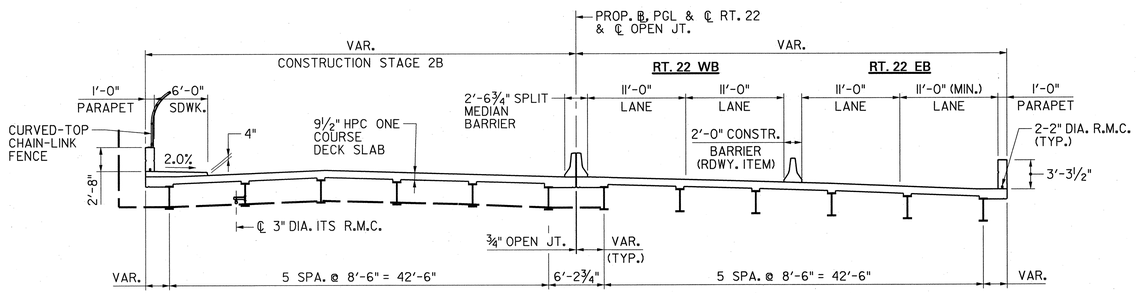


## STAGE 2B

(LOOKING EAST)
⅛" = 1'-0"

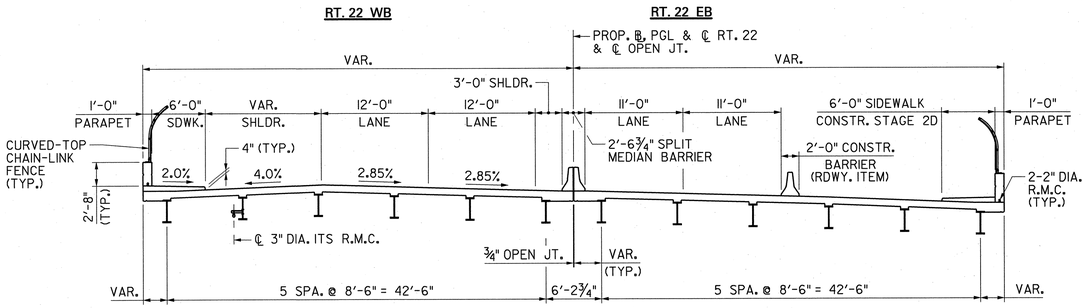


## STAGE 2D

(LOOKING EAST)
⅛" = 1'-0"

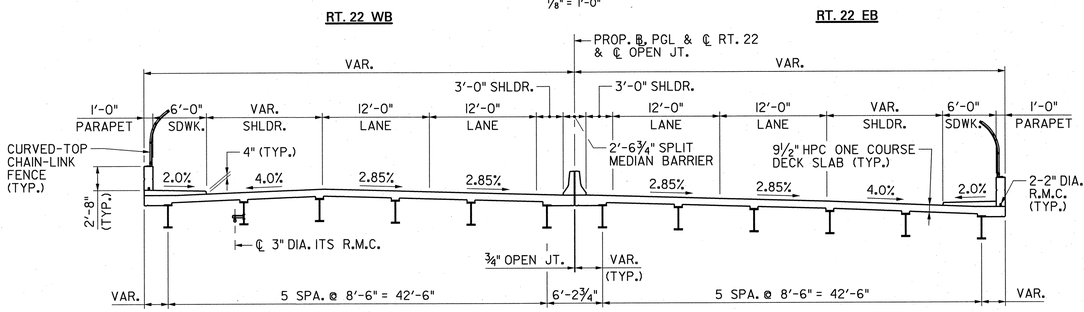


## TYPICAL SECTION – PROPOSED

(LOOKING EAST)
⅛" = 1'-0"

PARSONS BRINCKERHOFF CADD DATA
OPERATOR marquema
PLOT DATE 01-DEC-2009 14:57
PENTABLE str-full.tbl
DESIGN FILE T:\100404\struc\Bridge_2\cs02.dgn

| CONTROL SECTION | | | JOB NO. |
|---|---|---|---|
| DES. BY | M. CHEN | CHK. BY | L. LAU |
| DWN. BY | J. BOGNAR | | |
| EST. BY | C. MANJUNATH | CHK. BY | M. CHEN |
| SPECS. BY | B. KARALIUS | | |
| IN CHARGE OF | B. KARALIUS | | |

| REVISION | BY | CKD. | DATE |
|---|---|---|---|
| | | | |

1/8" = 1'-0"
1'0 2' 4' 8' 16'

NEW JERSEY DEPARTMENT OF TRANSPORTATION
BUREAU OF STRUCTURAL ENGINEERING

# CONSTRUCTION STAGING

ROUTE 22 LIBERTY AVENUE & CONRAIL BRIDGE
CONTRACT NO. 057009080

HILLSIDE TOWNSHIP
MUNICIPALITY

UNION
COUNTY

PB AMERICAS, INC.
CERTIFICATION OF AUTHORIZATION NO. 24GA28029800

BRUCE J. KARALIUS
NEW JERSEY PROFESSIONAL ENGINEER LICENSE NO. 26369

SCALE: AS SHOWN

BRIDGE SHEET NO. B78 of B128

185

| STATE | FEDERAL PROJECT NO. | SHEET | TOTAL SHEETS |
|---|---|---|---|
| N.J. | FS-BR-0040 (168) | | |

STRUCTURE NO. 2004-163

ROUTE 22 OVER ACCESS ROAD
(FORMERLY STR. NO. 2004-153)

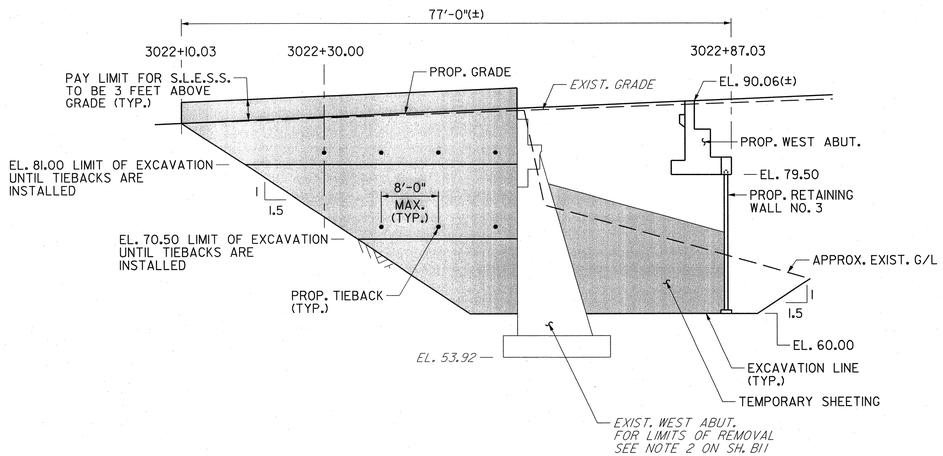


## ELEVATION – STAGE LINE EMBANKMENT SUPPORT SYSTEM AND TEMPORARY SHEETING BETWEEN CONSTRUCTION STAGES 1B AND 2B

(TO BE CONSTRUCTED IN STAGE 1B)

1" = 10'

**LEGEND:**

S.L.E.S.S. - STAGE LINE EMBANKMENT SUPPORT SYSTEM

PAY LIMITS OF TEMPORARY SHEETING AND S.L.E.S.S.

**NOTES:**

1. THE CONTRACTOR IS RESPONSIBLE FOR THE DESIGN OF THE STAGE LINE EMBANKMENT SUPPORT SYSTEM AND TIEBACKS.
2. DESIGN OF THE STAGE LINE EMBANKMENT SUPPORT SYSTEM SHALL BE ACCORDING TO THE REQUIREMENTS OF THE SPECIAL PROVISIONS. DIMENSIONS SHOWN ON THIS SHEET PROVIDE MINIMUM REQUIREMENTS WHICH CAN BE USED AS A GUIDE FOR THE CONTRACTOR FOR USE IN HIS BIDDING ESTIMATES.
3. EXCAVATION IN FRONT OF THE STAGE LINE EMBANKMENT SUPPORT SYSTEM AND SHEETING SHALL SATISFY OSHA REQUIREMENTS BUT IN NO CASE SHALL THE EXCAVATION SLOPE EXCEED 1.5(H): 1(V) IN ANY DIRECTION.
4. SOLDER PILE AND LAGGING CAN BE USED INSTEAD OF SHEETING. FOR SYSTEM ACTUALLY USED, A DESIGN SHALL BE SUBMITTED BY THE CONTRACTOR FOR APPROVAL BY THE ENGINEER. DESIGN SHALL BE PERFORMED BY A PROFESSIONAL ENGINEER LICENSED IN THE STATE OF NEW JERSEY.
5. THE LAGGING, IF THE CONTRACTOR CHOOSES TO LEAVE THE SHEETING IN PLACE, MUST BE DURABLE TO LAST THE LIFETIME OF THE STRUCTURE WITHOUT DETERIORATION.
6. INSTALLATION OF THE SHEETING OR SOLDIER FILE AND LAGGING SHALL BE SUCH AS NOT TO CAUSE VIBRATION LEVELS DAMAGING TO NEIGHBORING STRUCTURES AND MACHINERY. VIBRATION MONITORING SHALL BE PERFORMED ACCORDING TO THE SPECIAL PROVISIONS.

### QUANTITIES

| ITEM NO. | DESCRIPTION | UNIT | CONTRACT QUANTITIES |
|---|---|---|---|
| 501003P | TEMPORARY SHEETING | SF | 331 |
| 501018P | STAGE LINE EMBANKMENT SUPPORT SYSTEM | SF | 901 |
| | | | |
| | | | |

**DESIGN SOIL PARAMETERS FOR SHEETING DESIGN ABOVE EL. 60.00:**

ANGLE OF FRICTION = 30 DEGREES, c' = 0 (DRAINED CONDITION), UNIT WEIGHT = 125 pcf

**BELOW EL. 60.00:**

ANGLE OF FRICTION = 32 DEGREES, c' = 0 (DRAINED CONDITION)
Su = 3500 PSF (UNDRAINED CONDITION), UNIT WEIGHT = 125 pcf

GROUNDWATER TABLE = EL. 45

PARSONS BRINCKERHOFF CADD DATA

| | |
|---|---|
| OPERATOR | marquema |
| PLOT DATE | 01-DEC-2009 14:57 |
| PENTABLE | str-full.tbl |
| DESIGN FILE | T:\00404\struc\Bridge_2\md01.dgn |

| CONTROL SECTION | | JOB NO. | |
|---|---|---|---|
| DES. BY | M. CHEN | CHK. BY | L. LAU |
| DWN. BY | N. RODRIGUEZ | | |
| EST. BY | C. MANJUNATH | CHK. BY | M. CHEN |
| SPECS. BY | B. KARALIUS | | |
| IN CHARGE OF | B. KARALIUS | | |

| REVISION | BY | CKD. | DATE |
|---|---|---|---|
| | | | |
| | | | |
| | | | |
| | | | |

NEW JERSEY DEPARTMENT OF TRANSPORTATION
BUREAU OF STRUCTURAL ENGINEERING

# STAGE LINE EMBANKMENT SUPPORT SYSTEM AT WEST ABUTMENT

ROUTE 22 LIBERTY AVENUE & CONRAIL BRIDGE
CONTRACT NO. 057009080

HILLSIDE TOWNSHIP MUNICIPALITY — UNION COUNTY

PB AMERICAS, INC.
CERTIFICATION OF AUTHORIZATION NO. 24GA28029800

BRUCE J. KARALIUS
NEW JERSEY PROFESSIONAL ENGINEER LICENSE NO. 26369

SCALE: AS SHOWN

BRIDGE SHEET NO. B79 of B128

186

| STATE | FEDERAL PROJECT NO. | SHEET | TOTAL SHEETS |
|---|---|---|---|
| N.J. | FS-BR-0040 (168) | | |

STRUCTURE NO. 2004-163

ROUTE 22 OVER ACCESS ROAD
(FORMERLY STR. NO. 2004-153)

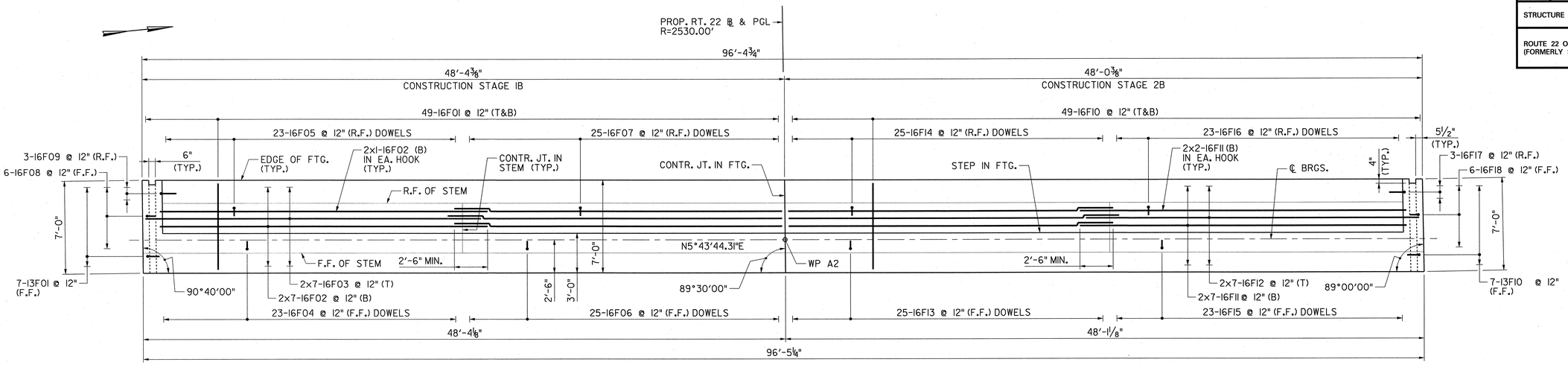


## WEST ABUTMENT FOOTING PLAN

1/4" = 1'-0"

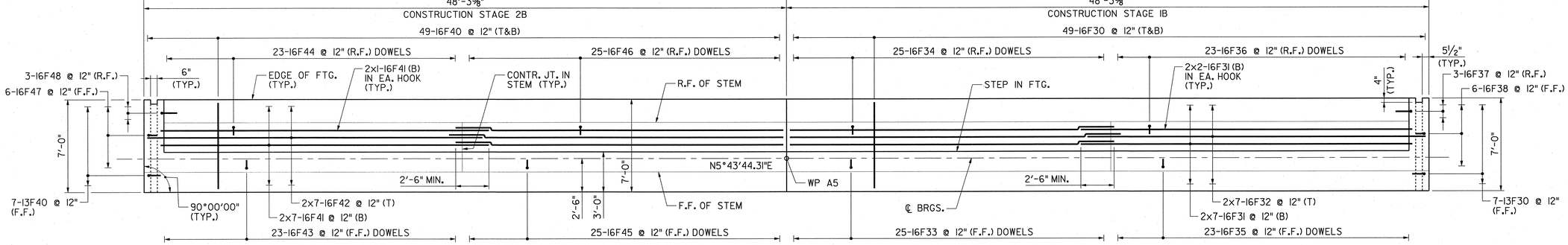


## EAST ABUTMENT FOOTING PLAN

1/4" = 1'-0"

## QUANTITIES

| ITEM NO. | DESCRIPTION | UNIT | CONTRACT QUANTITIES | | | |
|---|---|---|---|---|---|---|
| | | | WEST ABUTMENT | | EAST ABUTMENT | |
| | | | STAGE 1B | STAGE 2B | STAGE 1B | STAGE 2B |
| 504003P | REINFORCEMENT STEEL | LB | 2700 | 3800 | 3000 | 3150 |
| 504006P | REINFORCEMENT EPOXY COATED | LB | 1800 | 1800 | 1800 | 1800 |
| 504015P | CONCRETE FOOTING | CY | 28 | 28 | 28 | 28 |
| 504024P | CONCRETE ABUTMENT WALL | CY | 36 | 43 | 37 | 44 |
| 504036P | EPOXY WATERPROOFING | SY | 20 | 20 | 20 | 20 |
| 507039P | CONCRETE BRIDGE PARAPET, HPC | LF | 3.5 | 3.5 | 3.5 | 3.5 |
| 507045P | 15"X32" CONCRETE BARRIER CURB, BRIDGE, HPC | LF | 2 | 2 | 2 | 2 |
| 509084P | CHAIN-LINK, PVC-COATED STEEL, BRIDGE, 6'-3" HIGH | LF | 3.5 | 3.5 | 3.5 | 3.5 |
| 701015P | 2" RIGID METALLIC CONDUIT | LF | 27 | 30 | 11 | 11 |
| 701021P | 3" RIGID METALLIC CONDUIT | LF | - | 7 | - | 7 |
| 701120M | JUNCTION BOX FRAMES & COVER | UNIT | 1 | 1 | 1 | 1 |
| | | | | | | |

**NOTE:**
FOR WORKING POINT INFORMATION, SEE SH. B75.

1/4" = 1'-0"
1' 0 2' 4' 8'

| REVISION | BY | CKD. | DATE |
|---|---|---|---|
| | | | |

PARSONS BRINCKERHOFF CADD DATA
OPERATOR marquema
PLOT DATE 01-DEC-2009 14:57
PENTABLE str-full.tbl
DESIGN FILE T:\00404\struc\Bridge_2\sb02.dgn

| CONTROL SECTION | | JOB NO. | |
|---|---|---|---|
| DES. BY | M. CHEN | CHK. BY | L. LAU |
| DWN. BY | J. BOGNAR | | |
| EST. BY | C. MANJUNATH | CHK. BY | M. CHEN |
| SPECS. BY | B. KARALIUS | | |
| IN CHARGE OF | B. KARALIUS | | |

NEW JERSEY DEPARTMENT OF TRANSPORTATION
BUREAU OF STRUCTURAL ENGINEERING

# ABUTMENT FOOTING PLANS

ROUTE 22 LIBERTY AVENUE & CONRAIL BRIDGE
CONTRACT NO. 057009080

HILLSIDE TOWNSHIP MUNICIPALITY — UNION COUNTY

PB AMERICAS, INC.
CERTIFICATION OF AUTHORIZATION NO. 24GA28029800
BRUCE J. KARALIUS
NEW JERSEY PROFESSIONAL ENGINEER LICENSE NO. 26369

SCALE: AS SHOWN

BRIDGE SHEET NO. B80 of B128

187

| STATE | FEDERAL PROJECT NO. | SHEET | TOTAL SHEETS |
|---|---|---|---|
| N.J. | FS-BR-0040 (168) | | |

STRUCTURE NO. 2004-163

ROUTE 22 OVER ACCESS ROAD
(FORMERLY STR. NO. 2004-153)

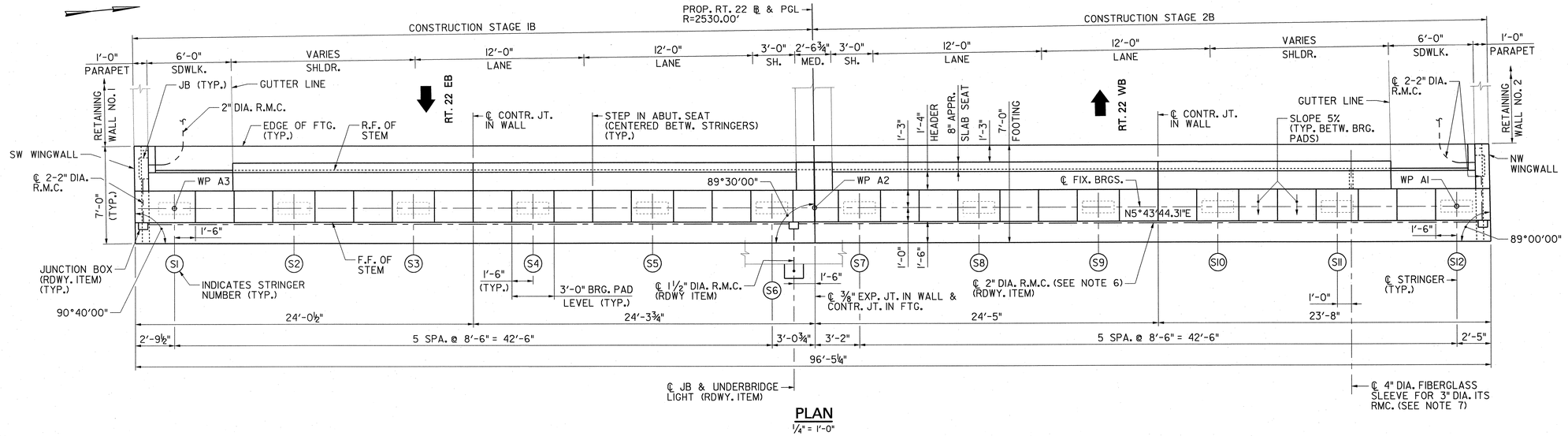


## PLAN
¼" = 1'-0"

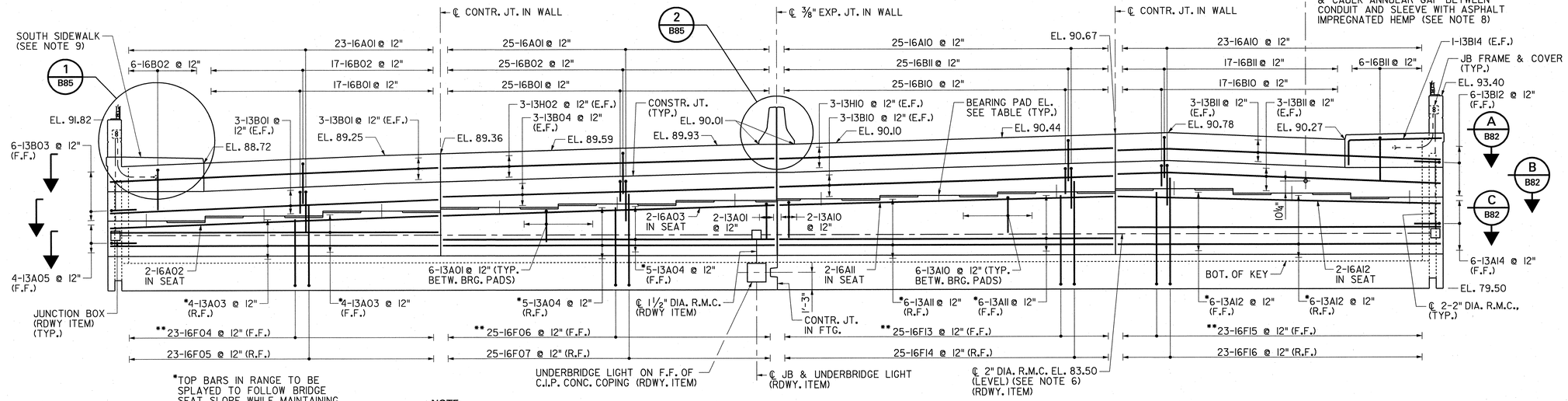


*TOP BARS IN RANGE TO BE SPLAYED TO FOLLOW BRIDGE SEAT SLOPE WHILE MAINTAINING MINIMUM BAR SPACING.

**TRIM BARS AS REQUIRED.

NOTE:
C.I.P. COPING ON RETAINING WALL NO. 3 NOT SHOWN FOR CLARITY.

## ELEVATION
¼" = 1'-0"

### BEARING PAD ELEVATIONS

| S1 | S2 | S3 | S4 | S5 | S6 | S7 | S8 | S9 | S10 | S11 | S12 |
|---|---|---|---|---|---|---|---|---|---|---|---|
| 84.56 | 84.90 | 85.25 | 85.50 | 85.74 | 85.99 | 86.09 | 86.34 | 86.58 | 86.80 | 86.46 | 86.13 |

**NOTES:**

1. WORK THIS SHEET WITH SH. B80.
2. ELEVATIONS SHOWN AT BEARING LOCATIONS ARE TOP OF CONCRETE BELOW BEARINGS.
3. TOP OF HEADER ELEVATIONS ARE TO MATCH TOP OF DECK AT FRONT FACE OF HEADER. HEADER SHALL FOLLOW ROADWAY GRADE.
4. HEADER SHALL BE CONSTRUCTED AFTER DECK SLAB HAS BEEN POURED.
5. SEE ELECTRICAL PLANS FOR UNDERBRIDGE LIGHTING AND CONDUITS.
6. THE CONTRACTOR SHALL INSTALL GALVANIZED STEEL CLAMPS WITH STAINLESS STEEL EXPANSION ANCHORS, AT INTERVALS NOT EXCEEDING 10' FOR ATTACHING THE 2-2" DIAMETER R.M.C. ALONG THE FRONT FACE OF WEST ABUTMENT. CLAMPS ARE TO BE APPROVED BY ENGINEER. THE COST THEREOF IS TO BE INCLUDED IN THE ROADWAY PAY-ITEM FOR THE CONDUITS.
7. LIMITS OF 3" DIA. ITS R.M.C., BRIDGE PAY ITEM, SHALL EXTEND TO FIVE FEET PAST REAR FACE OF STEM AFTER WHICH IT BECOMES A ROADWAY PAY ITEM.
8. COST OF 4" DIA. FIBERGLASS SLEEVE TO BE INCLUDED IN THE COST OF THE CONDUIT.
9. SOUTH SIDEWALK IS TO BE CONSTRUCTED IN STAGE 2D. PRIOR TO CONSTRUCTION OF THE SOUTH SIDEWALK, THE CONTRACTOR SHALL CLEAN AND ROUGHEN (TO AN AMPLITUDE OF ¼") THE EXISTING CONTACT SURFACE.

| CONTROL SECTION | | JOB NO. | |
|---|---|---|---|
| DES. BY | M. CHEN | CHK. BY | L. LAU |
| DWN. BY | J. BOGNAR | | |
| EST. BY | C. MANJUNATH | CHK. BY | M. CHEN |
| SPECS. BY | B. KARALIUS | | |
| IN CHARGE OF | B. KARALIUS | | |

| REVISION | BY | CKD. | DATE |
|---|---|---|---|
| | | | |

1/4" = 1'-0"
1' 0 2' 4' 8'

NEW JERSEY DEPARTMENT OF TRANSPORTATION
BUREAU OF STRUCTURAL ENGINEERING

# WEST ABUTMENT PLAN AND ELEVATION

ROUTE 22 LIBERTY AVENUE & CONRAIL BRIDGE
CONTRACT NO. 057009080

HILLSIDE TOWNSHIP MUNICIPALITY — UNION COUNTY

PB AMERICAS, INC.
CERTIFICATION OF AUTHORIZATION NO. 24GA28029800
BRUCE J. KARALIUS
NEW JERSEY PROFESSIONAL ENGINEER LICENSE NO. 26369

SCALE: AS SHOWN

BRIDGE SHEET NO. B81 of B128

188

PARSONS BRINCKERHOFF CADD DATA
OPERATOR marquema
PLOT DATE 01-DEC-2009 14:57
PENTABLE str-full.tbl
DESIGN FILE T:\NJ0404\struc\Bridge_2\ab02_b.dgn

| STATE | FEDERAL PROJECT NO. | SHEET | TOTAL SHEETS |
|---|---|---|---|
| N.J. | FS-BR-0040 (168) | | |

STRUCTURE NO. 2004-163

ROUTE 22 OVER ACCESS ROAD
(FORMERLY STR. NO. 2004-153)

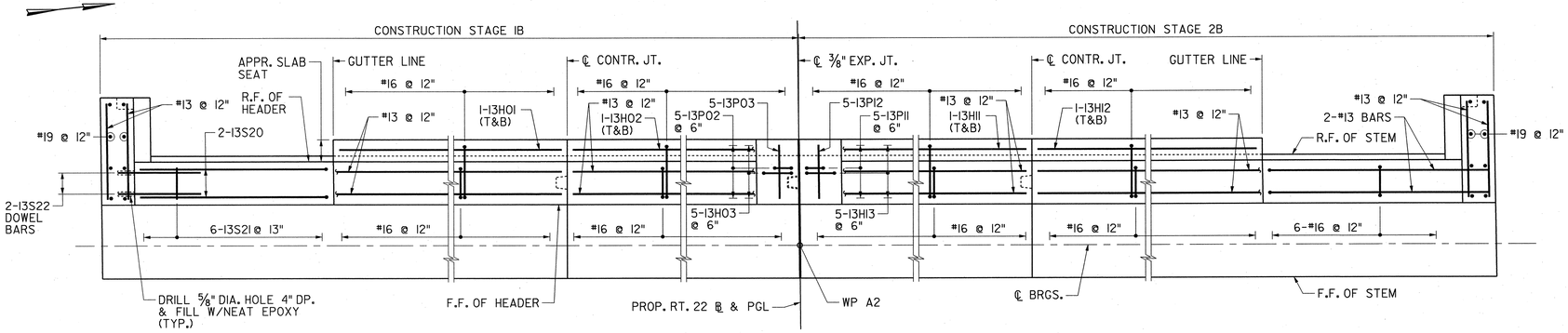


SECTION A
1/2" = 1'-0"
B81

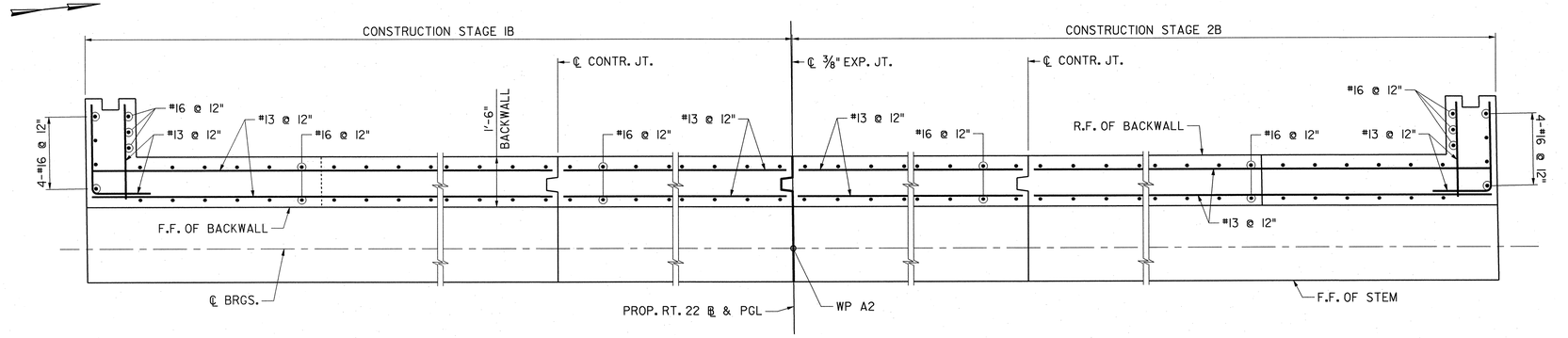


SECTION B
1/2" = 1'-0"
B81

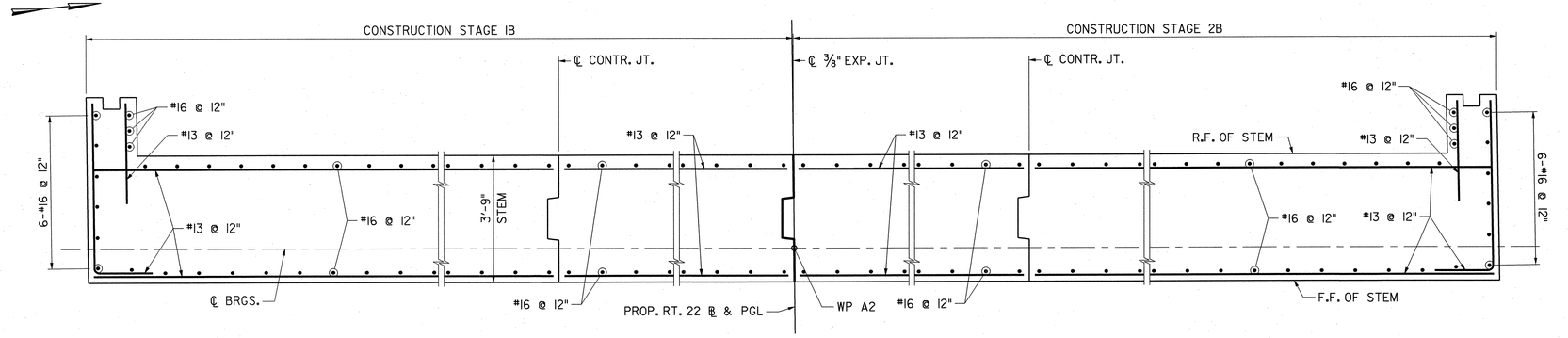


SECTION C
1/2" = 1'-0"
B81

NOTES:

1. FOR NOTES, SEE SH. B81.

PARSONS BRINCKERHOFF CADD DATA
OPERATOR marruema
PLOT DATE 01-DEC-2009 14:57
PENTABLE str-full.tbl
DESIGN FILE T:\00404\struc\Bridge_2\ab02_e.dgn

| CONTROL SECTION | | JOB NO. | |
|---|---|---|---|
| DES. BY | M. CHEN | CHK. BY | L. LAU |
| DWN. BY | J. BOGNAR | | |
| EST. BY | C. MANJUNATH | CHK. BY | M. CHEN |
| SPECS. BY | B. KARALIUS | | |
| IN CHARGE OF | B. KARALIUS | | |

1/2" = 1'-0"
1' 0 1' 2' 4'

| REVISION | BY | CKD. | DATE |
|---|---|---|---|
| | | | |

NEW JERSEY DEPARTMENT OF TRANSPORTATION
BUREAU OF STRUCTURAL ENGINEERING

# WEST ABUTMENT SECTIONS

ROUTE 22 LIBERTY AVENUE & CONRAIL BRIDGE
CONTRACT NO. 057009080

HILLSIDE TOWNSHIP
MUNICIPALITY

UNION
COUNTY

PB AMERICAS, INC.
CERTIFICATION OF AUTHORIZATION NO. 24GA28029800

BRUCE J. KARALIUS
NEW JERSEY PROFESSIONAL ENGINEER LICENSE NO. 26369

SCALE: AS SHOWN

BRIDGE SHEET NO. B82 of B128

189

| STATE | FEDERAL PROJECT NO. | SHEET | TOTAL SHEETS |
|---|---|---|---|
| N.J. | FS-BR-0040 (168) | | |

STRUCTURE NO. 2004-163

ROUTE 22 OVER ACCESS ROAD
(FORMERLY STR. NO. 2004-153)

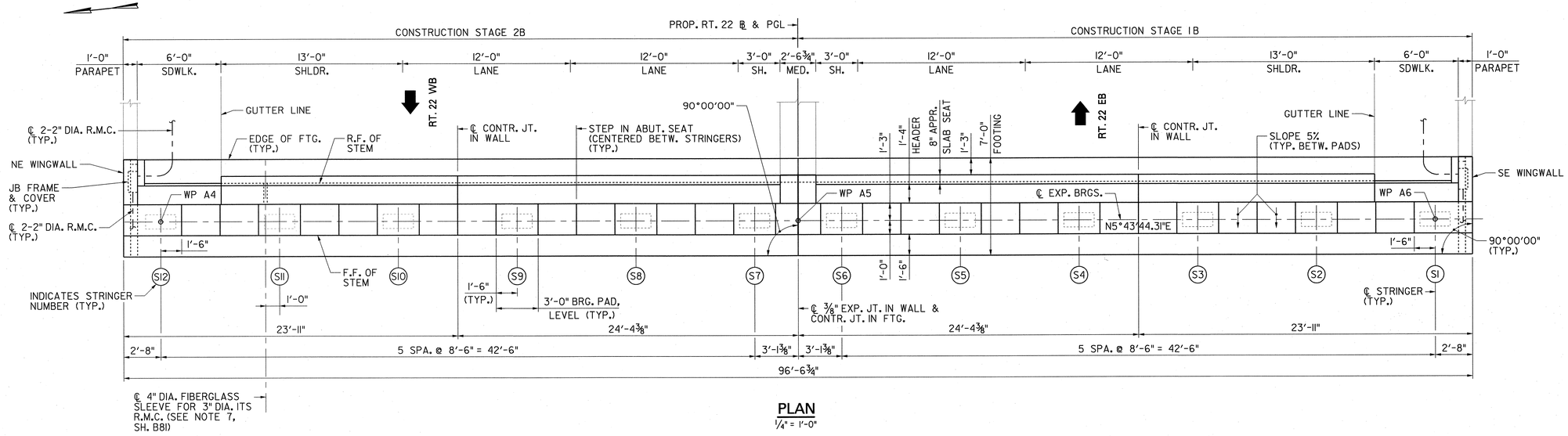


## PLAN
1/4" = 1'-0"

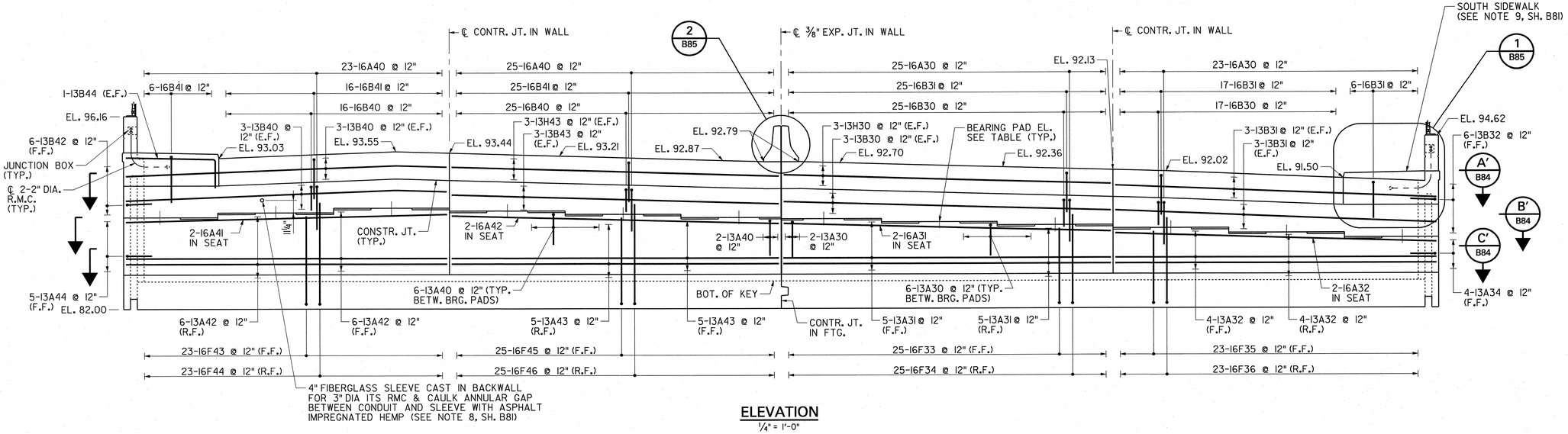


## ELEVATION
1/4" = 1'-0"

## BEARING PAD ELEVATIONS

| S1 | S2 | S3 | S4 | S5 | S6 | S7 | S8 | S9 | S10 | S11 | S12 |
|---|---|---|---|---|---|---|---|---|---|---|---|
| 87.16 | 87.50 | 87.84 | 88.08 | 88.32 | 88.57 | 88.67 | 88.91 | 89.16 | 89.38 | 89.04 | 88.70 |

NOTES:
1. WORK THIS SHEET WITH SH. B80.
2. FOR ADDITIONAL MEDIAN BARRIER DETAILS, SEE NJDOT STANDARD BRIDGE CONSTRUCTION DETAILS SH. BCD-507-9.
3. FOR PARAPET REINFORCING DETAILS, SEE SH. B85.
4. FOR ADDITIONAL NOTES, SEE SH. B81.

1/4" = 1'-0"
1' 0 2' 4' 8'

| REVISION | BY | CKD. | DATE |
|---|---|---|---|
| | | | |

PARSONS BRINCKERHOFF CADD DATA
OPERATOR marquema
PLOT DATE 01-DEC-2009 14:57
PENTABLE str-ful.tbl
DESIGN FILE I:\x00404\struc\Bridge_2\eb02.dgn

| CONTROL SECTION | | JOB NO. | |
|---|---|---|---|
| DES. BY | M. CHEN | CHK. BY | L. LAU |
| DWN. BY | J. BOGNAR | | |
| EST. BY | C. MANJUNATH | CHK. BY | M. CHEN |
| SPECS. BY | B. KARALIUS | | |
| IN CHARGE OF | B. KARALIUS | | |

NEW JERSEY DEPARTMENT OF TRANSPORTATION
BUREAU OF STRUCTURAL ENGINEERING

# EAST ABUTMENT PLAN AND ELEVATION

ROUTE 22 LIBERTY AVENUE & CONRAIL BRIDGE
CONTRACT NO. 057009080

HILLSIDE TOWNSHIP MUNICIPALITY — UNION COUNTY

PB AMERICAS, INC.
CERTIFICATION OF AUTHORIZATION NO. 24GA28029800
BRUCE J. KARALIUS
NEW JERSEY PROFESSIONAL ENGINEER LICENSE NO. 26369

SCALE: AS SHOWN

BRIDGE SHEET NO. B83 of B128

190

| STATE | FEDERAL PROJECT NO. | SHEET | TOTAL SHEETS |
|---|---|---|---|
| N.J. | FS-BR-0040 (168) | | |

STRUCTURE NO. 2004-163

ROUTE 22 OVER ACCESS ROAD
(FORMERLY STR. NO. 2004-153)

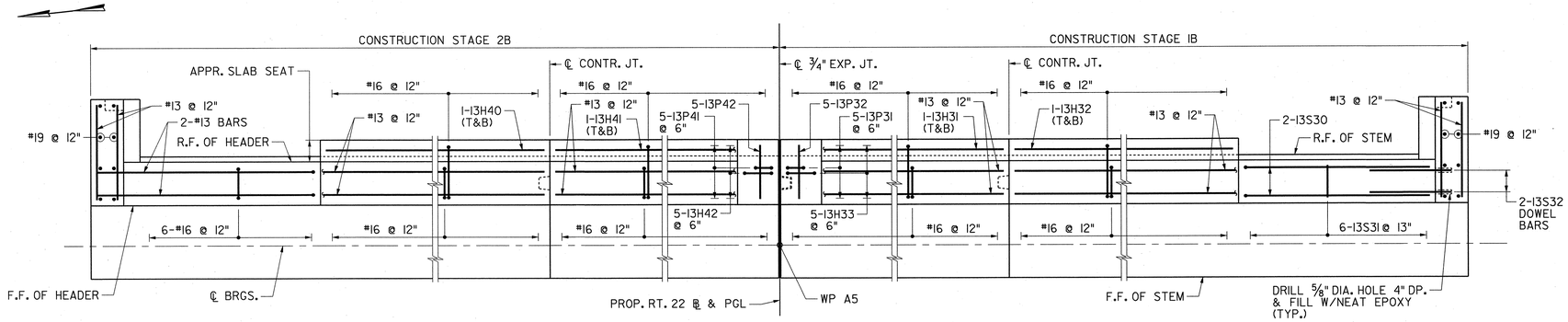


SECTION A' B83
1/2" = 1'-0"

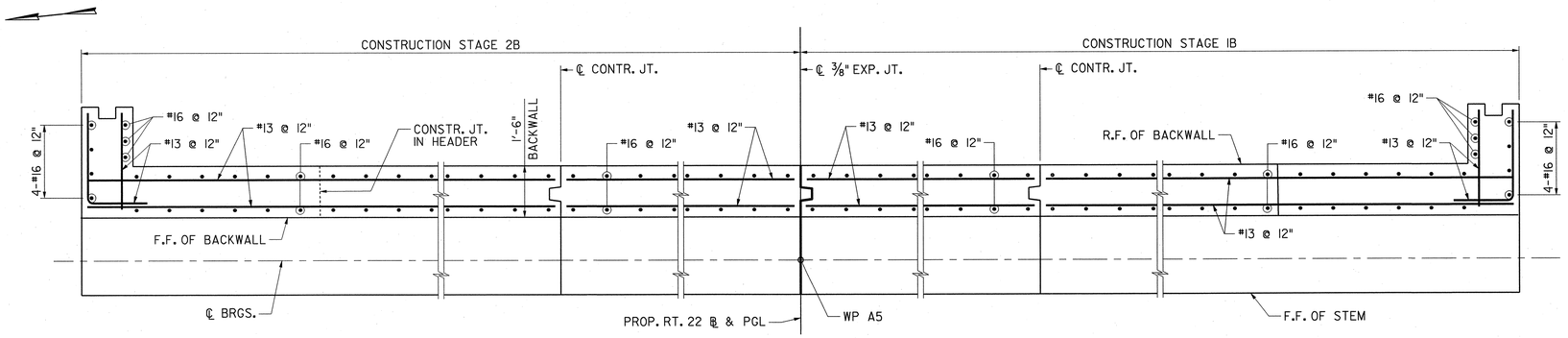


SECTION B' B83
1/2" = 1'-0"

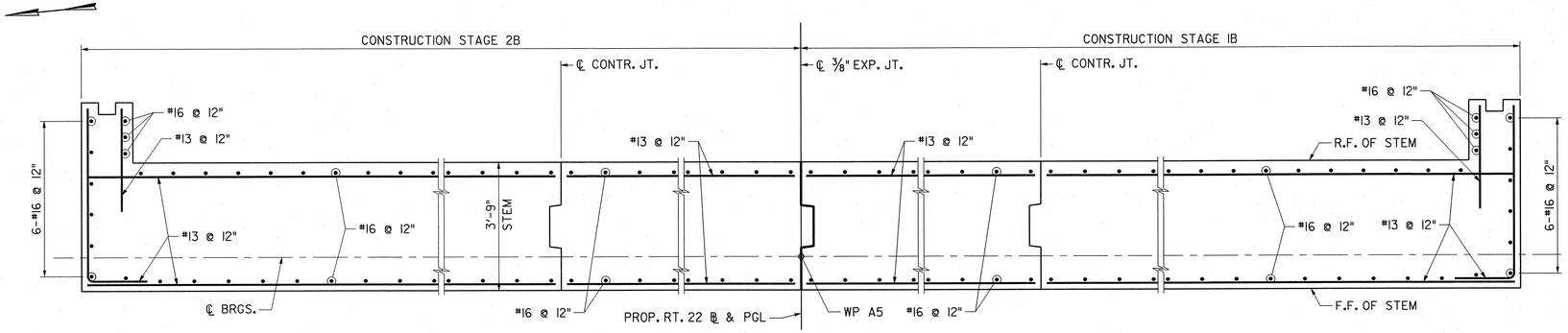


SECTION C' B83
1/2" = 1'-0"

1/2" = 1'-0"
1' 0 1' 2' 4'

| REVISION | BY | CKD. | DATE |
|---|---|---|---|
| | | | |

NEW JERSEY DEPARTMENT OF TRANSPORTATION
BUREAU OF STRUCTURAL ENGINEERING

# EAST ABUTMENT SECTIONS

ROUTE 22 LIBERTY AVENUE & CONRAIL BRIDGE
CONTRACT NO. 057009080

HILLSIDE TOWNSHIP MUNICIPALITY — UNION COUNTY

PB AMERICAS, INC.
CERTIFICATION OF AUTHORIZATION NO. 24GA28029800
BRUCE J. KARALIUS
NEW JERSEY PROFESSIONAL ENGINEER LICENSE NO. 26369

SCALE: AS SHOWN

BRIDGE SHEET NO. B84 of B128

191

| CONTROL SECTION | | JOB NO. | |
|---|---|---|---|
| DES. BY | M. CHEN | CHK. BY | L. LAU |
| DWN. BY | J. BOGNAR | | |
| EST. BY | C. MANJUNATH | CHK. BY | M. CHEN |
| SPECS. BY | B. KARALIUS | | |
| IN CHARGE OF | B. KARALIUS | | |

PARSONS BRINCKERHOFF CADD DATA
OPERATOR maruema
PLOT DATE 01-DEC-2009 14:58
PENTABLE str-full.tbl
DESIGN FILE T:\00404\struc\Bridge_2\ab02_e.dgn

| STATE | FEDERAL PROJECT NO. | SHEET | TOTAL SHEETS |
|---|---|---|---|
| N.J. | FS-BR-0040 (168) | | |

STRUCTURE NO. 2004-163

ROUTE 22 OVER ACCESS ROAD
(FORMERLY STR. NO. 2004-153)

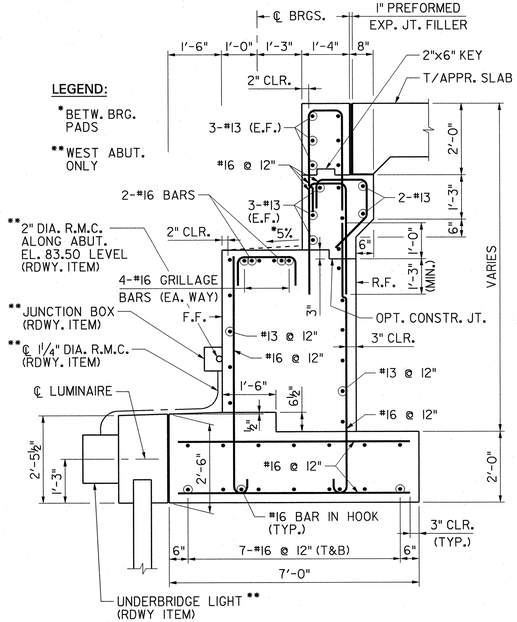


## TYPICAL SECTION

½" = 1'-0"

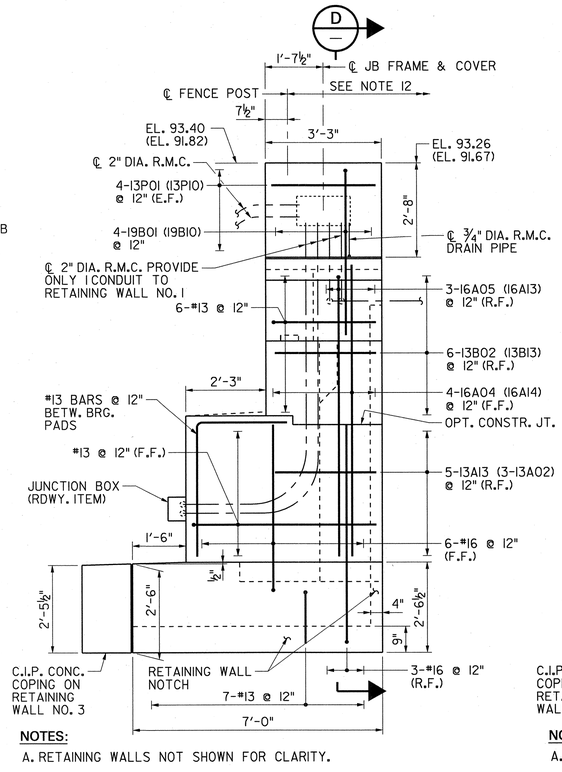


NOTES:

A. RETAINING WALLS NOT SHOWN FOR CLARITY.

B. ELEVATIONS AND BAR MARKS FOR SOUTH END SHOWN IN PARENTHESES.

## WEST ABUTMENT – END ELEVATION

(NW WINGWALL SHOWN, SW WINGWALL OPPOSITE HAND)

½" = 1'-0"

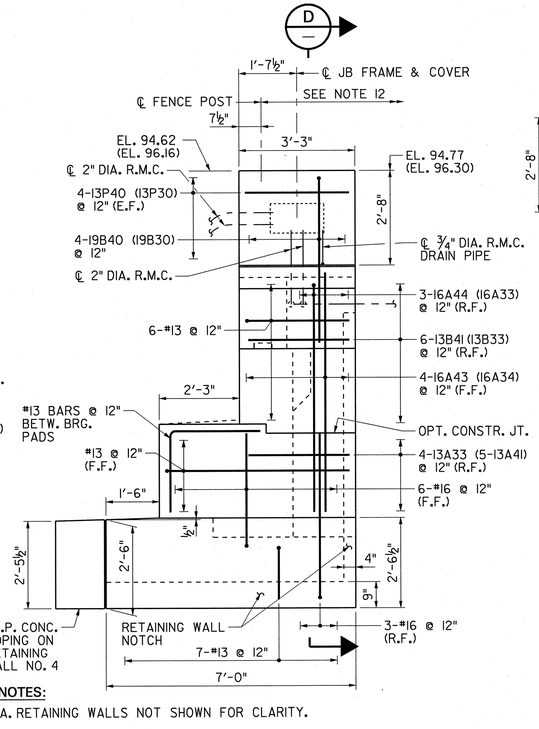


NOTES:

A. RETAINING WALLS NOT SHOWN FOR CLARITY.

B. ELEVATIONS AND BAR MARKS FOR SOUTH END SHOWN IN PARENTHESES.

## EAST ABUTMENT – END ELEVATION

(SE WINGWALL SHOWN, NE WINGWALL OPPOSITE HAND)

½" = 1'-0"

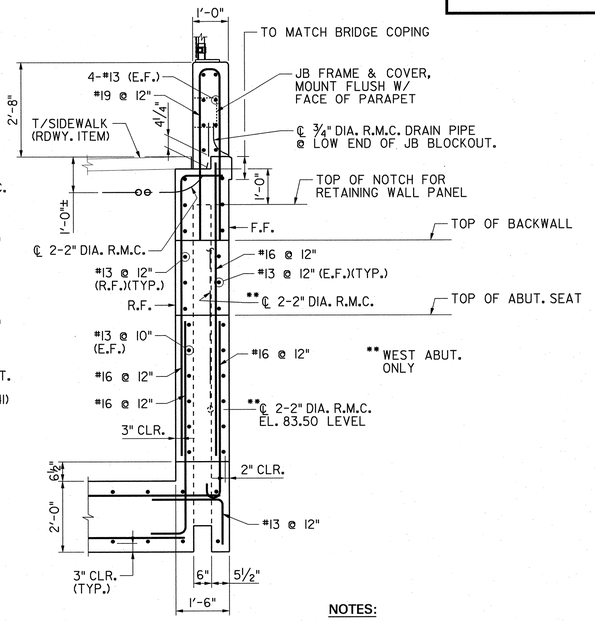


NOTES:

1. BACKFILL MATERIAL BEHIND ABUTMENT TO BE THE SAME AS THAT USED FOR THE RETAINING WALLS.
2. FOR ADDITIONAL NOTES, SEE SH. B81.
3. TIE TOP AND BOTTOM MATS OF REINFORCING STEEL IN FOOTING WITH #13 TIE BARS AT A MAXIMUM SPACING OF 4'-0" IN BOTH DIRECTIONS. PROVIDE TIE BARS WITH 90° HOOK AT ONE END AND 135° HOOKS AT THE OTHER END. ALTERNATE 90° AND 135° HOOKS AT TOP IN ALTERNATE TIES.
4. FOR CLASS OF CONCRETE OF EACH COMPONENT, SEE NJDOT BRIDGE CONSTRUCTION DETAIL, BCD-504-1.
5. CHAMFER ALL EXPOSED EDGES ¾".
6. HEADER SHALL BE CONSTRUCTED AFTER DECK SLAB HAS BEEN POURED.
7. ALL REINFORCING COVER SHALL BE 2", UNLESS NOTED OTHERWISE.
8. FOR BRG. DETAILS, SEE SH. B87.
9. FOR ANCHOR BOLT DETAIL, SEE SH. B86.
10. FOR ADDITIONAL MEDIAN BARRIER DETAILS, SEE NJDOT STANDARD BRIDGE CONSTRUCTION DETAILS SH. BCD-507-9.
11. FOR JUNCTION BOX FRAME AND COVER DETAILS, SEE SH. B86.
12. POST SPACING TO BE DETERMINED BY CONTRACTOR - SEE RETAINING WALL GENERAL NOTES NO. 8, SH. B105.
13. COST FOR CONCRETE IN SIDEWALK PLACED IN CONSTRUCTION STAGE 2D TO BE INCLUDED IN PAY ITEM, "CONCRETE BRIDGE SIDEWALK, HPC".

## SECTION D

½" = 1'-0"

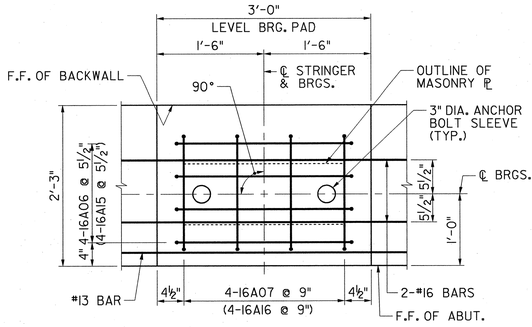


## WEST ABUTMENT – GRILLAGE DETAIL

(STAGE 1B SHOWN, STAGE 2B IN PARENTHESES)

1" = 1'-0"

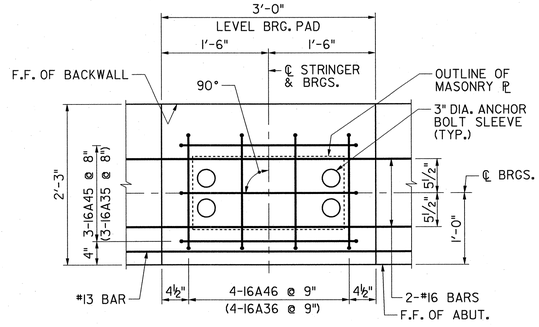


## EAST ABUTMENT – GRILLAGE DETAIL

(STAGE 2B SHOWN, STAGE 1B IN PARENTHESES)

1" = 1'-0"

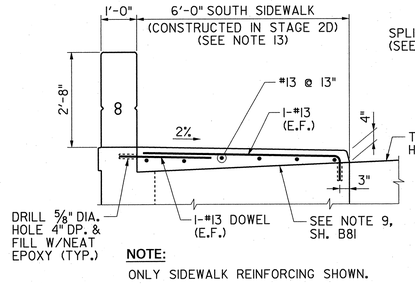


NOTE:

ONLY SIDEWALK REINFORCING SHOWN.

WEST ABUTMENT SHOWN,
EAST ABUTMENT OPPOSITE HAND

## DETAIL 1

½" = 1'-0"

B81,83

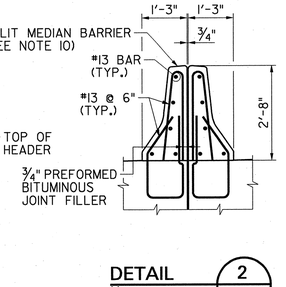


## DETAIL 2

½" = 1'-0"

B81,83

| CONTROL SECTION | | JOB NO. | |
|---|---|---|---|
| DES. BY | M. CHEN | CHK. BY | L. LAU |
| DWN. BY | J. BOGNAR | | |
| EST. BY | C. MANJUNATH | CHK. BY | M. CHEN |
| SPECS. BY | B. KARALIUS | | |
| IN CHARGE OF | B. KARALIUS | | |

PARSONS BRINCKERHOFF CADD DATA
OPERATOR marruema
PLOT DATE 01-DEC-2009 14:58
PENTABLE str-full.tbl
DESIGN FILE T:\NJ0404\structure\Bridge_2\ab02_f.dgn

1/2" = 1'-0"

| REVISION | BY | CKD. | DATE |
|---|---|---|---|
| | | | |

NEW JERSEY DEPARTMENT OF TRANSPORTATION
BUREAU OF STRUCTURAL ENGINEERING

# ABUTMENT SECTIONS AND DETAILS

ROUTE 22 LIBERTY AVENUE & CONRAIL BRIDGE
CONTRACT NO. 057009080

HILLSIDE TOWNSHIP MUNICIPALITY — UNION COUNTY

PB AMERICAS, INC.
CERTIFICATION OF AUTHORIZATION NO. 24GA28029800
BRUCE J. KARALIUS
NEW JERSEY PROFESSIONAL ENGINEER LICENSE NO. 26369

SCALE: AS SHOWN

BRIDGE SHEET NO. B85 of B128

192

| STATE | FEDERAL PROJECT NO. | SHEET | TOTAL SHEETS |
|---|---|---|---|
| N.J. | FS-BR-0040 (168) | | |

STRUCTURE NO. 2004-163

ROUTE 22 OVER ACCESS ROAD
(FORMERLY STR. NO. 2004-153)

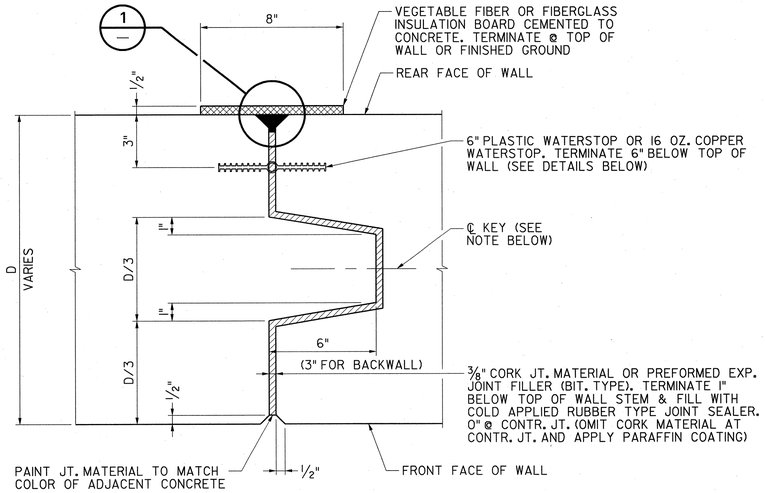


**NOTE:**

IN STEM, KEY TO EXTEND FROM TOP OF FOOTING TO 1'-0" BELOW TOP OF BRIDGE SEAT.
IN BACKWALL, KEY TO EXTEND FROM TOP OF BRIDGE SEAT TO 6" BELOW TOP OF BACKWALL.

## WALL EXPANSION JOINT DETAIL (SHOWN)
## WALL CONTRACTION JOINT DETAIL (SIMILAR, EXCEPT AS NOTED)

3" = 1'-0"

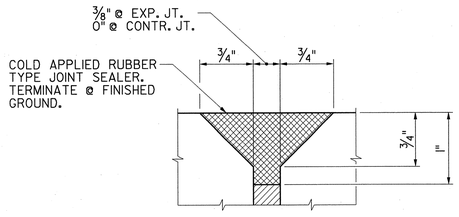


DETAIL 1 — N.T.S.

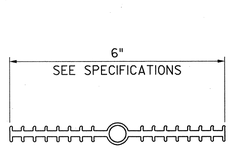


PLASTIC WATERSTOP
N.T.S.

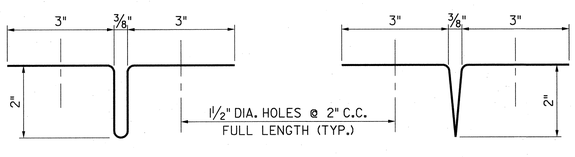


EXPANSION CONTRACTION

16 OZ. COPPER WATERSTOP – 10" WIDE
N.T.S.

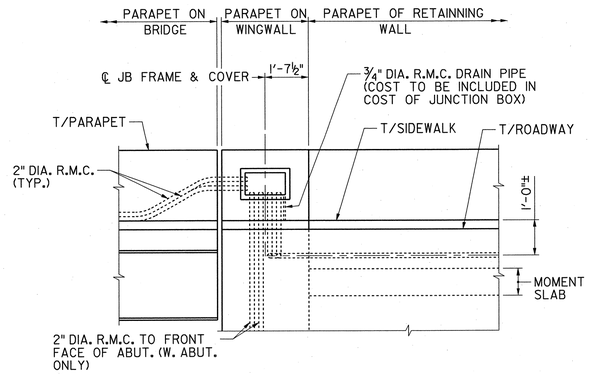


2" R.M.C. DETAIL – ELEVATION VIEW
N.T.S.

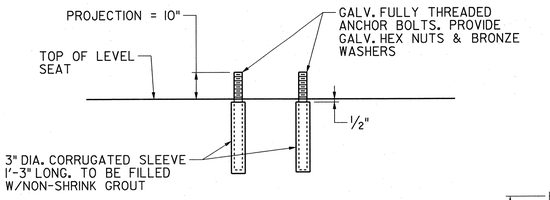


ANCHOR BOLT AND SLEEVE DETAIL
N.T.S.

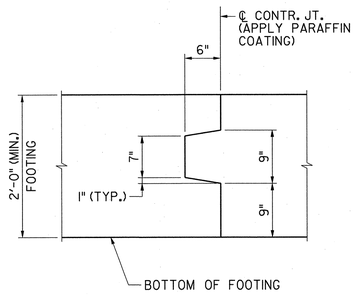


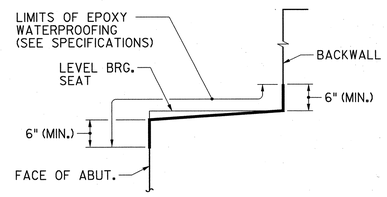


AT ABUTMENT

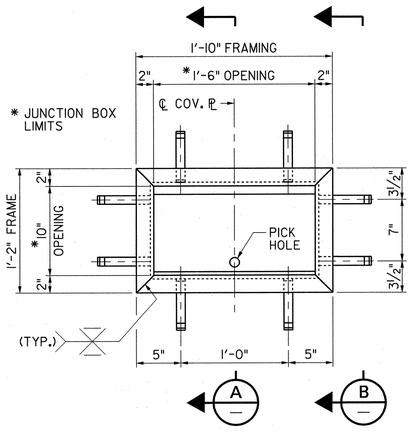


ELEVATION

NOTE:

SEE NJDOT STANDARD BRIDGE CONSTRUCTION DETAILS BCD-504-5, FOR ADDITIONAL DETAILS AND INFORMATION NOT SHOWN.

FOOTING CONTRACTION JOINT
1" = 1'-0"

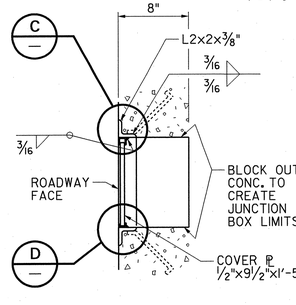


SECTION A

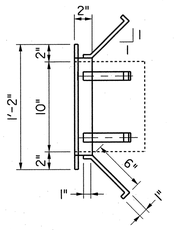


SECTION B

EPOXY WATERPROOFING (WITH GRIT) SEAL COAT LIMITS
¾" = 1'-0"

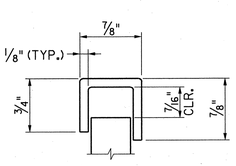


DETAIL C

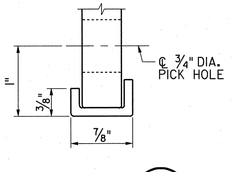


DETAIL D

JUNCTION BOX FRAME AND COVER DETAILS
N.T.S.

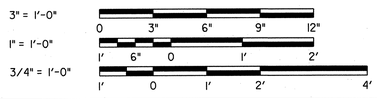


| REVISION | BY | CKD. | DATE |
|---|---|---|---|
| | | | |

NEW JERSEY DEPARTMENT OF TRANSPORTATION
BUREAU OF STRUCTURAL ENGINEERING

# MISCELLANEOUS SUBSTRUCTURE DETAILS

ROUTE 22 LIBERTY AVENUE & CONRAIL BRIDGE
CONTRACT NO. 057009080

HILLSIDE TOWNSHIP MUNICIPALITY — UNION COUNTY

PB AMERICAS, INC.
CERTIFICATION OF AUTHORIZATION NO. 24GA28029800

BRUCE J. KARALIUS
NEW JERSEY PROFESSIONAL ENGINEER LICENSE NO. 26369

SCALE: AS SHOWN

BRIDGE SHEET NO. B86 of B128

193

| CONTROL SECTION | | JOB NO. | |
|---|---|---|---|
| DES. BY | M. CHEN | CHK. BY | L. LAU |
| DWN. BY | M. P. MARUE | | |
| EST. BY | C. MANJUNATH | CHK. BY | M. CHEN |
| SPECS. BY | B. KARALIUS | | |

IN CHARGE OF B. KARALIUS

PARSONS BRINCKERHOFF CADD DATA
OPERATOR marruema
PLOT DATE 01-DEC-2009 14:58
PENTABLE str-full.tbl
DESIGN FILE T:\00404\struc\Bridge_2\su02.dgn

| STATE | FEDERAL PROJECT NO. | SHEET | TOTAL SHEETS |
|---|---|---|---|
| N.J. | FS-BR-0040 (168) | | |

STRUCTURE NO. 2004-163

ROUTE 22 OVER ACCESS ROAD
(FORMERLY STR. NO. 2004-153)

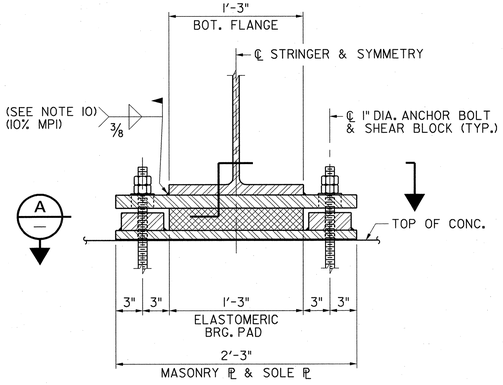


END ELEVATION

## FIXED BEARING (TYPES F & FA)

1 1/2" = 1'-0"

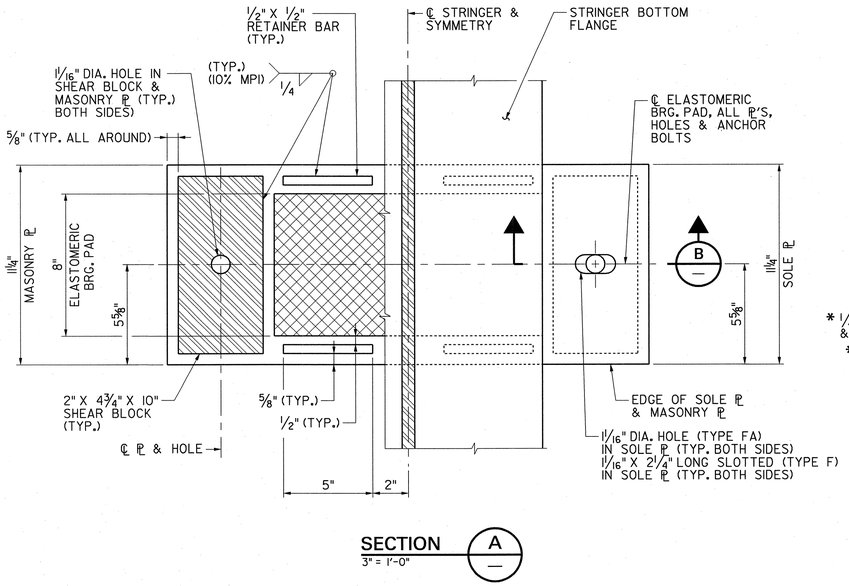


SECTION A
3" = 1'-0"

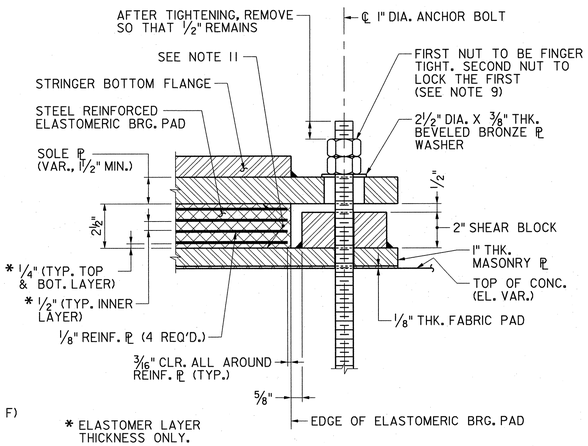


SECTION B
3" = 1'-0"

### NOTES:

1. FOR GENERAL NOTES SEE SH. 76.
2. UNLESS OTHERWISE NOTED, ALL STRUCTURAL STEEL SHALL CONFORM TO AASHTO M270/M270M, GRADE 50W. ALL EXPOSED STEEL SURFACES (EXCEPT FOR SURFACES IN CONTACT WITH ELASTOMERIC PAD) SHALL BE SHOP PAINTED - SEE NOTE 7, SH. B89. SURFACES IN CONTACT WITH ELASTOMERIC PAD SHALL ONLY BE PRIMED. COATING SYSTEM TO BE SAME AS FOR STEEL BEAMS.
3. ALL ANCHOR BOLTS SHALL BE HIGH STRENGTH CONFORMING TO ASTM A449, TYPE 3 AND SHALL BE GALVANIZED AS PER ASTM A153.
4. FOR ELASTOMERIC BEARING PADS, SEE SUBSECTION 907-02 OF THE STANDARD SPECIFICATIONS.
5. ANY DAMAGE TO GALVANIZED SURFACES SHALL BE REPAIRED IN ACCORDANCE WITH ASTM D2092, METHOD A OR D.
6. WELDING SHALL BE IN ACCORDANCE WITH AWS D1.5.
7. IN PREPARING THE CONCRETE PAD AND IN TAPERING THE SOLE PLATE THE CONTRACTOR SHALL TAKE INTO ACCOUNT FABRICATION TOLERANCES OF THE ELASTOMERIC BEARINGS AND THE BEAMS, AND BE AWARE OF ANGLE CHANGES OF SOLE PLATES AND BEARINGS DUE TO THE IMPOSITION OF DEAD LOADS. UNDER FULL DEAD LOAD THE ELASTOMERIC BEARING PAD AND THE BOTTOM OF SOLE PLATE SHALL BE LEVEL.
8. THE POSITION OF THE FIXED BEARING ANCHOR BOLTS RELATIVE TO THE CENTER OF THE SLOTTED HOLES SHALL BE SET SUCH THAT THE ANCHOR BOLTS WILL BE TRANSVERSELY CENTERED IN THEIR RESPECTIVE SLOTTED HOLES AT 70° F.
9. THE DOUBLE NUTS FOR ANCHOR BOLTS SHALL BE TIGHTENED AND LOCKED AFTER THE FIXED BEARING IS SET. THERE SHALL BE NO SUBSEQUENT TIGHTENING OF NUTS AFTER THE BEARING IS SUBJECTED TO ADDITIONAL DEAD LOADS.
10. WELDING OF BOTTOM FLANGE TO SOLE PLATE AT THE BEARINGS SHALL BE CONTROLLED SO THAT SOLE PLATE TEMPERATURE AT THE ELASTOMERIC BEARING PAD SURFACE DOES NOT EXCEED 200° F, AS DETERMINED BY PYROMETRIC STICKS OR OTHER TEMPERATURE MONITORING DEVICES. QUENCHING TO ACCELERATE COOLING IS NOT PERMITTED.
11. ELASTOMERIC BEARING PADS SHALL BE SHOP VULCANIZED TO TOP AND BOTTOM CONTACT SURFACES AT ALL BEARINGS.
12. IN ORDER TO PREVENT EXCESSIVE DEFORMATION OF ELASTOMERIC BEARING PADS, BEAMS AND BEARINGS SHALL BE ERECTED WHEN THE AMBIENT AIR TEMPERATURE AVERAGED OVER THE PREVIOUS 24 HOURS IS BETWEEN 20°F AND 80°F.
13. FOR LOCATIONS OF BEARING TYPES, SEE FRAMING PLAN, SH. B88.

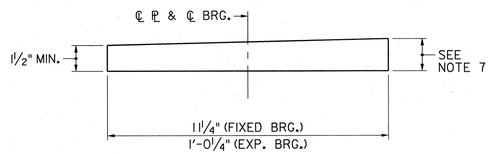


## BEVELED SOLE PLATE DETAIL

N.T.S.

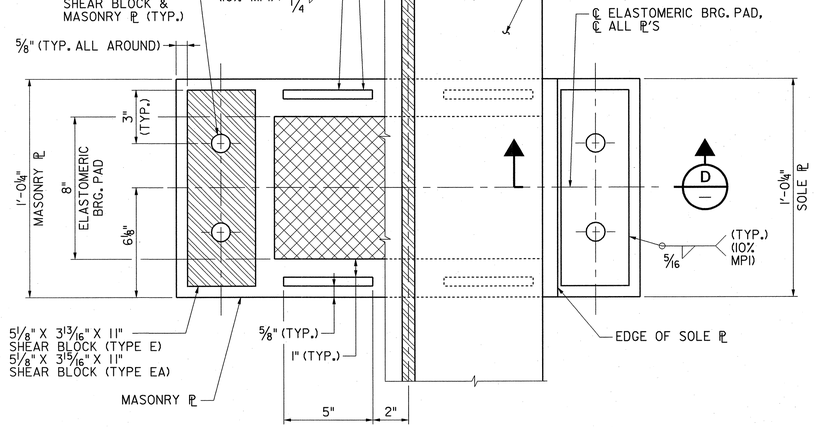


SECTION C
3" = 1'-0"

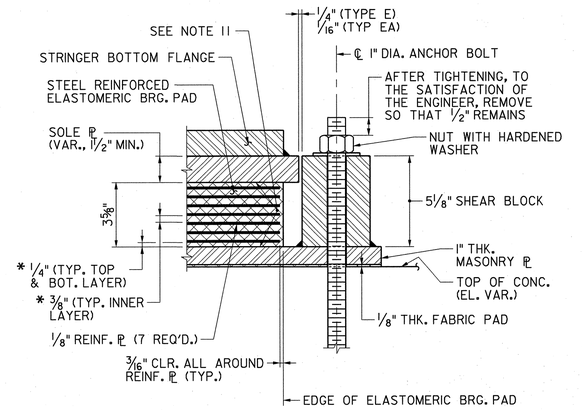


SECTION D
3" = 1'-0"

## EXPANSION BEARING (TYPES E & EA)

1 1/2" = 1'-0"

| QUANTITIES | | | | |
|---|---|---|---|---|
| ITEM NO. | DESCRIPTION | UNIT | CONTRACT QUANTITIES STAGE 1B | STAGE 2B |
| 506006P | REINFORCED ELASTOMERIC BEARING ASSEMBLY | UNIT | 12 | 12 |
| | | | | |

## TABLE A

| LOCATION | LOADS (k) DL (MAX.) | DL (MIN.) | LL (MAX.) | LL (MIN.) | MAX. THERMAL MOVEMENT LONGITUDINAL (IN) | TRANSVERSE (IN) | NO. OF BEARING TYPES E | EA | F | FA |
|---|---|---|---|---|---|---|---|---|---|---|
| WEST ABUT. | 61.33 | 57.75 | 66.17 | 62.03 | 0.72 | * 0.20 | 10 | 2 | – | – |
| EAST ABUT. | 61.33 | 57.75 | 66.17 | 62.03 | 0.72 | * 0.20 | – | – | 10 | 2 |

* NO TRANSVERSE MOVEMENT @ ALIGNMENT BEARINGS

| CONTROL SECTION | | JOB NO. | |
|---|---|---|---|
| DES. BY | M. CHEN | CHK. BY | L. LAU |
| DWN. BY | M. P. MARUE | | |
| EST. BY | C. MANJUNATH | CHK. BY | M. CHEN |
| SPECS. BY | B. KARALIUS | | |
| IN CHARGE OF | B. KARALIUS | | |

PARSONS BRINCKERHOFF CADD DATA
OPERATOR marquema
PLOT DATE 01-DEC-2009 14:58
PENTABLE str-full.tbl
DESIGN FILE T:\00404\structs\Bridge 2\br-02.dgn

1 1/2" = 1'-0"
3" = 1'-0"
1' 6" 0 1'
0 3" 6" 9" 12"

| REVISION | BY | CKD. | DATE |
|---|---|---|---|
| | | | |

NEW JERSEY DEPARTMENT OF TRANSPORTATION
BUREAU OF STRUCTURAL ENGINEERING

# ELASTOMERIC BEARINGS

ROUTE 22 LIBERTY AVENUE & CONRAIL BRIDGE
CONTRACT NO. 057009080

HILLSIDE TOWNSHIP MUNICIPALITY — UNION COUNTY

PB AMERICAS, INC.
CERTIFICATION OF AUTHORIZATION NO. 24GA28029800
BRUCE J. KARALIUS
NEW JERSEY PROFESSIONAL ENGINEER LICENSE NO. 26369

SCALE: AS SHOWN

BRIDGE SHEET NO. B87 of B128

194

| STATE | FEDERAL PROJECT NO. | SHEET | TOTAL SHEETS |
|---|---|---|---|
| N.J. | FS-BR-0040 (168) | | |

STRUCTURE NO. 2004-163

ROUTE 22 OVER ACCESS ROAD
(FORMERLY STR. NO. 2004-153)

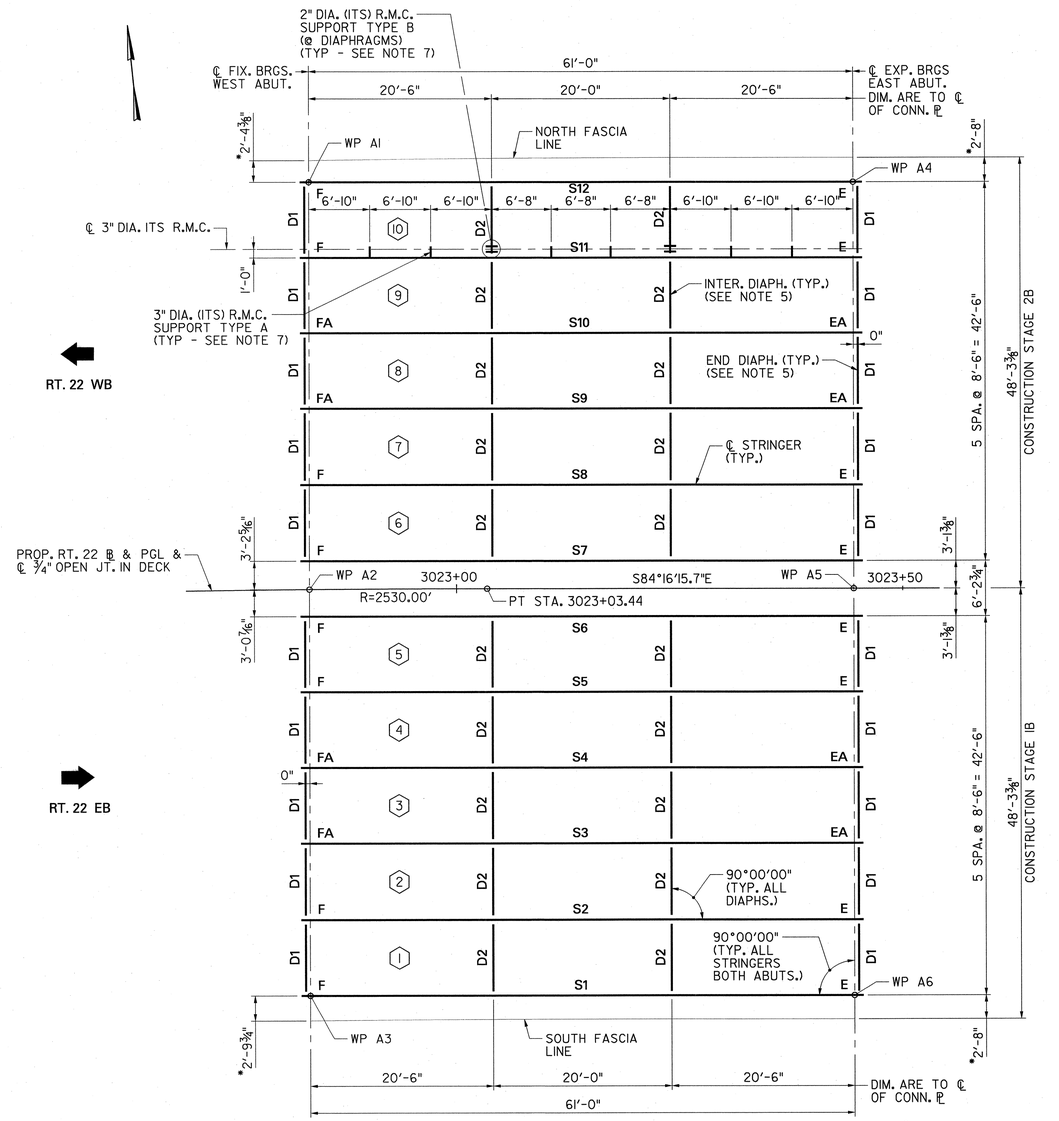


PLAN
⅛" = 1'-0"

## TOP OF STEEL ELEVATIONS

| STRINGER | ℄ BRGS. W. ABUT. | ℄ BRGS. E. ABUT. |
|---|---|---|
| S12 | 89.11 | 91.77 |
| S11 | 89.45 | 92.11 |
| S10 | 89.78 | 92.45 |
| S9 | 89.57 | 92.23 |
| S8 | 89.32 | 91.99 |
| S7 | 89.08 | 91.75 |
| S6 | 88.97 | 91.64 |
| S5 | 88.72 | 91.40 |
| S4 | 88.48 | 91.16 |
| S3 | 88.23 | 90.91 |
| S2 | 87.89 | 90.57 |
| S1 | 87.55 | 90.23 |

TOP OF STEEL ELEVATIONS ARE IN FEET AND ARE AT THE TOP OF TOP FLANGE.

NOTES:

1. FOR GENERAL NOTES, SEE SH. B76.
2. FOR DIAPHRAGM DETAILS, SEE SH. B90.
3. STRINGER LENGTHS ARE MEASURED IN THE HORIZONTAL PLANE, BETWEEN THE CENTERLINE OF BEARINGS.
4. IF THE CONTRACTOR CHOOSES TO ERECT THE STRINGERS ONE AT A TIME, HE SHALL SUBMIT THE NECESSARY DETAILS, TO ENSURE THE LATERAL STABILITY OF THE FIRST STRINGER, TO THE ENGINEER FOR APPROVAL. THE STABILIZING MEASURES SHALL BE MAINTAINED UNTIL AT LEAST TWO STRINGERS IN A SPAN ARE ERECTED AND DIAPHRAGMS ARE CONNECTED.
5. DIAPHRAGMS ARE DEPICTED GRAPHICALLY. THE SPACING SHOWN HERE CORRESPONDS TO THE LOCATION OF THE CENTERLINE OF THE CONNECTION PLATE.
6. FOR WORKING POINT INFORMATION, SEE SH. B75.
7. FOR THE DETAILS OF 3" DIA. ITS - R.M.C. SUPPORTS (TYPE A & TYPE B), SEE SH. B90.

LEGEND:

| | |
|---|---|
| (1) | BAY NUMBER |
| EA | EXP. ALIGN. BRG. |
| FA | FIX. ALIGN. BRG. |
| E | EXP. BRG. |
| F | FIX. BRG. |
| S1 | STRINGER DESIGNATION |
| D1 | DIAPHRAGM DESIGNATION |

## QUANTITIES

| ITEM NO. | DESCRIPTION | UNIT | CONTRACT QUANTITIES STAGE 1B | CONTRACT QUANTITIES STAGE 2B |
|---|---|---|---|---|
| 506003P | STRUCTURAL STEEL | LS | LUMP SUM | LUMP SUM |
| 506012P | SHEAR CONNECTOR | UNIT | 1,450 | 1,450 |
| 701012P | 3" RIGID METALLIC CONDUIT | LF | - | 63 |
| | | | | |

NEW JERSEY DEPARTMENT OF TRANSPORTATION
BUREAU OF STRUCTURAL ENGINEERING

# FRAMING PLAN

ROUTE 22 LIBERTY AVENUE & CONRAIL BRIDGE
CONTRACT NO. 057009080

HILLSIDE TOWNSHIP / MUNICIPALITY — UNION / COUNTY

PB AMERICAS, INC.
CERTIFICATION OF AUTHORIZATION NO. 24GA28029800
BRUCE J. KARALIUS
NEW JERSEY PROFESSIONAL ENGINEER LICENSE NO. 26369

SCALE: AS SHOWN

BRIDGE SHEET NO. B88 of B128

195

| REVISION | BY | CKD. | DATE |
|---|---|---|---|
| | | | |

1/8" = 1'-0"
1'0 2' 4' 8' 16'

| CONTROL SECTION | | JOB NO. | |
|---|---|---|---|
| DES. BY | M. CHEN | CHK. BY | L. LAU |
| DWN. BY | J. BOGNAR | | |
| EST. BY | C. MANJUNATH | CHK. BY | M. CHEN |
| SPECS. BY | B. KARALIUS | | |
| IN CHARGE OF | B. KARALIUS | | |

PARSONS BRINCKERHOFF CADD DATA
OPERATOR marquema
PLOT DATE 01-DEC-2009 14:58
PENTABLE str-full.tbl
DESIGN FILE T:\100404\structure\Bridge_2\fp02.dgn

| STATE | FEDERAL PROJECT NO. | SHEET | TOTAL SHEETS |
|---|---|---|---|
| N.J. | FS-BR-0040 (168) | | |

STRUCTURE NO. 2004-163

ROUTE 22 OVER ACCESS ROAD
(FORMERLY STR. NO. 2004-153)

## STRINGER SCHEDULE

| MARK | SIZE | X | DEAD LOAD DEFLECTIONS | | | | | CAMBER | | | |
|---|---|---|---|---|---|---|---|---|---|---|---|
| | | | LOCATION | STRUCT. STEEL | CONCRETE SLAB & HAUNCHES | STAY IN PLACE FORMS | SDL | TOTAL DEAD LOAD CAMBER | VERTICAL CURVE ORDINATE | ARCH CAMBER | TOTAL CAMBER REQUIRED |
| | IN x LB/FT | IN | | FT | FT | FT | FT | FT | FT | FT | IN |
| S1, S12 | W 30x191 | 13 | MID SPAN | 0.024 | 0.099 | 0.006 | 0.020 | 0.149 | 0.000 | 0.051 | 2 3/8 |
| | | | 1/4 POINT | 0.017 | 0.069 | 0.004 | 0.014 | 0.105 | 0.000 | 0.038 | 1 3/4 |
| S2 – S5, S8 – S11 | W 30x191 | 8 | MID SPAN | 0.025 | 0.106 | 0.010 | 0.019 | 0.160 | 0.000 | 0.051 | 2 1/2 |
| | | | 1/4 POINT | 0.017 | 0.075 | 0.007 | 0.014 | 0.112 | 0.000 | 0.038 | 1 3/4 |
| S6, S7 | W 30x191 | 13 | MID SPAN | 0.024 | 0.103 | 0.005 | 0.020 | 0.152 | 0.000 | 0.051 | 2 3/8 |
| | | | 1/4 POINT | 0.017 | 0.072 | 0.004 | 0.014 | 0.107 | 0.000 | 0.038 | 1 3/4 |

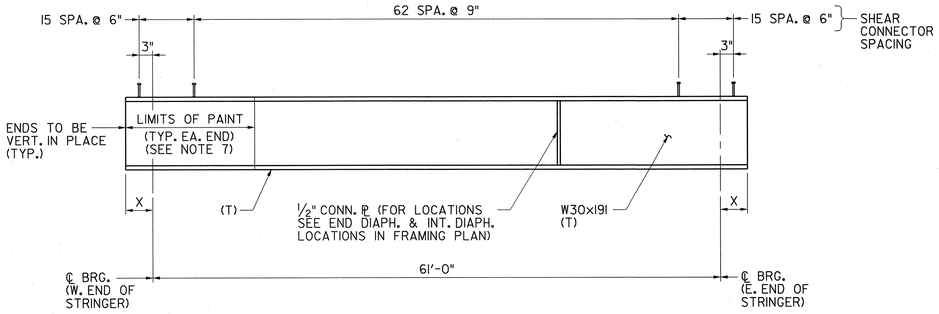


### TYPICAL STRINGER ELEVATION
N.T.S.

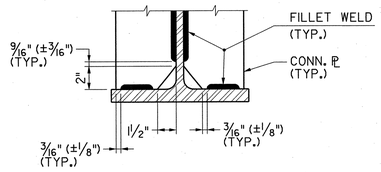


NOTE:
BOTTOM FLANGE SHOWN, TOP FLANGE SIMILAR.

### WELD TERMINATION DETAIL
N.T.S.

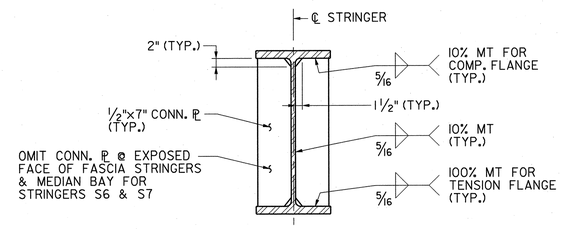


### CONNECTION PLATE DETAIL
N.T.S.

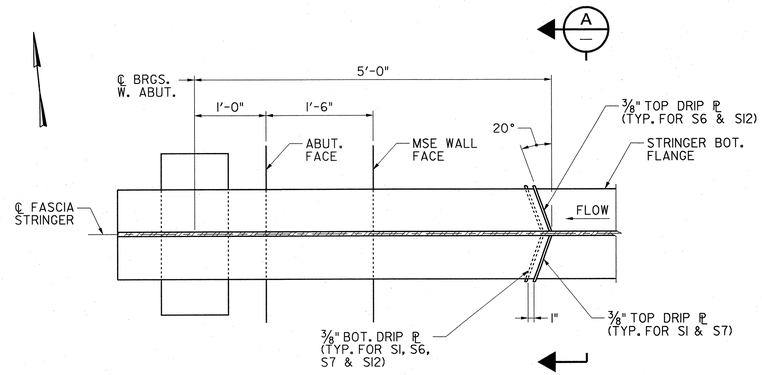


NOTE:
PROVIDE AT W. ABUT. ONLY

### DRIP PLATE PLAN
1" = 1'-0"

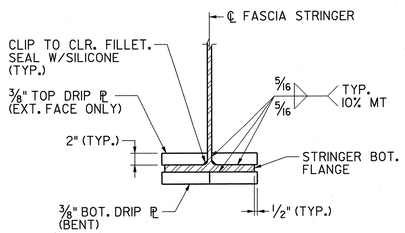


### SECTION A
1" = 1'-0"

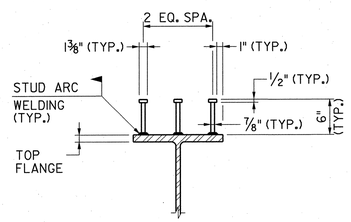


### SHEAR CONNECTOR DETAIL
N.T.S.

NOTES:

1. FOR GENERAL NOTES, SEE SH. B76.
2. WELDING SHALL CONFORM TO THE AASHTO/AWS BRIDGE WELDING CODE D 1.5:2002 WITH NJDOT AMENDMENTS. WELDING AND NONDESTRUCTIVE TESTING SYMBOLS SHALL CONFORM TO "STANDARD SYMBOLS FOR WELDING BRAZING AND NONDESTRUCTIVE EXAMINATION AWS A2.4-98."
3. JOINT WELDING PROCEDURES, OVERALL FABRICATION METHODS, AND QUALITY CONTROL INSPECTION PROCEDURE SHALL BE INCLUDED AS WRITTEN PROCEDURE SPECIFICATIONS WITH THE SHOP PLAN SUBMISSION.

   THE CONTRACTOR SHALL NOTIFY THE ENGINEER AT LEAST 15 DAYS PRIOR TO THE TIME THAT WELDING WILL BE PERFORMED SO THAT A STATE INSPECTOR WILL BE MADE AVAILABLE.
4. UNDER FULL DEAD LOAD, ALL CONNECTION PLATES SHALL BE PLUMB.
5. LENGTH OF STRINGERS FOR DETAILING SHALL BE COMPUTED BY THE CONTRACTOR.
6. ENDS OF ALL STRINGERS SHALL BE GROUND SMOOTH AND PLUMB UNDER FULL DEAD LOAD.
7. ALL STRUCTURAL STEEL, BEAMS, DIAPHRAGMS, CONNECTION PLATES AND BEARINGS FOR A DISTANCE OF THREE TIMES THE DEPTH OF THE STRINGERS FROM THE END OF THE STRINGER SHALL BE CLEANED AND PAINTED AS PER THE STANDARD SPECIFICATIONS. THE COLOR SHALL BE BROWN; THE COATING SYSTEM SHALL BE INORGANIC ZINC. THE COST OF PAINTING STEEL SHALL BE INCLUDED IN PAY ITEM "STRUCTURAL STEEL", FOR ALL STEEL EXCEPT BEARINGS, THE COST OF WHICH IS TO BE INCLUDED IN THE COST OF THE BEARINGS.
8. PRIOR TO FABRICATION THE CONTRACTOR SHALL SUBMIT SHOP DRAWINGS FOR ENGINEER'S APPROVAL.
9. STRUCTURAL STEEL SHALL CONFORM TO AASHTO M270 GRADE 50W (ASTM A709, GRADE 50W). ALL MEMBER COMPONENTS MARKED (T) SHALL COMPLY WITH SUPPLEMENTARY REQUIREMENTS FOR NOTCH TOUGHNESS.
10. THE CONTRACTOR SHALL ADJUST THE SPACING OF THE SHEAR STUDS TO AVOID CONFLICT WITH TRANSVERSE REINFORCING BARS.
11. ALL STRINGER WEBS SHALL BE PLUMB IN THE FINAL POSITION.

CAMBER AND DEFLECTION NOTES:

1. THE TOTAL CAMBER AS TABULATED IS ASSUMED TO BE MEASURED VERTICALLY TO THE TOP OF FULLY CAMBERED BEAM FROM A STRAIGHT LINE DRAWN FROM THE INTERSECTION OF TOP OF BEAM AND CENTERLINE OF BEARINGS AT ONE END OF THE STRINGER TO THE INTERSECTION OF TOP OF BEAM AND CENTERLINE OF BEARINGS AT THE OTHER END OF THE STRINGER.
2. THE DEAD LOAD DEFLECTION LABELED "STRUCTURAL STEEL" IN THE TABLE IS THE DEFLECTION DUE TO THE DEAD LOAD WEIGHT OF STEEL AND DIAPHRAGMS IN THE STRINGER.
3. THE DEAD LOAD DEFLECTION LABELED "CONC. SLAB & HAUNCHES" IN THE TABLE IS THE DEFLECTION DUE TO THE DEAD LOAD WEIGHT OF CONCRETE SLAB AND HAUNCH.
4. THE DEAD LOAD DEFLECTION LABELED "STAY IN PLACE FORMS" IN THE TABLE IS THE DEFLECTION DUE TO THE WEIGHT OF CONCRETE IN THE STAY-IN-PLACE FORMS.
5. THE DEAD LOAD DEFLECTION LABELED "SDL" IN THE TABLE IS THE DEFLECTION DUE TO THE DEAD LOAD WEIGHT OF THE BARRIER CURB, PARAPET, SIDEWALK AND FUTURE WEARING SURFACE.
6. THE CAMBER LABELED "VERTICAL CURVE ORDINATE" IN THE TABLE IS THE CAMBER REQUIRED IN THE STRINGER TO CAUSE THE STRINGER TO FOLLOW THE VERTICAL CURVE.
7. CAMBERS LISTED IN THE TABLE AS POSITIVE ARE UPWARD CAMBERS.
8. THE TOTAL DEAD LOAD CAMBER IS THE CAMBER REQUIRED TO OFFSET THE SUM OF THE DEAD LOAD DEFLECTIONS GIVEN IN THE TABLE.
9. ALL CAMBERS AND DEAD LOAD DEFLECTIONS ARE IN DECIMALS OF A FOOT IN ENGLISH UNITS. EXCEPT FOR TOTAL CAMBER REQUIRED WHICH IS IN INCHES.
10. THE TOTAL DEAD LOAD CAMBER AND TOTAL CAMBER REQUIRED ARE SHOWN ASSUMING THAT STAY-IN-PLACE FORMS ARE USED.
11. THE TOTAL CAMBER REQUIRED USES THE ARCHITECTURAL CAMBER AND NOT THE VERTICAL CURVE ORDINATE.

PARSONS BRINCKERHOFF CADD DATA

| | |
|---|---|
| OPERATOR | maruema |
| PLOT DATE | 01-DEC-2009 14:58 |
| PENTABLE | str-full.tbl |
| DESIGN FILE | T:\00404\struc\Bridge_2\bm02.dgn |

| CONTROL SECTION | | JOB NO. | |
|---|---|---|---|
| DES. BY | M. CHEN | CHK. BY | L. LAU |
| DWN. BY | M. P. MARUE | | |
| EST. BY | C. MANJUNATH | CHK. BY | M. CHEN |
| SPECS. BY | B. KARALIUS | | |
| IN CHARGE OF | B. KARALIUS | | |

1" = 1'-0"
1' 6" 0 1' 2'

| REVISION | BY | CKD. | DATE |
|---|---|---|---|
| | | | |

NEW JERSEY DEPARTMENT OF TRANSPORTATION
BUREAU OF STRUCTURAL ENGINEERING

# STRINGER DETAILS

ROUTE 22 LIBERTY AVENUE & CONRAIL BRIDGE
CONTRACT NO. 057009080

HILLSIDE TOWNSHIP
MUNICIPALITY

UNION
COUNTY

PB AMERICAS, INC.
CERTIFICATION OF AUTHORIZATION NO. 24GA28029800

BRUCE J. KARALIUS
NEW JERSEY PROFESSIONAL ENGINEER LICENSE NO. 26369

SCALE: AS SHOWN

BRIDGE SHEET NO. B89 of B128

196

| STATE | FEDERAL PROJECT NO. | SHEET | TOTAL SHEETS |
|---|---|---|---|
| N.J. | FS-BR-0040 (168) | | |

STRUCTURE NO. 2004-163

ROUTE 22 OVER ACCESS ROAD
(FORMERLY STR. NO. 2004-153)

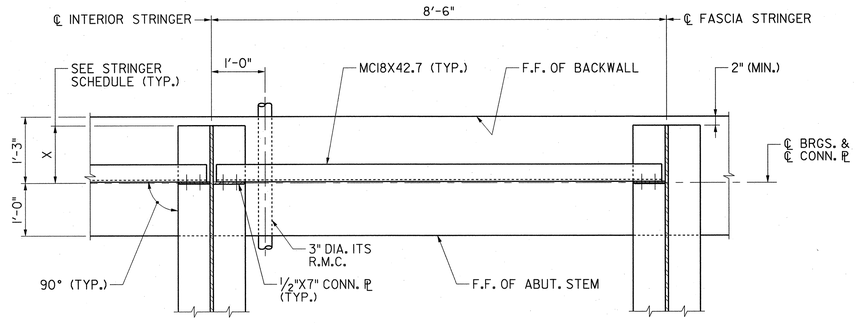


## PLAN – END DIAPHRAGM AT ABUTMENT (D1)

¾" = 1'-0"

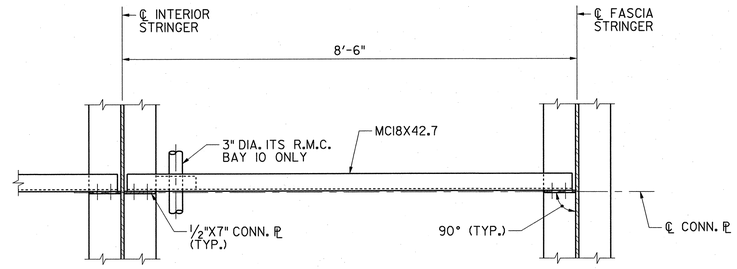


## PLAN – INTERMEDIATE DIAPHRAGM (D2)

¾" = 1'-0"

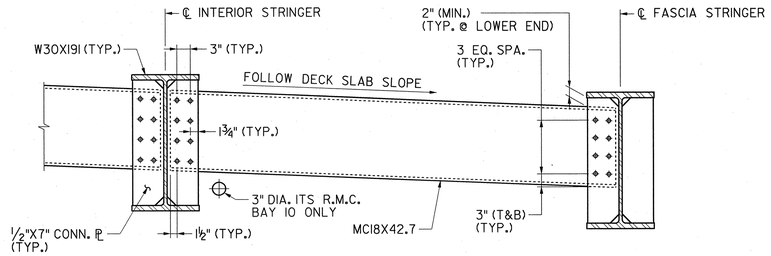


## ELEVATION – TYPICAL END DIAPHRAGM (D1)

(WB NORTHSIDE FASCIA BAY SHOWN, LOOKING WEST)
(EB LOOKING EAST – SIMILAR)
¾" = 1'-0"

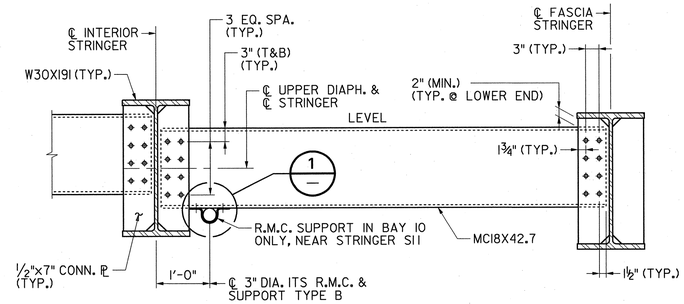


## ELEVATION – INTERMEDIATE DIAPHRAGM (D2)

(WB NORTHSIDE FASCIA BAY SHOWN, LOOKING WEST)
(EB LOOKING EAST – SIMILAR)
¾" = 1'-0"

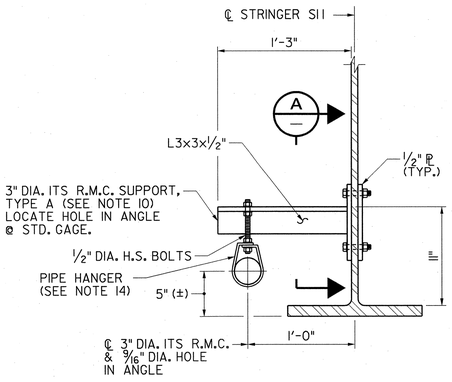


## 3" DIA. ITS R.M.C. SUPPORT, TYPE A

(LOOKING EAST)
1½" = 1'-0"

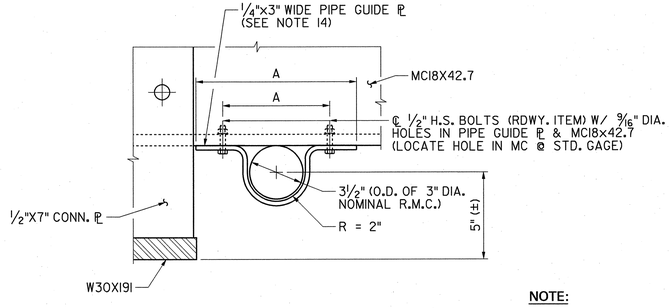


DETAIL 1 — 3" DIA. ITS R.M.C. SUPPORT, TYPE B
3" = 1'-0"

**NOTE:**
DIMENSION 'A' VARIES BASED ON MANUFACTURE

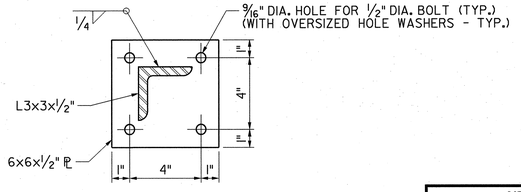


SECTION A — —
3" = 1'-0"

**NOTES:**

1. TOP FLANGES OF STRINGERS ARE NOT SHOWN IN PLAN VIEWS, FOR CLARITY.
2. FOR DIAPHRAGM LOCATIONS, SEE FRAMING PLAN.
3. STRUCTURAL STEEL SHALL BE AASHTO M270 GRADE 50W (ASTM A709/A709M GRADE 50W).
4. FOR PAINTING REQUIREMENTS, SEE SH. B89, NOTE 7.
5. ALL BOLTS SHALL BE ⅞" DIA. (EXCEPT AS NOTED) AND SHALL CONFORM TO ASTM A325, TYPE 3.
6. CONTACT SURFACES SHALL CONFORM TO REQUIREMENTS FOR AASHTO CLASS A SLIP CRITICAL CONNECTIONS.
7. ALL HOLES IN DIAPHRAGMS SHALL BE 15/16" DIA. ALL HOLES IN CONNECTION PLATES SHALL BE 1 1/16" DIA. HARDENED WASHERS SHALL BE PROVIDED FOR OVERSIZED HOLES.
8. UNLESS OTHERWISE NOTED, FOR ⅞" H.S. BOLTS, MIN. SPACING IS 3" AND MIN. EDGE DISTANCE IS 1¾".
9. ALL CONNECTIONS SHALL BE FRICTION-TYPE CONNECTIONS WITH THREADS EXCLUDED FROM SHEAR PLANE.
10. FOR SPACING OF 3" DIA. ITS R.M.C. SUPPORTS SEE FRAMING PLAN SH. B86.
11. ½" DIA. BOLTS SHALL CONFORM TO ASTM A325, TYPE 3.
12. EXPANSION SLEEVES FOR 3 " DIA. ITS R.M.C. SHALL BE PROVIDED NEAR THE ABUTMENTS. COST TO BE INCLUDED IN THE COST OF THE CONDUIT.
13. STRUCTURAL STEEL FOR ITS SUPPORT IS TO BE AASHTO M270 GRADE 50W (ASTM A709 GRADE 50W). BOLTS ARE TO BE ASTM A325, TYPE 3. PAINTING REQUIREMENTS STIPULATED IN NOTE 7 ON SH. B89 SHALL APPLY. THE COST IS TO BE INCLUDED IN THE COST OF THE STRUCTURAL STEEL.
14. PIPE GUIDES AND PIPE HANGERS TO BE HOT DIP GALVANIZED CARBON STEEL. PIPE HANGER TO BE STANDARD-DUTY, B3100 AS MANUFACTURED BY COOPER B-LINE OR APPROVED EQUAL. COST TO BE INCLUDED IN COST OF THE CONDUIT.

PARSONS BRINCKERHOFF CADD DATA

| | |
|---|---|
| OPERATOR | marquema |
| PLOT DATE | 01-DEC-2009 14:58 |
| PENTABLE | str-full.tbl |
| DESIGN FILE | T:\00404\str\uc\Bridge_2\dd02.dgn |

| CONTROL SECTION | | JOB NO. | |
|---|---|---|---|
| DES. BY | M. CHEN | CHK. BY | L. LAU |
| DWN. BY | M. P. MARUE | | |
| EST. BY | C. MANJUNATH | CHK. BY | M. CHEN |
| SPECS. BY | B. KARALIUS | | |
| IN CHARGE OF | B. KARALIUS | | |

3" = 1'-0" 0 3" 6" 9" 12"
1" = 1'-0" 1' 6" 0 1' 2'
3/4" = 1'-0" 1' 0 1' 2' 4'

| REVISION | BY | CKD. | DATE |
|---|---|---|---|
| | | | |

NEW JERSEY DEPARTMENT OF TRANSPORTATION
BUREAU OF STRUCTURAL ENGINEERING

# STEEL DIAPHRAGM AND UTILITY SUPPORT DETAILS

ROUTE 22 LIBERTY AVENUE & CONRAIL BRIDGE
CONTRACT NO. 057009080

HILLSIDE TOWNSHIP MUNICIPALITY — UNION COUNTY

PB AMERICAS, INC.
CERTIFICATION OF AUTHORIZATION NO. 24GA28029800
BRUCE J. KARALIUS
NEW JERSEY PROFESSIONAL ENGINEER LICENSE NO. 26369

SCALE: AS SHOWN

BRIDGE SHEET NO. B90 of B128

197

| STATE | FEDERAL PROJECT NO. | SHEET | TOTAL SHEETS |
|---|---|---|---|
| N.J. | FS-BR-0040 (168) | | |

STRUCTURE NO. 2004-163

ROUTE 22 OVER ACCESS ROAD
(FORMERLY STR. NO. 2004-153)

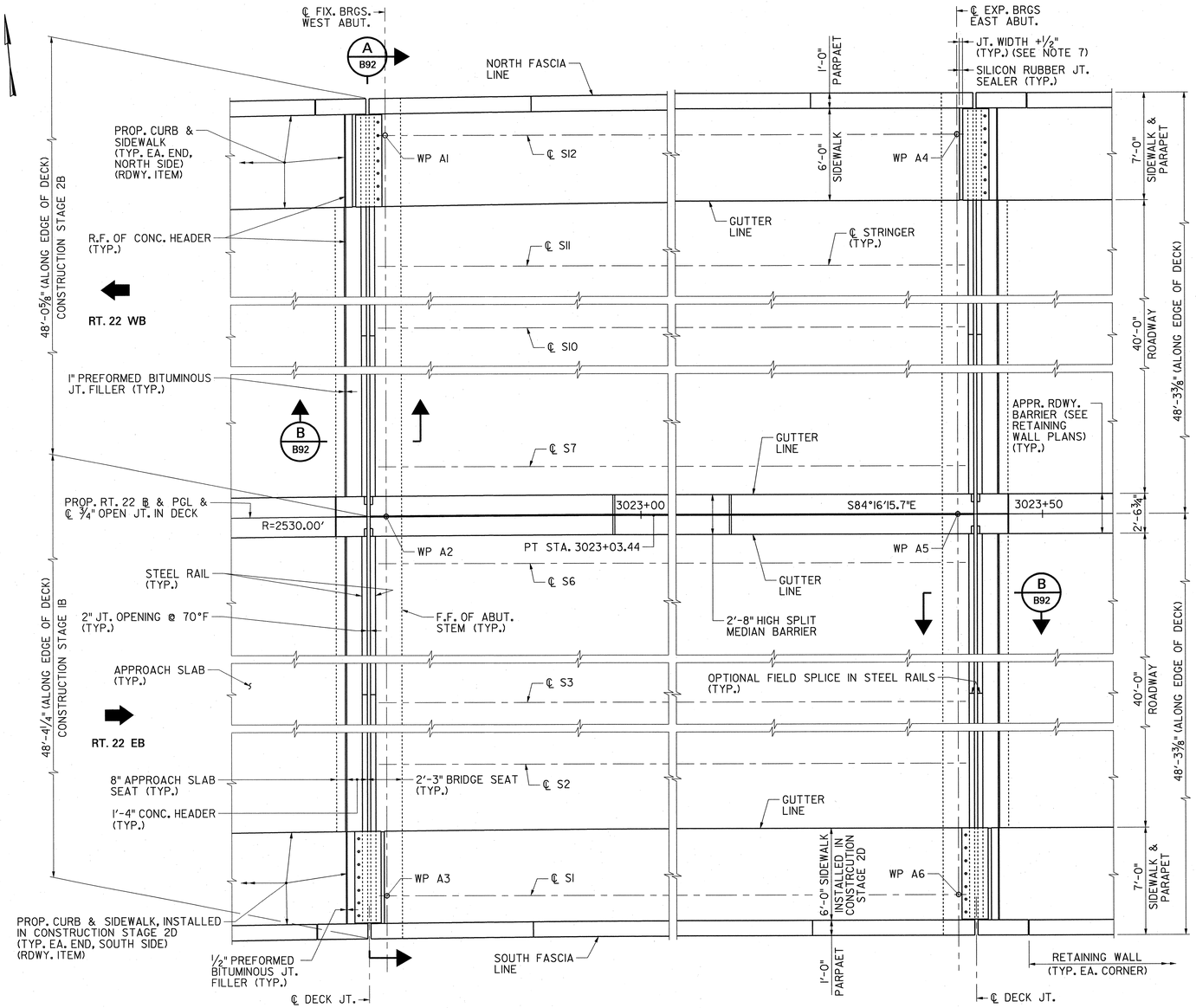


PLAN
1/4" = 1'-0"

**NOTES:**

1. ALL BOLTS SHALL CONFORM TO AASHTO M164 (ASTM A325) WITH SUITABLE NUTS AND WASHERS. ALL SHALL BE HOT DIP GALAVANIZED.
2. CONTRACTOR SHALL CUT AND GROOVE WELD SECTIONS OF DECK JOINTS IN THE SHOP AS REQUIRED TO MATCH ROADWAY GEOMETRY. EXPOSED WELDED SURFACES SHALL BE GROUND SMOOTH BEFORE GALVANIZING. NO BENDING OF STEEL PARTS WILL BE ALLOWED IN THE FIELD.
3. DECK JOINTS AT OPTIONAL FIELD SPLICE SHALL BE FIELD WELDED (FULL PENETRATION) IN ACCORDANCE WITH AWS STANDARDS AND AS APPROVED BY THE ENGINEER. AFTER GRINDING, ALL DAMAGED GALVANIZED PARTS SHALL BE REPAIRED AS PER SPECIFICATIONS SUBSECTION 506.03.06. DETAILS OF THE FIELD SPLICE SHALL BE SUBMITTED TO THE ENGINEER FOR APPROVAL.
4. JOINT STEEL SHALL BE ASSEMBLED IN THE SHOP. SHIPPING ACCESSORIES SHALL BE REMOVED AFTER JOINT ASSEMBLY IS SEATED.
5. STRIP SEAL SHALL HAVE A TOTAL MOVEMENT RATING OF 4" AT EACH ABUTMENT.
6. TOP OF DECK JOINT SHALL MATCH TOP OF ROADWAY, WITH REGARD TO BOTH CROSS SLOPES AND ROADWAY PROFILE.
7. RECESS OF SIDEWALKS SHALL BE PLACED AT THE TRAILING END OF TRAFFIC.
8. FOR OTHER STRIP SEAL DECK JOINT DETAILS AND INFORMATION, SEE NJDOT STANDARD BRIDGE CONSTRUCTION DETAIL BCD-507-1.

## QUANTITIES

| ITEM NO. | DESCRIPTION | UNIT | CONTRACT QUANTITIES STAGE 1B | CONTRACT QUANTITIES STAGE 2B |
|---|---|---|---|---|
| 507015P | STRIP SEAL EXPANSION JOINT ASSEMBLY | LF | 100 | 100 |
| | | | | |

STAGE 2D QUANTITIES ARE INCLUDED IN STAGE 1B

PARSONS BRINCKERHOFF CADD DATA
OPERATOR marquema
PLOT DATE 01-DEC-2009 14:58
PENTABLE str-full.tbl
DESIGN FILE T:\00404\struc\Bridge 2\d102.dgn

| CONTROL SECTION | | JOB NO. | |
|---|---|---|---|
| DES. BY | J. BOGNAR | CHK. BY | L. LAU |
| DWN. BY | J. BOGNAR | | |
| EST. BY | C. MANJUNATH | CHK. BY | M. CHEN |
| SPECS. BY | B. KARALIUS | | |
| IN CHARGE OF | B. KARALIUS | | |

1/8" = 1'-0"
1'0 2' 4' 8' 16'

| REVISION | BY | CKD. | DATE |
|---|---|---|---|
| | | | |

NEW JERSEY DEPARTMENT OF TRANSPORTATION
BUREAU OF STRUCTURAL ENGINEERING

# DECK JOINT PLAN

ROUTE 22 LIBERTY AVENUE & CONRAIL BRIDGE
CONTRACT NO. 057009080

HILLSIDE TOWNSHIP MUNICIPALITY — UNION COUNTY

PB AMERICAS, INC.
CERTIFICATION OF AUTHORIZATION NO. 24GA28029800
BRUCE J. KARALIUS
NEW JERSEY PROFESSIONAL ENGINEER LICENSE NO. 26369

SCALE: AS SHOWN

BRIDGE SHEET NO. B91 of B128

198

| STATE | FEDERAL PROJECT NO. | SHEET | TOTAL SHEETS |
|---|---|---|---|
| N.J. | FS-BR-0040 (168) | | |

STRUCTURE NO. 2004-163

ROUTE 22 OVER ACCESS ROAD
(FORMERLY STR. NO. 2004-153)

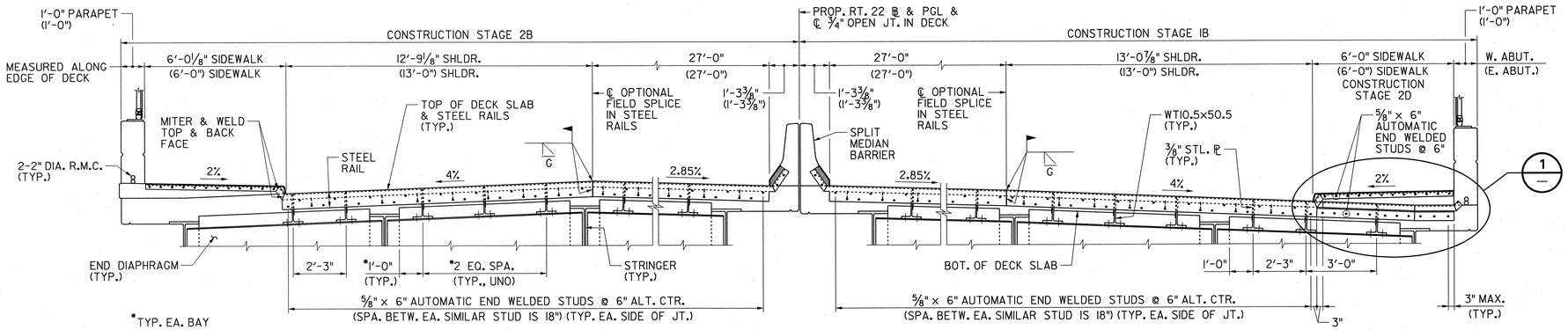


SECTION A B91 (⅜" = 1'-0") — AT WEST ABUT. (SHOWN, LOOKING EAST)
AT EAST ABUT. (SIMILAR, LOOKING EAST)

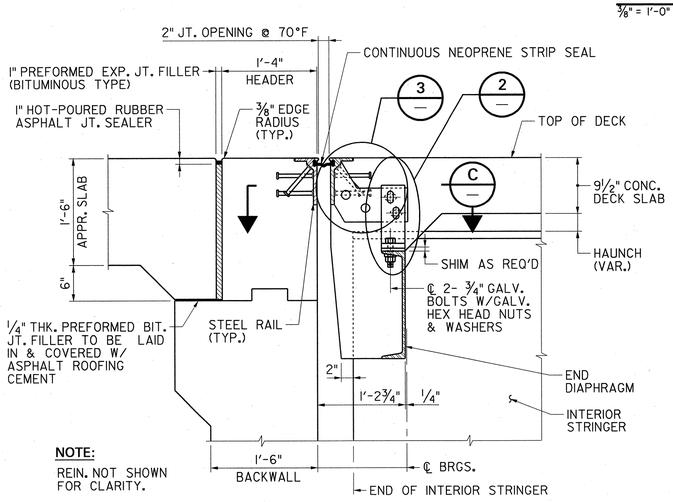


NOTE:
REIN. NOT SHOWN FOR CLARITY.

SECTION B B91 (1" = 1'-0")

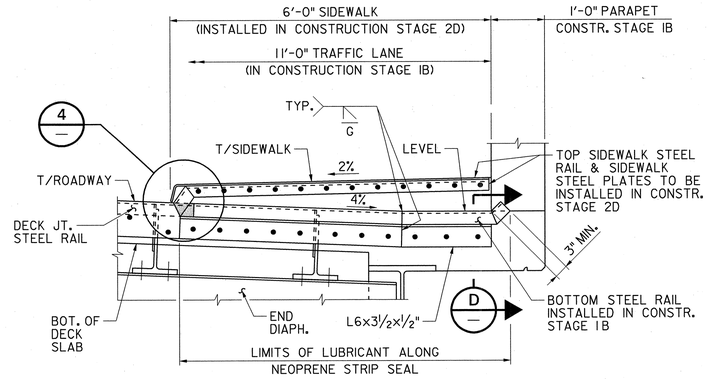


DETAIL 1 (¾" = 1'-0")

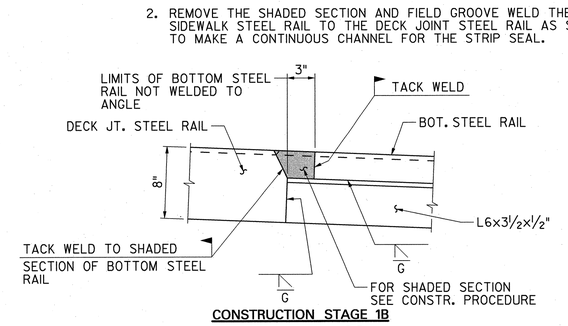


CONSTRUCTION STAGE 1B

DETAIL 4 (1½" = 1'-0")

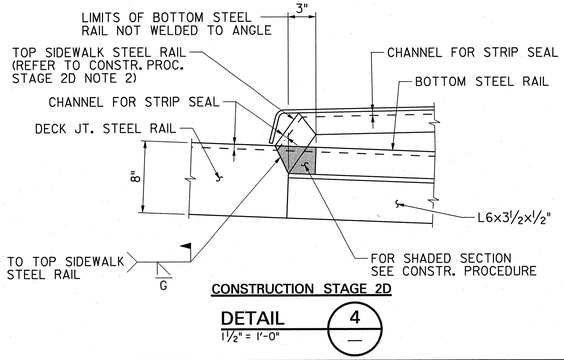


CONSTRUCTION STAGE 2D

DETAIL 4 (1½" = 1'-0")

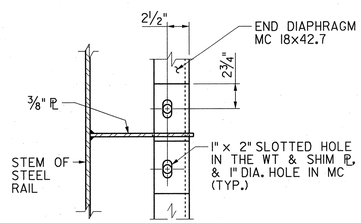


SECTION C (1½" = 1'-0")

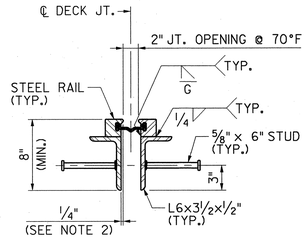


SECTION D (1½" = 1'-0")

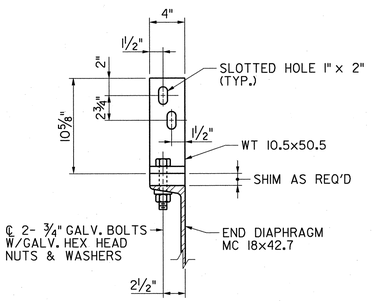


DETAIL 2 (1½" = 1'-0")

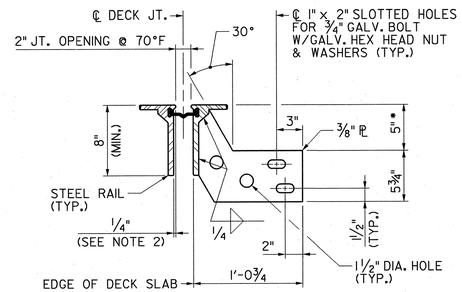


NOTE:
STUDS NOT SHOWN FOR CLARITY.

DETAIL 3 (1½" = 1'-0")

* CONTRACTOR TO VERIFY THIS DIMENSION BASED ON ACTUAL VERTICAL LOCATION OF END DIAPHRAGM.

**NOTES:**

1. WORK THIS SHEET WITH SH. B91.
2. THIS DIMENSION VARIES PER MANUFACTURER. THE CONTRACTOR SHALL MAKE ALL NECESSARY ADJUSTMENTS TO ALL ASSOCIATED BRIDGE COMPONENTS BASED ON ACTUAL DIMENSIONS.
3. SEPARATE PAYMENT WILL NOT BE MADE FOR INSTALLING THE DECK JOINT IN TWO STAGES AT THE SOUTH SIDEWALK. THE COST IS TO BE INCLUDED IN THE COST OF THE STRIP SEAL JOINT ASSEMBLY.

**CONSTRUCTION PROCEDURE:**

**CONSTRUCTION STAGE 1B**

1. PRE-CUT THE SHADED SECTION AND TACK WELD BOTH ENDS OF THE SECTION DURING CONSTRUCTION STAGE 1B. THIS SECTION WILL BE REMOVED IN STAGE 2D.
2. GROOVE WELD THE BOTTOM STEEL RAIL, EXCEPT THE SHADED SECTION, TO L6x3½x½".
3. INSTALL STRIP SEAL.

**CONSTRUCTION STAGE 2D**

1. PRIOR TO INSTALLING THE TOP SIDEWALK STEEL RAIL, CAREFULLY REMOVE THE STRIP SEAL FROM THE RAIL CHANNELS TO THE POINT WHERE LUBRICANT WAS APPLIED.
2. REMOVE THE SHADED SECTION AND FIELD GROOVE WELD THE TOP SIDEWALK STEEL RAIL TO THE DECK JOINT STEEL RAIL AS SHOWN TO MAKE A CONTINUOUS CHANNEL FOR THE STRIP SEAL.

| CONTROL SECTION | | JOB NO. | |
|---|---|---|---|
| DES. BY | J. BOGNAR | CHK. BY | L. LAU |
| DWN. BY | J. BOGNAR | | |
| EST. BY | C. MANJUNATH | CHK. BY | M. CHEN |
| SPECS. BY | B. KARALIUS | | |
| IN CHARGE OF | B. KARALIUS | | |

PARSONS BRINCKERHOFF CADD DATA
OPERATOR marquema
PLOT DATE 01-DEC-2009 14:58
PENTABLE str-full.tbl
DESIGN FILE T:\00404\struc\Bridge_2\d02_b.dgn

3/8" = 1'-0" (1' 0 2' 4' 8')
3/4" = 1'-0" (1' 0 1' 2' 4')
1" = 1'-0" (1' 6" 0 1' 2')
1 1/2" = 1'-0" (1' 6" 0 1')

| REVISION | BY | CKD. | DATE |
|---|---|---|---|
| | | | |

NEW JERSEY DEPARTMENT OF TRANSPORTATION
BUREAU OF STRUCTURAL ENGINEERING

# DECK JOINT SECTIONS AND DETAILS

ROUTE 22 LIBERTY AVENUE & CONRAIL BRIDGE
CONTRACT NO. 057009080

HILLSIDE TOWNSHIP MUNICIPALITY — UNION COUNTY

PB AMERICAS, INC.
CERTIFICATION OF AUTHORIZATION NO. 24GA28029800
BRUCE J. KARALIUS
NEW JERSEY PROFESSIONAL ENGINEER LICENSE NO. 26389

SCALE: AS SHOWN

BRIDGE SHEET NO. B92 of B128

199

| STATE | FEDERAL PROJECT NO. | SHEET | TOTAL SHEETS |
|---|---|---|---|
| N.J. | FS-BR-0040 (168) | | |

STRUCTURE NO. 2004-163

ROUTE 22 OVER ACCESS ROAD
(FORMERLY STR. NO. 2004-153)

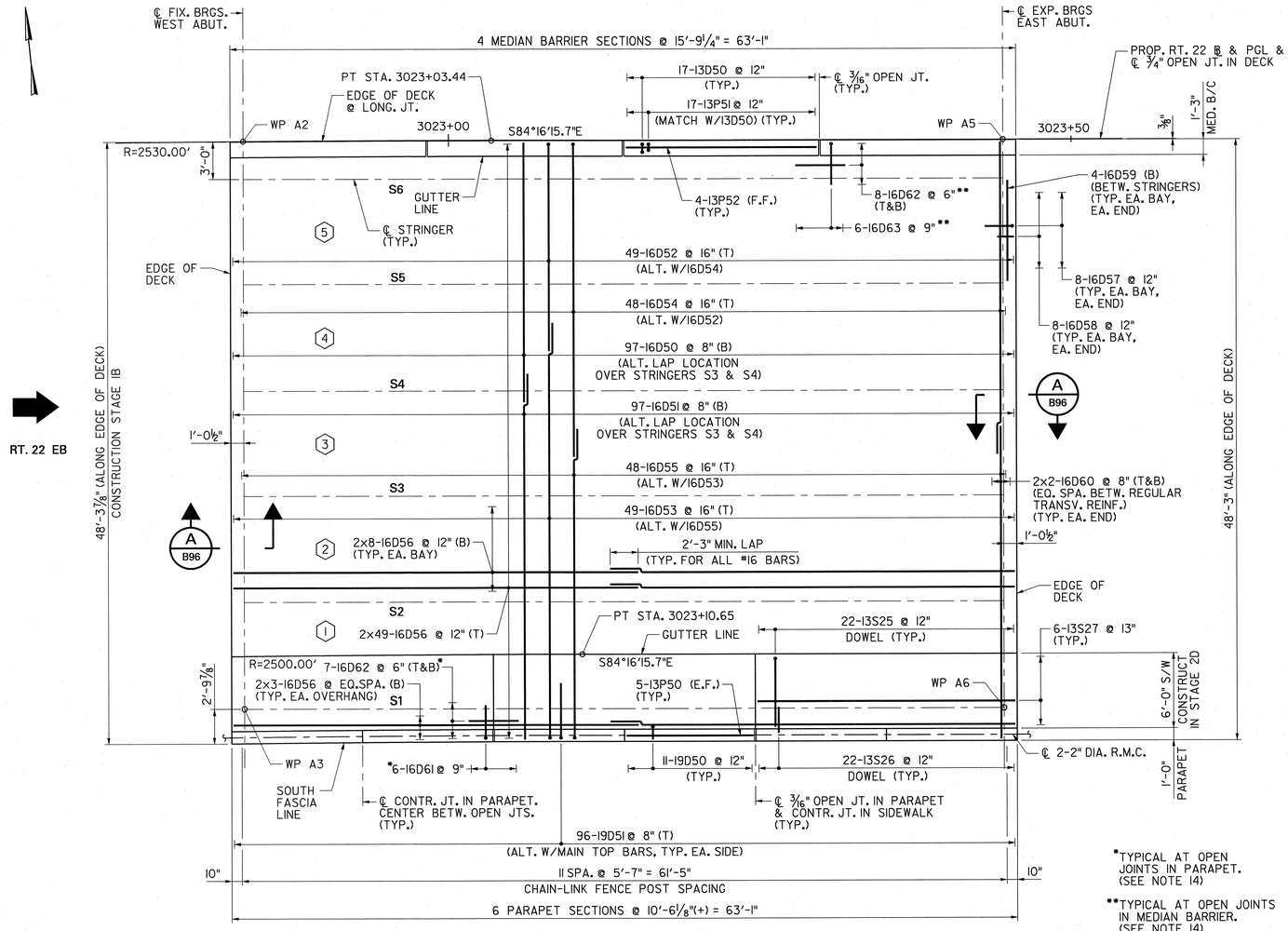


PLAN
3/16" = 1'-0"

*TYPICAL AT OPEN JOINTS IN PARAPET. (SEE NOTE 14)

**TYPICAL AT OPEN JOINTS IN MEDIAN BARRIER. (SEE NOTE 14)

**NOTES:**

1. WORK THIS SHEET WITH SH. B94.
2. DIAPHRAGMS ARE NOT SHOWN FOR CLARITY.
3. FOR WORKING POINTS DATA, SEE SH. B75.
4. DECK SLAB SHALL BE MACHINE FINISHED AND SAWCUT GROOVED. FOR DECK SLAB SAWCUT GROOVING DETAILS, SEE NJDOT STANDARD BRIDGE CONSTRUCTION DETAILS SHEET BCD-507-3. THE DECK SLAB, IN THE AREA DIRECTLY UNDER WHERE THE SIDEWALK IN STAGE 2D IS TO BE PLACED, SHALL NOT BE SAWCUT.
5. FOR TOP OF DECK ELEVATIONS, SEE SH. B98.
6. REINFORCEMENT SPACING SHALL BE ADJUSTED AS REQUIRED TO AVOID THE SHEAR CONNECTORS, DECK JOINTS STUDS AND WT SECTIONS ATTACHED TO THE TOP OF END DIAPHRAGMS.
7. IF S-I-P FORMS ARE USED THE SPACING (PITCH) OF THE RIBS (FLUTES) SHALL MATCH THE SPACING OF THE BOTTOM MAIN REINFORCEMENT STEEL.
8. PAYMENT FOR 2'-8" PARAPET IS TO BE MADE UNDER THE PAY ITEM. "CONCRETE BRIDGE PARAPET HPC." PAYMENT FOR 1'-3" MEDIAN BARRIER CURB IS TO BE MADE UNDER PAY ITEM, "15"x32" CONCRETE BARRIER CURB, BRIDGE, HPC." PAYMENT FOR SIDEWALK IS TO BE MADE UNDER PAY ITEM "CONCRETE BRIDGE SIDEWALK, HPC".
9. THE CONTRACTOR IS TO BE AWARE THAT THE EDGE OF DECK SLAB DOES NOT OCCUR AT THE SAME LOCATION AS THE EDGE OF DECK JOINT RAIL, TO WHICH THE DECK OPENING IS MEASURED. SEE SH. B92.
10. FOR R.M.C. EXPANSION FITTING DETAILS, SEE SH. B97.
11. FOR CURVED TOP CHAIN-LINK FENCE DETAILS, SEE NJDOT STANDARD BRIDGE CONSTRUCTION DETAILS DRAWING BCD-509-1. THE CHAIN-LINK FENCE, INCLUDING FABRIC, POSTS, TENSIONERS, FASTENERS, SUPPORTS AND ANY MISCELLANEOUS HARDWARE SHALL BE BROWN VINYL CLAD.
12. LENGTH OF DECK IS BASED ON A DECK JOINT OPENING OF 2" AT 70°F.
13. NO STAY-IN-PLACE FORM IS PERMITTED IN THE FASCIA OVERHANG AREAS.
14. FOR DETAILS OF ADDITIONAL REINFORCEMENT AT PARAPET AND MEDIAN BARRIER OPEN JOINTS, SEE NJDOT STANDARD BRIDGE CONSTRUCTION DETAILS SHEET BCD-507-2.

**QUANTITIES**

| ITEM NO. | DESCRIPTION | UNIT | CONTRACT QUANTITIES |
|---|---|---|---|
| 504006P | REINFORCEMENT STEEL, EPOXY COATED | LB | 22,200 |
| 507024P | CONCRETE BRIDGE DECK, HPC | CY | 103 |
| 507027M | DATE PANEL | UNIT | 1 |
| 507033P | CONCRETE BRIDGE SIDEWALK, HPC | CY | 11 |
| 507039P | CONCRETE BRIDGE PARAPET, HPC | LF | 63 |
| 507045P | 15" BY 32" CONCRETE BARRIER CURB, BRIDGE, HPC | LF | 63 |
| 509084P | CHAIN-LINK FENCE, PVC-COATED STEEL, BRIDGE, 6'-3" HIGH CURVED TOP | LF | 63 |
| 701015P | 2" RIGID METALLIC CONDUIT | LF | 126 |
| | | | |
| | | | |

**LEGEND:**

⟨1⟩ BAY NUMBER

S1 STRINGER DESIGNATION

3/16" = 1'-0"
1' 0 2' 4' 8' 16'

| REVISION | BY | CKD. | DATE |
|---|---|---|---|
| | | | |
| | | | |
| | | | |

NEW JERSEY DEPARTMENT OF TRANSPORTATION
BUREAU OF STRUCTURAL ENGINEERING

# EASTBOUND DECK SLAB PLAN

ROUTE 22 LIBERTY AVENUE & CONRAIL BRIDGE
CONTRACT NO. 057009080

HILLSIDE TOWNSHIP MUNICIPALITY — UNION COUNTY

PB AMERICAS, INC.
CERTIFICATION OF AUTHORIZATION NO. 24GA28029800
BRUCE J. KARALIUS
NEW JERSEY PROFESSIONAL ENGINEER LICENSE NO. 26369

SCALE: AS SHOWN

BRIDGE SHEET NO. B93 of B128

200

| CONTROL SECTION | | JOB NO. | |
|---|---|---|---|
| DES. BY | M. CHEN | CHK. BY | L. LAU |
| DWN. BY | J. BOGNAR | | |
| EST. BY | C. MANJUNATH | CHK. BY | M. CHEN |
| SPECS. BY | B. KARALIUS | | |
| IN CHARGE OF | B. KARALIUS | | |

PARSONS BRINCKERHOFF CADD DATA
OPERATOR marudma
PLOT DATE 01-DEC-2009 14:58
PENTABLE str-full.tbl
DESIGN FILE T:\00404\struc\Bridge_2\dp02_b.dgn

| STATE | FEDERAL PROJECT NO. | SHEET | TOTAL SHEETS |
|---|---|---|---|
| N.J. | FS-BR-0040 (168) | | |

STRUCTURE NO. 2004-163

ROUTE 22 OVER ACCESS ROAD
(FORMERLY STR. NO. 2004-153)

**NOTE:**
WORK THIS SHEET WITH SH. B93.

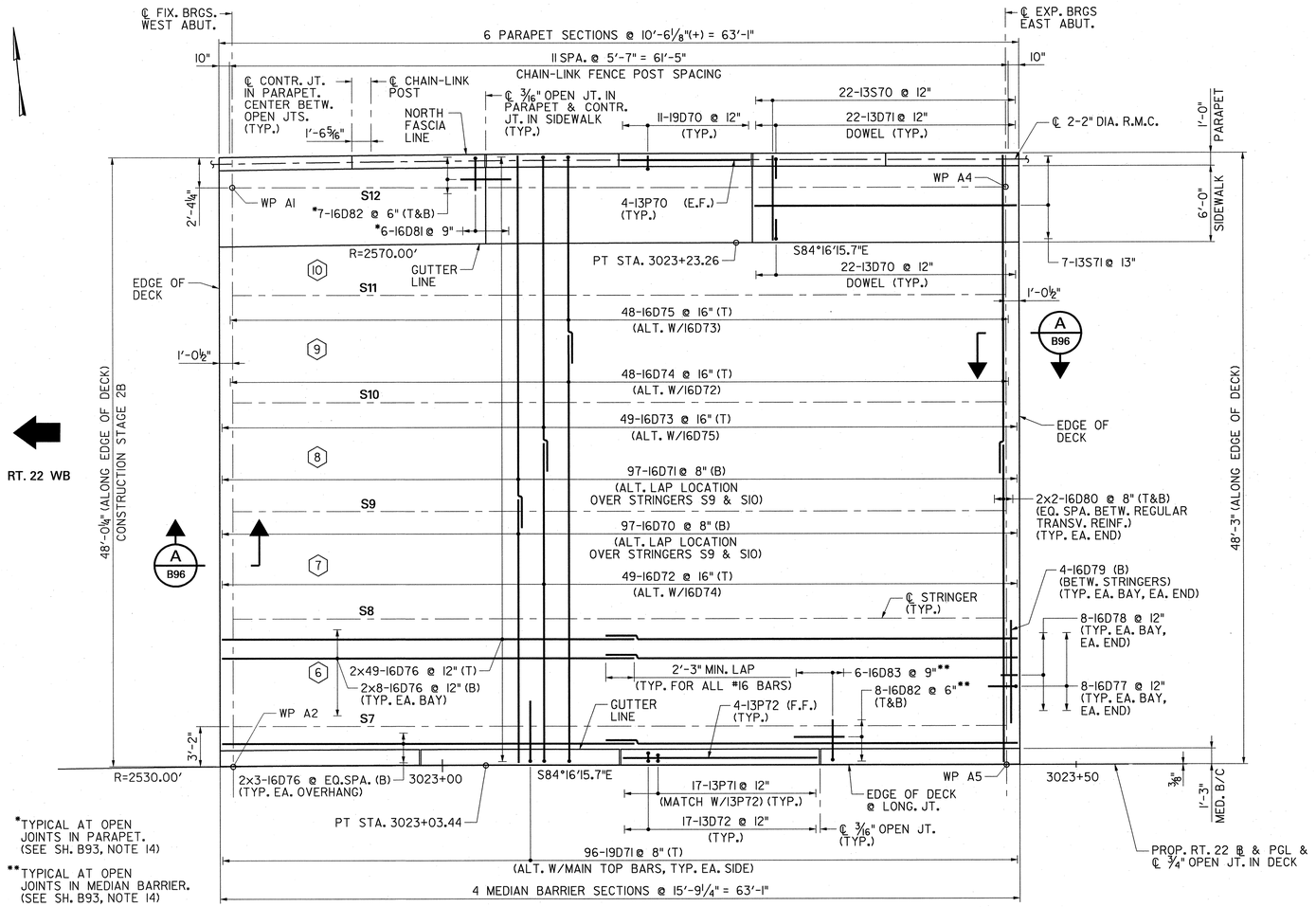


*TYPICAL AT OPEN JOINTS IN PARAPET. (SEE SH. B93, NOTE 14)

**TYPICAL AT OPEN JOINTS IN MEDIAN BARRIER. (SEE SH. B93, NOTE 14)

## PLAN
3/16" = 1'-0"

**LEGEND:**

(6) BAY NUMBER

S7 STRINGER DESIGNATION

## QUANTITIES

| ITEM NO. | DESCRIPTION | UNIT | CONTRACT QUANTITIES |
|---|---|---|---|
| 504006P | REINFORCEMENT STEEL, EPOXY COATED | LB | 22,800 |
| 507024P | CONCRETE BRIDGE DECK, HPC | CY | 103 |
| 507027M | DATE PANEL | UNIT | 1 |
| 507033P | CONCRETE BRIDGE SIDEWALK, HPC | CY | 11 |
| 507039P | CONCRETE BRIDGE PARAPET, HPC | LF | 63 |
| 507045P | 15" BY 32" CONCRETE BARRIER CURB, BRIDGE, HPC | LF | 63 |
| 509084P | CHAIN-LINK FENCE, PVC-COATED STEEL, BRIDGE, 6'-3" | LF | 63 |
| | HIGH CURVED TOP | | |
| 701015P | 2" RIGID METALLIC CONDUIT | LF | 126 |
| | | | |
| | | | |

PARSONS BRINCKERHOFF CADD DATA
OPERATOR marquema
PLOT DATE 01-DEC-2009 14:58
PENTABLE str-full.tbl
DESIGN FILE T:\00404\struc\Bridge 2\dp02_a.dgn

| CONTROL SECTION | | JOB NO. | |
|---|---|---|---|
| DES. BY | M. CHEN | CHK. BY | L. LAU |
| DWN. BY | J. BOGNAR | | |
| EST. BY | C. MANJUNATH | CHK. BY | M. CHEN |
| SPECS. BY | B. KARALIUS | | |
| IN CHARGE OF | B. KARALIUS | | |

3/16" = 1'-0"
1' 0 2' 4' 8' 16'

| REVISION | BY | CKD. | DATE |
|---|---|---|---|
| | | | |
| | | | |
| | | | |
| | | | |

NEW JERSEY DEPARTMENT OF TRANSPORTATION
BUREAU OF STRUCTURAL ENGINEERING

# WESTBOUND DECK SLAB PLAN

ROUTE 22 LIBERTY AVENUE & CONRAIL BRIDGE
CONTRACT NO. 057009080

HILLSIDE TOWNSHIP MUNICIPALITY — UNION COUNTY

PB AMERICAS, INC.
CERTIFICATION OF AUTHORIZATION NO. 24GA28029800
BRUCE J. KARALIUS
NEW JERSEY PROFESSIONAL ENGINEER LICENSE NO. 26369

SCALE: AS SHOWN

BRIDGE SHEET NO. B94 of B128

201

| STATE | FEDERAL PROJECT NO. | SHEET | TOTAL SHEETS |
|---|---|---|---|
| N.J. | FS-BR-0040 (168) | | |

STRUCTURE NO. 2004-163

ROUTE 22 OVER ACCESS ROAD
(FORMERLY STR. NO. 2004-153)

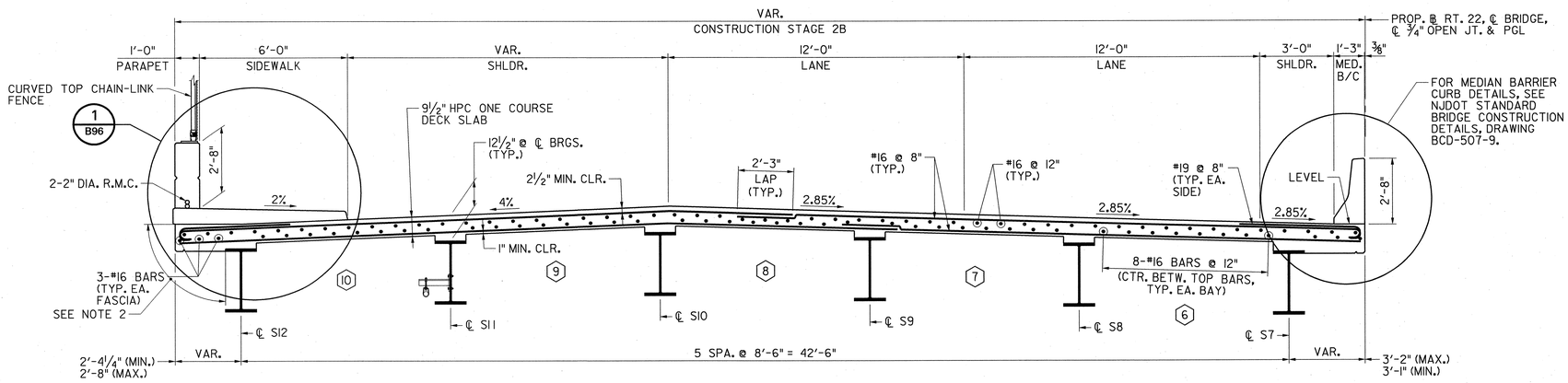


**WESTBOUND**

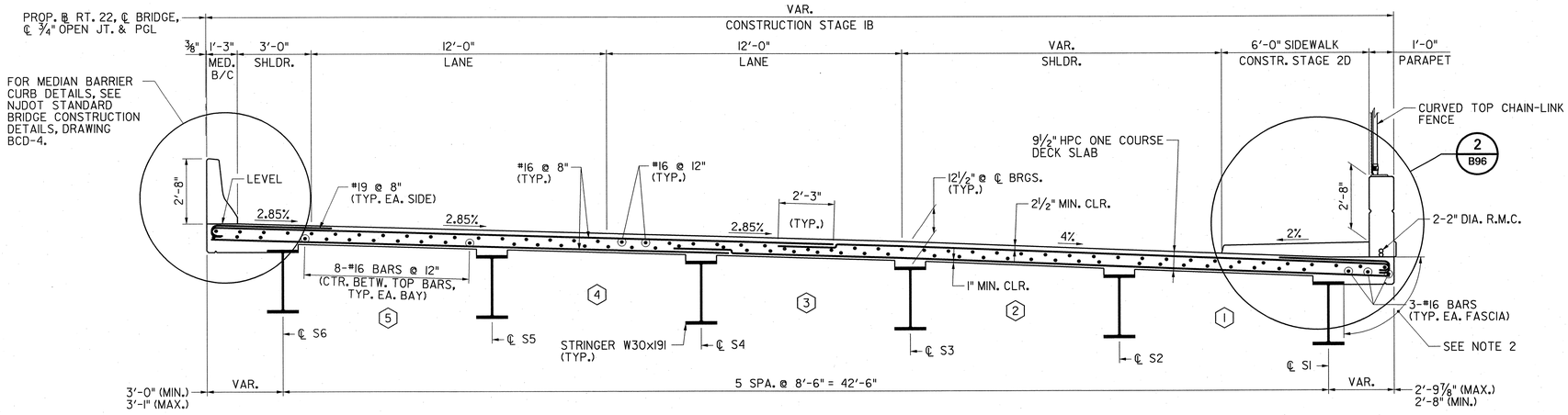


**EASTBOUND**

**NOTES:**

1. FOR THE NOTES, SEE EASTBOUND DECK PLAN SH. B93.
2. THE EXPOSED FACE OF THE DECK SLAB, INCLUDING THE UNDERSIDE, FOR THE ENTIRE LENGTH OF THE BRIDGE ON THE SOUTH SIDE OF THE EASTBOUND ROADWAY, IS TO BE STAINED BROWN, FEDERAL CHIP NO. 30111. FOR STAINING REQUIREMENTS SEE SUBSECTION 613.03.03 - F OF THE SPECIAL PROVISIONS. COST OF STAINING IS TO BE INCLUDED IN PAY ITEM "CONCRETE BRIDGE DECK, HPC".

**NOTE:**

DIAPHRAGMS AND SHEAR STUDS NOT SHOWN FOR CLARITY.

## TYPICAL DECK SECTIONS

(LOOKING EAST)
⅜" = 1'-0"

**LEGEND:**

(1) BAY NUMBER

SI STRINGER DESIGNATION

3/8" = 1'-0"
1' 0 2' 4' 8'

| REVISION | BY | CKD. | DATE |
|---|---|---|---|
| | | | |
| | | | |
| | | | |
| | | | |

PARSONS BRINCKERHOFF CADD DATA
OPERATOR marquema
PLOT DATE 01-DEC-2009 14:58
PENTABLE str-full.tbl
DESIGN FILE T:\00404\struc\Bridge 2\db02 cs.dgn

| CONTROL SECTION | | | JOB NO. |
|---|---|---|---|
| DES. BY | M. CHEN | CHK. BY | L. LAU |
| DWN. BY | J. BOGNAR | | |
| EST. BY | C. MANJUNATH | CHK. BY | M. CHEN |
| SPECS. BY | B. KARALIUS | | |
| IN CHARGE OF | B. KARALIUS | | |

NEW JERSEY DEPARTMENT OF TRANSPORTATION
BUREAU OF STRUCTURAL ENGINEERING

# TYPICAL DECK SLAB SECTIONS

ROUTE 22 LIBERTY AVENUE & CONRAIL BRIDGE
CONTRACT NO. 057009080

HILLSIDE TOWNSHIP MUNICIPALITY — UNION COUNTY

PB AMERICAS, INC.
CERTIFICATION OF AUTHORIZATION NO. 24GA28029800
BRUCE J. KARALIUS
NEW JERSEY PROFESSIONAL ENGINEER LICENSE NO. 26369

SCALE: AS SHOWN

BRIDGE SHEET NO. B95 of B128

202

| STATE | FEDERAL PROJECT NO. | SHEET | TOTAL SHEETS |
|---|---|---|---|
| N.J. | FS-BR-0040 (168) | | |

STRUCTURE NO. 2004-163

ROUTE 22 OVER ACCESS ROAD
(FORMERLY STR. NO. 2004-153)

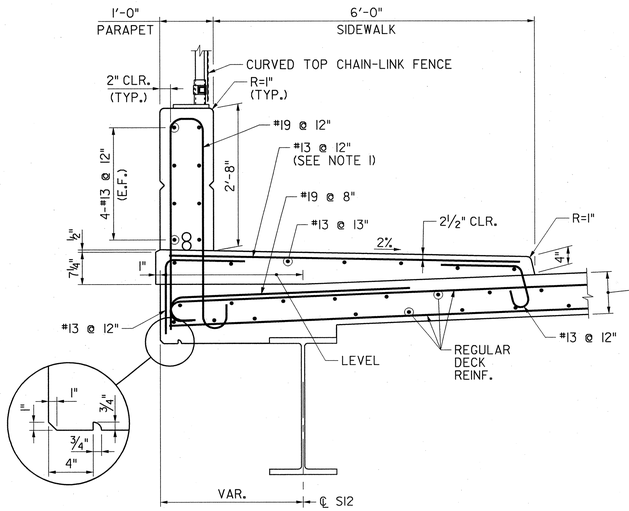


DETAIL 1 (B95)
¾" = 1'-0"

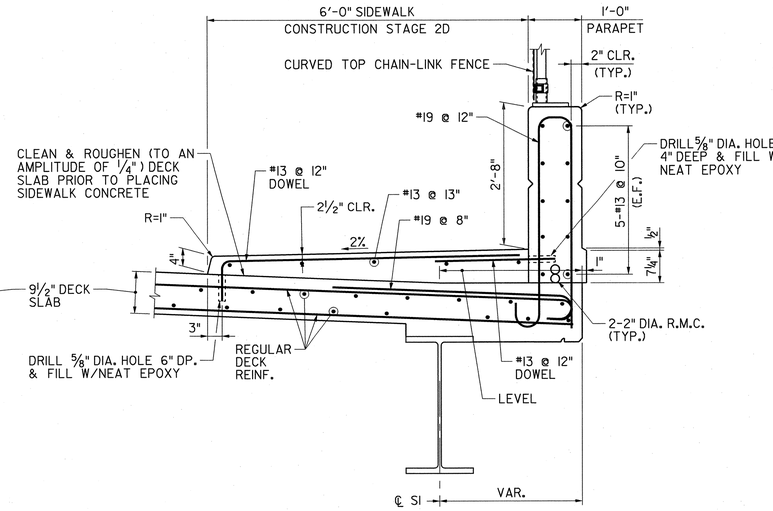


DETAIL 2 (B95)
¾" = 1'-0"

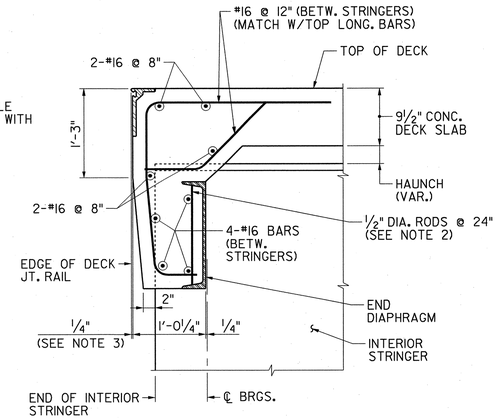


SECTION A (B93,94)
1" = 1'-0"

**NOTE:**
REGULAR DECK REINF. NOT SHOWN FOR CLARITY.

**NOTES:**

1. AS AN OPTION, THE CONTRACTOR MAY PROVIDE ONE BAR RATHER THAN THREE BARS AS SHOWN IN THE NJDOT STANDARD BRIDGE CONSTRUCTION DETAILS, BCD-3, AT NO ADDITIONAL COST.
2. WELD RODS ALL AROUND WITH ¼" FILLET WELD TOP AND BOTTOM. COST OF WELDED REINFORCEMENT BARS AND WELDING SHALL BE INCLUDED IN PAY ITEM "STRUCTURAL STEEL."
3. THE DIMENSION VARIES AS PER MANUFACTURER. THE CONTRACTOR SHALL MAKE ALL NECESSARY ADJUSTMENTS TO ALL ASSOCIATED BRIDGE COMPONENTS BASED ON THE ACTUAL DIMENSION.
4. RIBS ARE ASSUMED TO BE 2" DEEP. SPECIAL DESIGN CONSIDERATIONS ARE REQUIRED FOR DEEPER FORMS.
5. WI SHALL BE EQUAL TO OR LESS THAN W2.

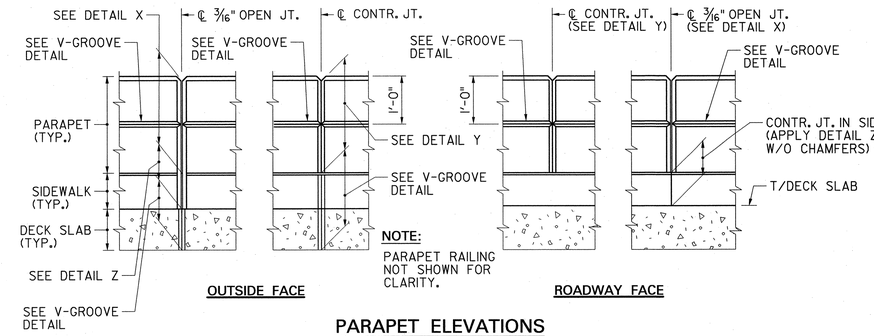


PARAPET ELEVATIONS
N.T.S.

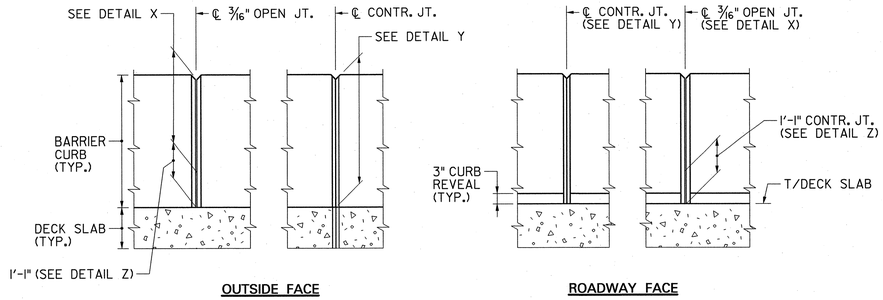


MEDIAN BARRIER CURB ELEVATIONS
N.T.S.

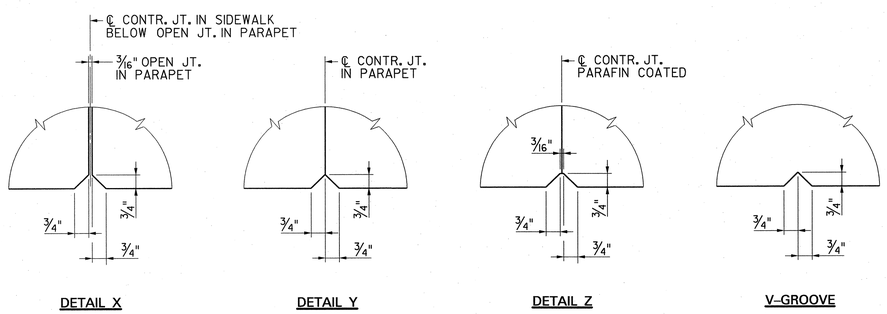


PARAPET AND MEDIAN BARRIER JOINT DETAILS
N.T.S.

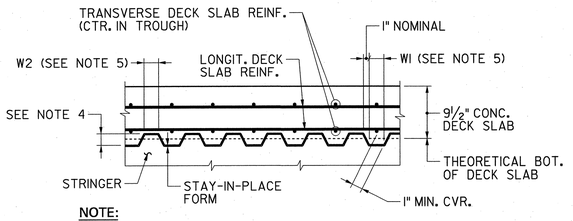


**NOTE:**
SEE BCD-507-4 FOR OTHER DETAILS AND REQUIREMENTS PERTAINING TO THE USE OF STAY-IN-PLACE FORMS.

LONGITUDINAL SLAB SECTION / STAY-IN-PLACE FORM DETAIL
N.T.S.

1" = 1'-0" : 1' 6" 0 1' 2'
3/4" = 1'-0" : 1' 0 1' 2' 4'

| REVISION | BY | CKD. | DATE |
|---|---|---|---|
| | | | |

PARSONS BRINCKERHOFF CADD DATA
OPERATOR marquema
PLOT DATE 01-DEC-2009 14:58
PENTABLE str-ful.tbl
DESIGN FILE I:\00404\struc\Bridge 2\db02_d.dgn

| CONTROL SECTION | | JOB NO. | |
|---|---|---|---|
| DES. BY | M. CHEN | CHK. BY | L. LAU |
| DWN. BY | J. BOGNAR | | |
| EST. BY | C. MANJUNATH | CHK. BY | M. CHEN |
| SPECS. BY | B. KARALIUS | | |
| IN CHARGE OF | B. KARALIUS | | |

NEW JERSEY DEPARTMENT OF TRANSPORTATION
BUREAU OF STRUCTURAL ENGINEERING

# DECK SLAB DETAILS - 1

ROUTE 22 LIBERTY AVENUE & CONRAIL BRIDGE
CONTRACT NO. 057009080

HILLSIDE TOWNSHIP MUNICIPALITY — UNION COUNTY

PB AMERICAS, INC.
CERTIFICATION OF AUTHORIZATION NO. 24GA28029800
BRUCE J. KARALIUS
NEW JERSEY PROFESSIONAL ENGINEER LICENSE NO. 26369

SCALE: AS SHOWN

BRIDGE SHEET NO. B96 of B128

203

| STATE | FEDERAL PROJECT NO. | SHEET | TOTAL SHEETS |
|---|---|---|---|
| N.J. | FS-BR-0040 (168) | | |

STRUCTURE NO. 2004-163

ROUTE 22 OVER ACCESS ROAD
(FORMERLY STR. NO. 2004-153)

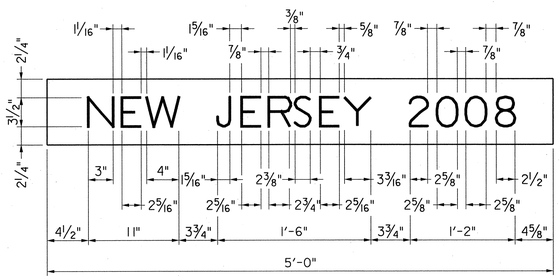


## DETAIL – C.S. LET. PANEL (5'-0")

(PANEL DATE SHALL BE YEAR OF BRIDGE COMPLETION)

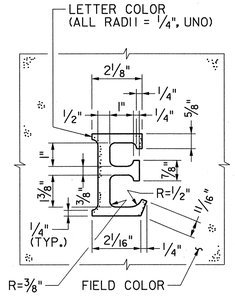


ELEVATION

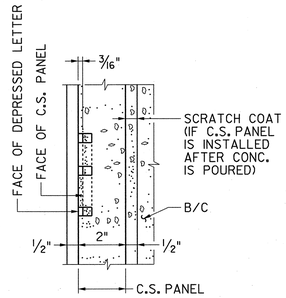


SECTION

## DETAILS – LETTERING

**NOTE:**

PANEL TO BE APPROVED BY THE ENGINEER, BEFORE INCORPORATING PANEL IN THE WORK.

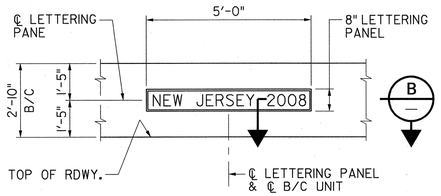


## INTERIOR ELEVATION – PARAPET PANEL

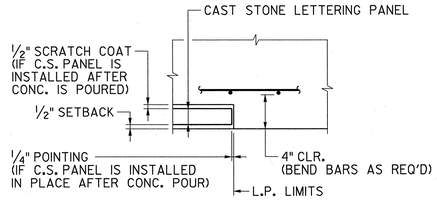


SECTION B

**NOTES:**

1. LETTERING PANELS SHALL BE PRECAST REINFORCED CONCRETE IN ONE PIECE WITH THE EXPOSED AGGREGATE AS PER SUBSECTION 501.22 OF THE SPECIFICATIONS. SURFACE FINISH FOR THE FIELD SHALL BE A MEDIUM FEATURE EXPOSED AGGREGATE WITH A REDDISH-BROWN COLORATION. SURFACE FINISH FOR LETTERS AND NUMBERS SHALL BE A LIGHT GREEN CRUSHED QUARTZ. SAMPLES SHOWING DESIRED COLORATION, AGGREGATE AND TEXTURES MAY BE EXAMINED IN THE OFFICE OF THE ENGINEER. CARE SHALL BE USED TO PREVENT MORTAR DISCOLORATION OF EXPOSED SURFACES OF THE PANEL. COST OF PANEL SHALL BE INCLUDED IN PRICE BID FOR CONCRETE CONTAINING IT.
2. LOCATION OF LETTERING PANEL IS SHOWN ON GP&E. ENGINEER MAY CHANGE LOCATION OF LETTERING PANEL.

## DETAILS OF CAST STONE LETTERING PANEL

N.T.S.

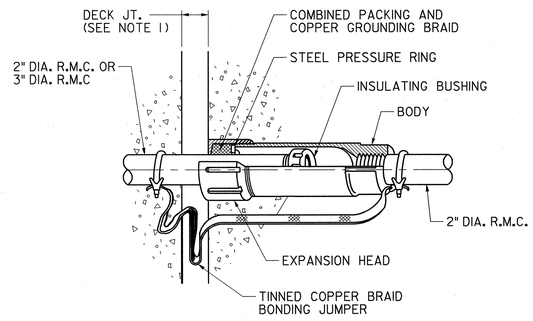


## R.M.C. EXPANSION FITTING DETAIL

N.T.S.

**NOTE:**

EXPANSION FITTINGS SHALL BE PROVIDED ACROSS THE DECK JOINTS AT THE ABUTMENTS, AND THE COST OF R.M.C. EXPANSION FITTINGS SHALL BE INCLUDED IN THE COST OF THE ASSOCIATED CONDUIT.

| REVISION | BY | CKD. | DATE |
|---|---|---|---|
| | | | |
| | | | |
| | | | |
| | | | |

NEW JERSEY DEPARTMENT OF TRANSPORTATION
BUREAU OF STRUCTURAL ENGINEERING

# DECK SLAB DETAILS – 2

ROUTE 22 LIBERTY AVENUE & CONRAIL BRIDGE
CONTRACT NO. 057009080

HILLSIDE TOWNSHIP (MUNICIPALITY) — UNION (COUNTY)

PB AMERICAS, INC.
CERTIFICATION OF AUTHORIZATION NO. 24GA28029800

BRUCE J. KARALIUS
NEW JERSEY PROFESSIONAL ENGINEER LICENSE NO. 26369

SCALE: AS SHOWN

BRIDGE SHEET NO. B97 of B128

204

| CONTROL SECTION | | JOB NO. | |
|---|---|---|---|
| DES. BY | M. CHEN | CHK. BY | L. LAU |
| DWN. BY | M. P. MARUE | | |
| EST. BY | C. MANJUNATH | CHK. BY | M. CHEN |
| SPECS. BY | B. KARALIUS | | |
| IN CHARGE OF | B. KARALIUS | | |

PARSONS BRINCKERHOFF CADD DATA
OPERATOR marruema
PLOT DATE 01-DEC-2009 14:59
PENTABLE str-full.tbl
DESIGN FILE T:\00404\struc\Bridge 2\db02-a.dgn

| STATE | FEDERAL PROJECT NO. | SHEET | TOTAL SHEETS |
|---|---|---|---|
| N.J. | FS-BR-0040 (168) | | |

STRUCTURE NO. 2004-163

ROUTE 22 OVER ACCESS ROAD
(FORMERLY STR. NO. 2004-153)

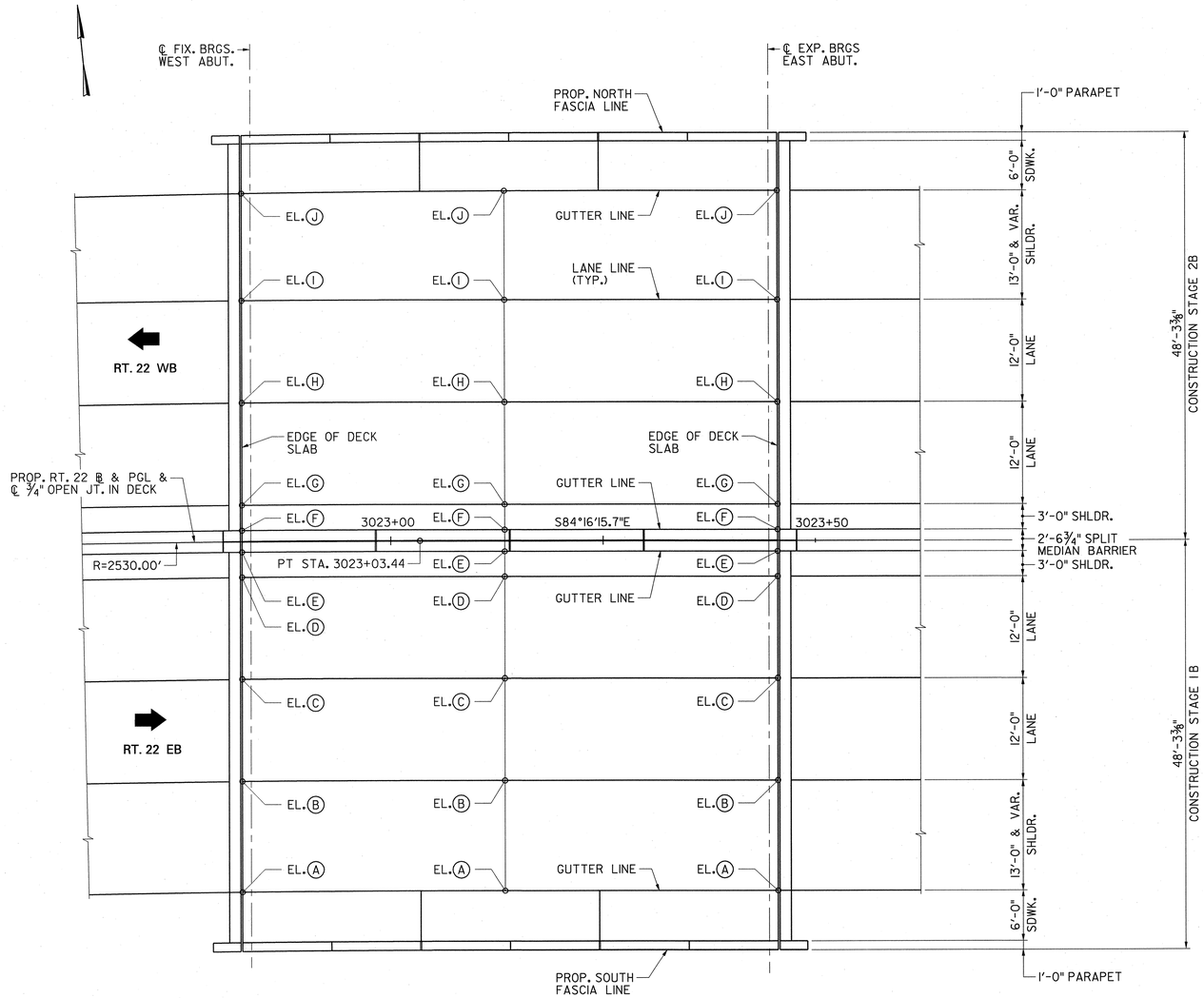


## TOP OF DECK – PLAN

1/8" = 1'-0"

### TOP OF DECK ELEVATIONS - EASTBOUND

| STATION | GUTTER LINE EL. A | SHOULDER LINE EL. B | LANE LINE EL. C | SHOULDER LINE EL. D | GUTTER LINE EL. E |
|---|---|---|---|---|---|
| 3022+25 | 86.20 | 86.73 | 87.07 | 87.41 | 87.50 |
| 3022+50 | 87.30 | 87.82 | 88.16 | 88.51 | 88.59 |
| 3022+75 | 88.40 | 88.92 | 89.26 | 89.60 | 89.69 |
| 3023+00 | 89.50 | 90.02 | 90.36 | 90.70 | 90.79 |
| 3023+25 | 90.59 | 91.11 | 91.45 | 91.80 | 91.88 |
| 3023+50 | 91.69 | 92.21 | 92.55 | 92.89 | 92.98 |
| 3023+75 | 92.79 | 93.31 | 93.65 | 93.99 | 94.08 |
| 3024+00 | 93.88 | 94.40 | 94.74 | 95.09 | 95.17 |
| * W. ABUT. | 88.72 | 89.25 | 89.59 | 89.93 | 90.01 |
| * E. ABUT. | 91.50 | 92.02 | 92.36 | 92.70 | 92.79 |

### TOP OF DECK ELEVATIONS - WESTBOUND

| STATION | GUTTER LINE EL. F | SHOULDER LINE EL. G | LANE LINE EL. H | SHOULDER LINE EL. I | GUTTER LINE EL. J |
|---|---|---|---|---|---|
| 3022+25 | 87.50 | 87.58 | 87.92 | 88.27 | 87.77 |
| 3022+50 | 88.59 | 88.68 | 89.02 | 89.36 | 88.86 |
| 3022+75 | 89.69 | 89.77 | 90.12 | 90.46 | 89.95 |
| 3023+00 | 90.79 | 90.87 | 91.21 | 91.55 | 91.04 |
| 3023+25 | 91.88 | 91.97 | 92.31 | 92.65 | 92.13 |
| 3023+50 | 92.98 | 93.06 | 93.41 | 93.75 | 93.23 |
| 3023+75 | 94.08 | 94.16 | 94.50 | 94.84 | 94.32 |
| 3024+00 | 95.17 | 95.26 | 95.60 | 95.94 | 95.42 |
| * W. ABUT. | 90.01 | 90.10 | 90.44 | 90.78 | 90.27 |
| * E. ABUT. | 92.79 | 92.87 | 93.21 | 93.55 | 93.03 |

NOTES:

* AT EDGE OF DECK SLAB.

SHADED AREAS INDICATE APPROACH ROADWAY ELEVATIONS.

PARSONS BRINCKERHOFF CADD DATA
OPERATOR marquema
PLOT DATE 01-DEC-2009 14:59
PENTABLE str-full.tbl
DESIGN FILE T:\00404\struc\Bridge 2\dp02_f.dgn

| CONTROL SECTION | | JOB NO. | |
|---|---|---|---|
| DES. BY | M. CHEN | CHK. BY | L. LAU |
| DWN. BY | M. P. MARUE | | |
| EST. BY | C. MANJUNATH | CHK. BY | M. CHEN |
| SPECS. BY | B. KARALIUS | | |
| IN CHARGE OF | B. KARALIUS | | |

1/8" = 1'-0"
1'0 2' 4' 8' 16'

| REVISION | BY | CKD. | DATE |
|---|---|---|---|
| | | | |

NEW JERSEY DEPARTMENT OF TRANSPORTATION
BUREAU OF STRUCTURAL ENGINEERING

## TOP OF DECK ELEVATIONS

ROUTE 22 LIBERTY AVENUE & CONRAIL BRIDGE
CONTRACT NO. 057009080

HILLSIDE TOWNSHIP
MUNICIPALITY

UNION
COUNTY

PB AMERICAS, INC.
CERTIFICATION OF AUTHORIZATION NO. 24GA28029800

BRUCE J. KARALIUS
NEW JERSEY PROFESSIONAL ENGINEER LICENSE NO. 26369

SCALE: AS SHOWN

BRIDGE SHEET NO. B98 of B128

205