STATE	FEDERAL PROJECT NO.	SHEET	TOTAL SHEETS
N.J.	FS-BR-0040 (168)		

STRUCTURE NO. 2004-164

ROUTE 22 OVER CONRAIL AND LIBERTY AVENUE
(FORMERLY STR. NO. 2004-153)

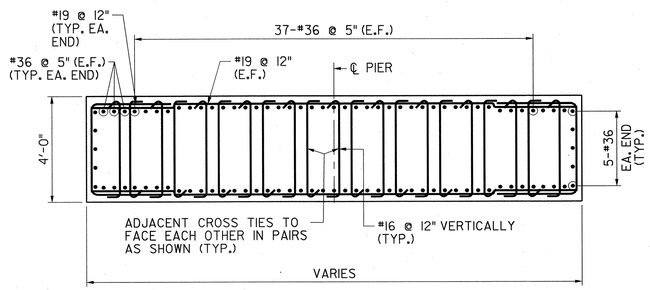

WEST PIER

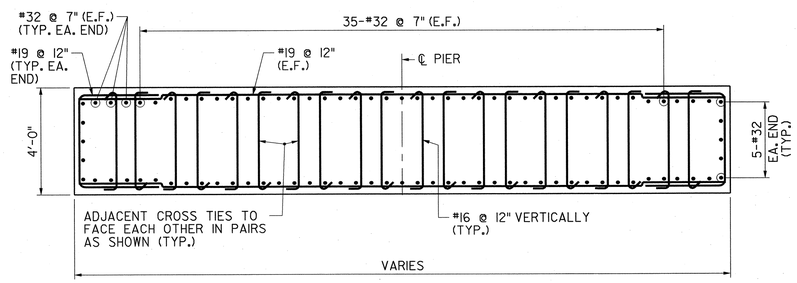

CENTER PIER

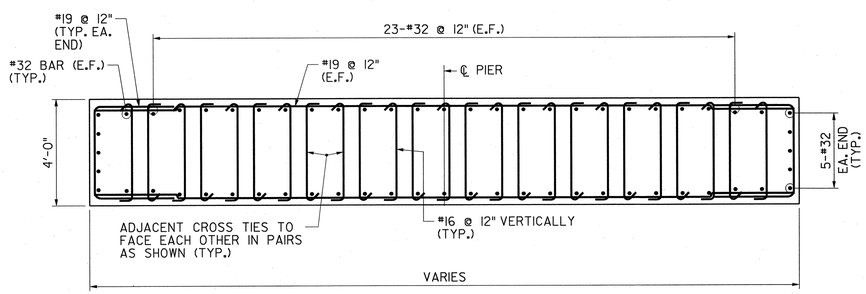

EAST PIER

SECTION B B30,31,32
3/8" = 1'-0"

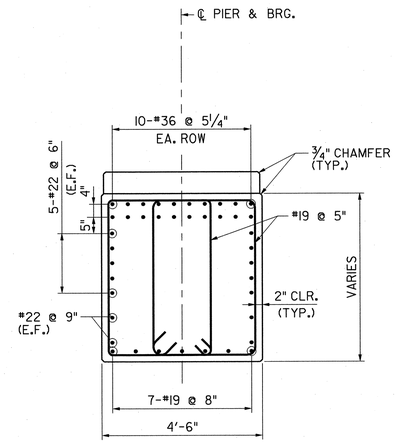

WEST PIER

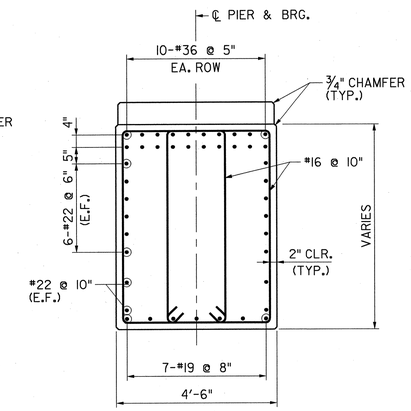

CENTER PIER

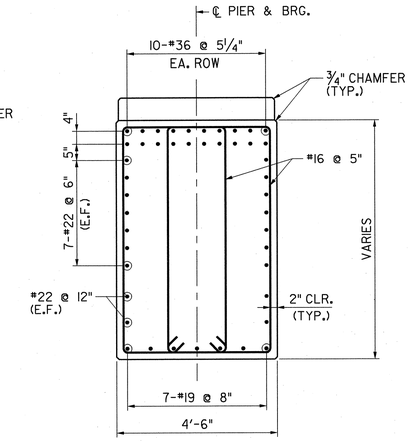

EAST PIER

SECTION C B30,31,32
1/2" = 1'-0"

CONTROL SECTION			JOB NO.
DES. BY	Y. CHEN	CHK. BY	B. KARALIUS
DWN. BY	F. SKROBOT		
EST. BY	C. MANJUNATH	CHK. BY	M. CHEN
SPECS. BY	B. KARALIUS		
IN CHARGE OF	B. KARALIUS		

1/2" = 1'-0" 1' 0 1' 2' 4'
3/8" = 1'-0" 1' 0 2' 4' 8'

REVISION	BY	CKD.	DATE

NEW JERSEY DEPARTMENT OF TRANSPORTATION
BUREAU OF STRUCTURAL ENGINEERING

PIER SECTIONS AND DETAILS – 1

ROUTE 22 LIBERTY AVENUE & CONRAIL BRIDGE
CONTRACT NO. 057009080

HILLSIDE TOWNSHIP MUNICIPALITY — UNION COUNTY

PB AMERICAS, INC.
CERTIFICATION OF AUTHORIZATION NO. 24GA28029800
BRUCE J. KARALIUS
NEW JERSEY PROFESSIONAL ENGINEER LICENSE NO. 26369

SCALE: AS SHOWN

BRIDGE SHEET NO. B33 of B128

140

PARSONS BRINCKERHOFF CADD DATA
OPERATOR marruema
PLOT DATE 04-DEC-2009 14:23
PENTABLE str-full.tbl
DESIGN FILE T:\00404\struc\Bridge.1\pr01_e.dgn

STATE	FEDERAL PROJECT NO.	SHEET	TOTAL SHEETS
N.J.	FS-BR-0040 (168)		

STRUCTURE NO. 2004-164

ROUTE 22 OVER CONRAIL AND LIBERTY AVENUE
(FORMERLY STR. NO. 2004-153)

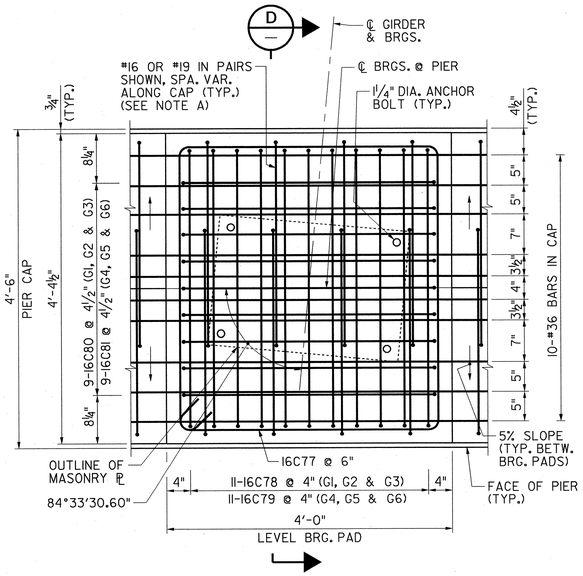

GRILLAGE DETAIL – WEST PIER

1" = 1'-0"

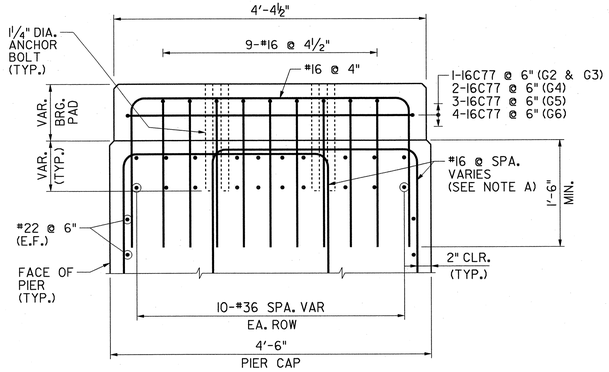

SECTION D

1" = 1'-0"

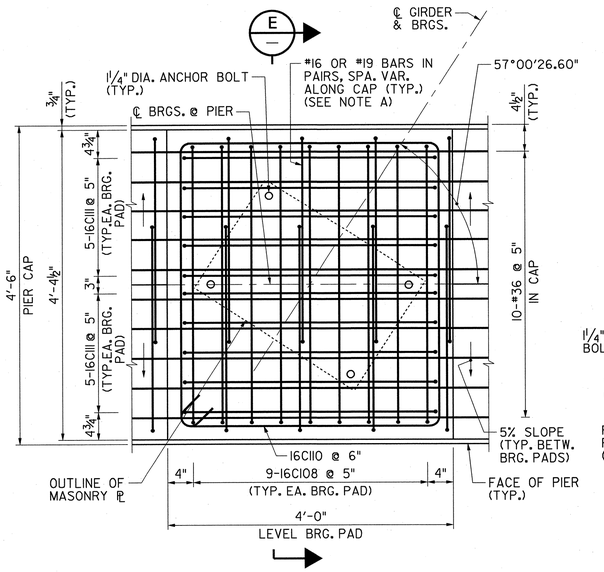

GRILLAGE DETAIL – CENTER PIER

1" = 1'-0"

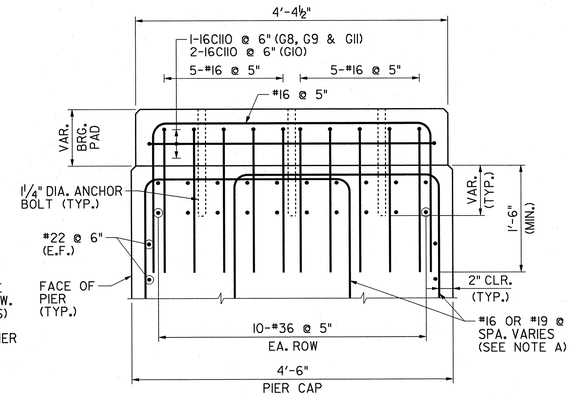

SECTION E

1" = 1'-0"

NOTE A:

SPACING OF STIRRUP BARS ALONG CAP VARY. GRILLAGE BARS ARE TO BE ADJUSTED AS REQ'D TO MISS SLEEVES AND MAINTAIN MAXIMUM SPACING INDICATED AT THAT LOCATION.

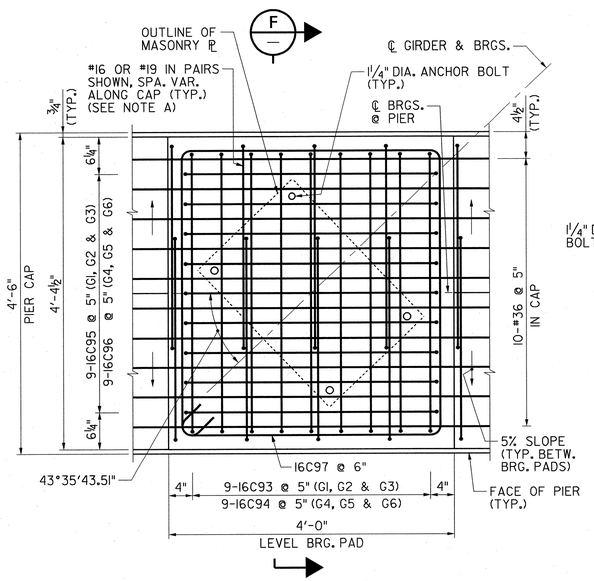

GRILLAGE DETAIL – EAST PIER

1" = 1'-0"

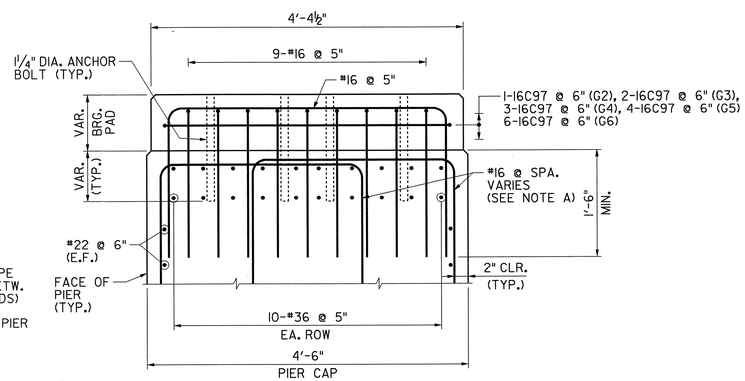

SECTION F

1" = 1'-0"

NOTES:

1. GRILLAGE REINFORCEMENT SHALL BE EPOXY COATED.

1" = 1'-0"

1' 6" 0 1' 2'

REVISION	BY	CKD.	DATE

CONTROL SECTION		JOB NO.	
DES. BY	Y. CHEN	CHK. BY	B. KARALIUS
DWN. BY	F. SKROBOT		
EST. BY	C. MANJUNATH	CHK. BY	M. CHEN
SPECS. BY	B. KARALIUS		
IN CHARGE OF	B. KARALIUS		

NEW JERSEY DEPARTMENT OF TRANSPORTATION
BUREAU OF STRUCTURAL ENGINEERING

PIER SECTIONS AND DETAILS – 2

ROUTE 22 LIBERTY AVENUE & CONRAIL BRIDGE
CONTRACT NO. 057009080

HILLSIDE TOWNSHIP MUNICIPALITY — UNION COUNTY

PB AMERICAS, INC.
CERTIFICATION OF AUTHORIZATION NO. 24GA28029800

Bruce J. Karalius
BRUCE J. KARALIUS
NEW JERSEY PROFESSIONAL ENGINEER LICENSE NO. 26369

SCALE: AS SHOWN

BRIDGE SHEET NO. B34 of B128

141

PARSONS BRINCKERHOFF CADD DATA
OPERATOR marruema
PLOT DATE 01-DEC-2009 14:23
PENTABLE str-full.tbl
DESIGN FILE T:\00404\struc\Bridge_1\pr01_f.dgn

STATE	FEDERAL PROJECT NO.	SHEET	TOTAL SHEETS
N.J.	FS-BR-0040 (168)		

STRUCTURE NO. 2004-164

ROUTE 22 OVER CONRAIL AND LIBERTY AVENUE
(FORMERLY STR. NO. 2004-153)

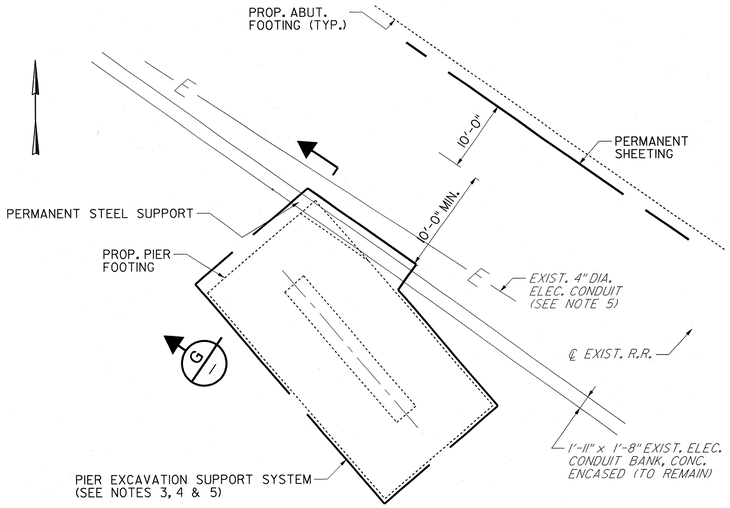

PLAN – EAST PIER FOOTING

1" = 10'

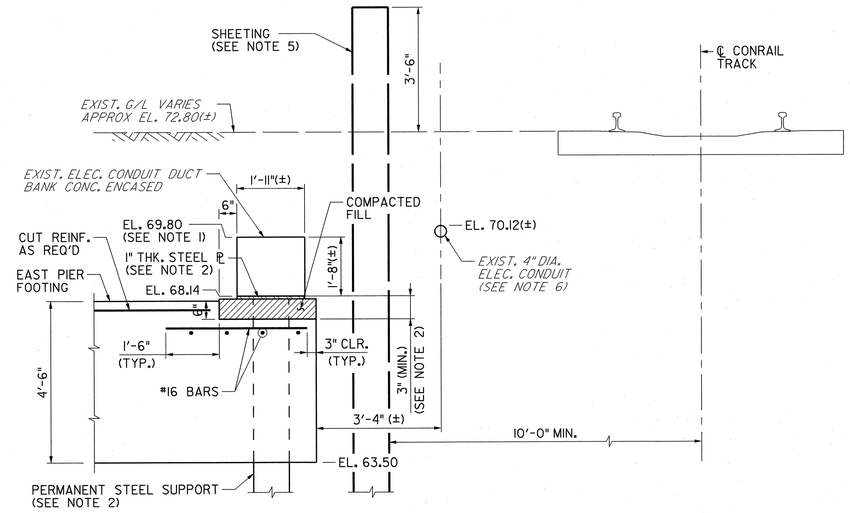

SECTION G

1/2" = 1'-0"

LEGEND:

AREA OF CONCRETE ENCASED DUCT BANK TO BE SUPPORTED (SEE NOTE 2)

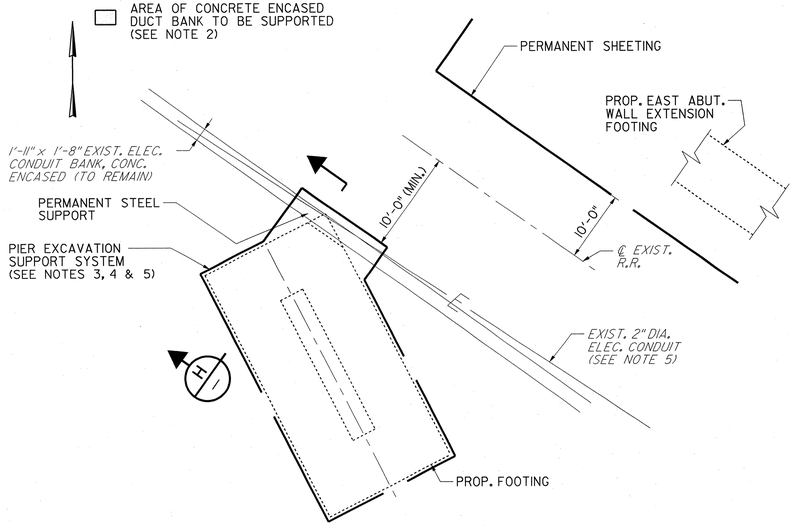

PLAN – CENTER PIER FOOTING

1" = 10'

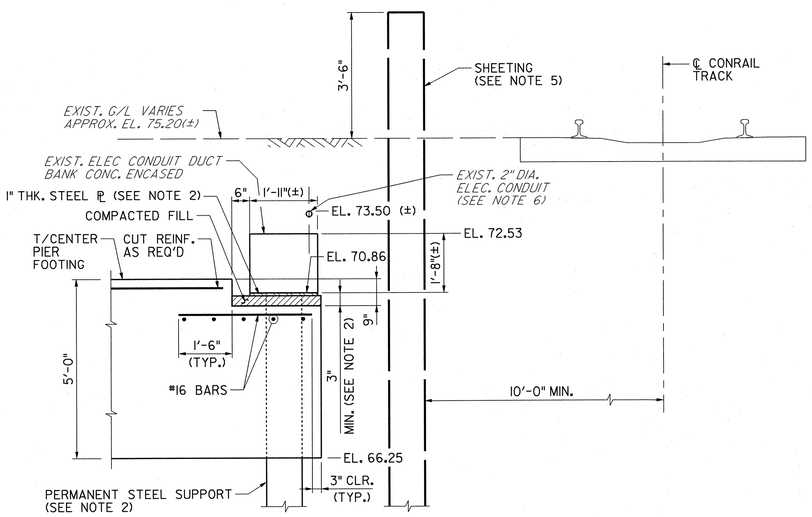

SECTION H

1/2" = 1'-0"

NOTES:

1. THE ELEVATION OF THE TOP OF CONCRETE ENCASEMENT OF THE DUCT BANK VARIES. THE ELEVATIONS SHOWN IN DETAILS G AND H ARE APPROXIMATE ELEVATIONS AT THE LOCATIONS WHERE THE SECTIONS ARE TAKEN.

   THE CONTRACTOR SHALL DIG TEST PITS TO VERIFY THE ELEVATIONS AND LOCATIONS OF THE UTILITIES PRIOR TO PERFORMING ANY WORK (ROADWAY ITEM).

2. DUE TO EXCAVATION REQUIRED TO INSTALL THE EAST PIER AND CENTER PIER FOOTINGS, THE EXISTING PSE&G CONCRETE ENCASED ELECTRICAL CONDUIT BANK WILL BE EXPOSED. THE CONTRACTOR IS RESPONSIBLE FOR DESIGNING A SYSTEM FOR SUPPORTING THE ELECTRIC CONDUIT BANK. THE SUPPORT SYSTEM IS TO BE SUBMITTED AND NEEDS TO BE APPROVED BY PSE&G AND THE ENGINEER PRIOR TO PERFORMING ANY WORK. THE COST OF THE SUPPORT SYSTEM IS TO BE INCLUDED IN THE COST OF THE SHEETING. REQUIREMENTS FOR THE SUPPORT SYSTEM ARE AS FOLLOWS:

   A. THE SUPPORT SYSTEM IS TO BE CONSTRUCTED OF STEEL MEMBERS AND IS TO REMAIN IN PLACE AFTER CONSTRUCTION IS COMPLETE.

   B. A 1-INCH THICK PLATE IS TO BE PLACED UNDER THE CONDUIT BANK, BETWEEN THE CONDUIT BANK AND THE SUPPORT SYSTEM. THE PLATE IS TO BE PLACED UNDER THE FULL LENGTH AND WIDTH OF THE EXPOSED DUCT BANK.

   C. A MINIMUM DISTANCE OF 3 INCHES IS REQUIRED FROM THE TOP OF THE FOOTING TO THE TOP OF THE CONCRETE ENCASEMENT. COMPACTED BACKFILL IS TO BE PLACED IN THIS ZONE; PLACING CONCRETE TO FILL THE VOID WILL NOT BE ALLOWED.

3. THE "PIER EXCAVATION SUPPORT SYSTEM" IS TO BE COMPOSED OF SHEETING, SECTIONS OF WHICH ARE TO BE REMOVED AND SECTIONS OF WHICH ARE TO BE LEFT IN PLACE.

4. THERE SHALL BE NO GAP IN THE SHEETING RESULTING FROM THE PRESENCE OF THE CONCRETE ENCASED DUCT BANK.

5. PORTIONS OF THE SHEETING AT THE CENTER PIER AND THE EAST PIER THAT ARE CLOSE TO THE RAILROAD ARE TO REMAIN IN PLACE, AS PER CONRAIL REQUIREMENTS. SHEETING TO REMAIN SHALL BE CUT 18 INCHES BELOW PROPOSED GRADE.

6. THERE ARE TWO CONDUITS FOR WHICH NO UTILITY COMPANY HAS TAKEN OWNERSHIP. AS SUCH IT IS NOT KNOWN IF THEY ARE IN USE OR ARE ABANDONED AND WHAT THE CONTENTS ARE. THE CONTRACTOR IS TO TREAT THE UNKNOWN CONDUITS AS IF THEY ARE IN SERVICE. THEY ARE TO BE PROTECTED AND SUPPORTED. THE CONTRACTOR IS RESPONSIBLE FOR ANY DAMAGE DONE.

1/2" = 1'-0"
1" = 10'
1' 0 1' 2' 4'
10' 5' 0 10' 20'

REVISION	BY	CKD.	DATE

NEW JERSEY DEPARTMENT OF TRANSPORTATION
BUREAU OF STRUCTURAL ENGINEERING

PIER SECTIONS AND DETAILS – 3

ROUTE 22 LIBERTY AVENUE & CONRAIL BRIDGE
CONTRACT NO. 057009080

HILLSIDE TOWNSHIP
MUNICIPALITY

UNION
COUNTY

PB AMERICAS, INC.
CERTIFICATION OF AUTHORIZATION NO. 24GA28029800
BRUCE J. KARALIUS
NEW JERSEY PROFESSIONAL ENGINEER LICENSE NO. 26369

SCALE: AS SHOWN

BRIDGE SHEET NO. B35 of B128

142

CONTROL SECTION		JOB NO.	
DES. BY	Y. CHEN	CHK. BY	B. KARALIUS
DWN. BY	F. SKROBOT		
EST. BY	C. MANJUNATH	CHK. BY	M. CHEN
SPECS. BY	B. KARALIUS		
IN CHARGE OF	B. KARALIUS		

PARSONS BRINCKERHOFF CADD DATA
OPERATOR mcrluema
PLOT DATE 04-DEC-2009 14:24
PENTABLE str6ulb1
DESIGN FILE T:\0040\struc\Bridge\Pier01_g.dgn

STATE	FEDERAL PROJECT NO.	SHEET	TOTAL SHEETS
N.J.	FS-BR-0040 (168)		

STRUCTURE NO. 2004-164

ROUTE 22 OVER CONRAIL AND LIBERTY AVENUE
(FORMERLY STR. NO. 2004-153)

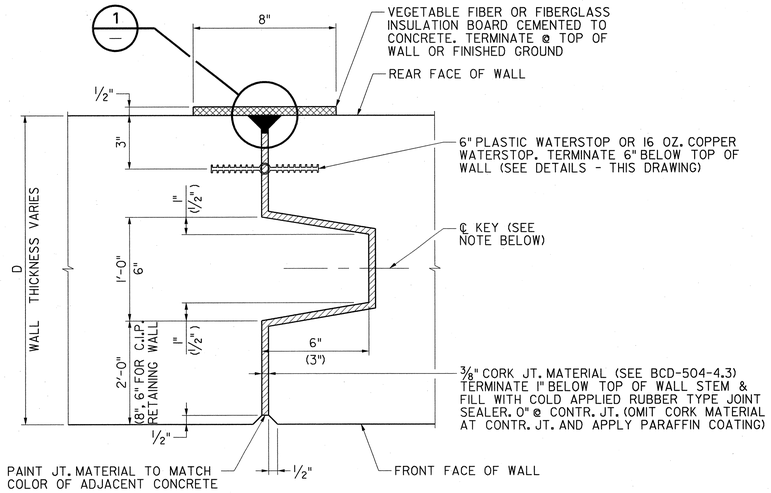

NOTES:

NUMBERS SHOWN IN PARENTHESES ARE FOR BACKWALL AND C.I.P. RETAINING WALL.

IN STEM, KEY TO EXTEND FROM TOP OF FOOTING TO 1'-0" BELOW TOP OF BRIDGE SEAT.
IN BACKWALL, KEY TO EXTEND FROM TOP OF BRIDGE SEAT TO 6" BELOW TOP OF BACKWALL.
IN CAST-IN-PLACE RETAINING WALL, KEY TO EXTEND FROM TOP OF FOOTING TO 6" BELOW TOP OF RAISED BACKWALL.

WALL EXPANSION JOINT DETAIL (SHOWN)
WALL CONTRACTION JOINT DETAIL (SIMILAR, EXCEPT AS NOTED)

N.T.S.

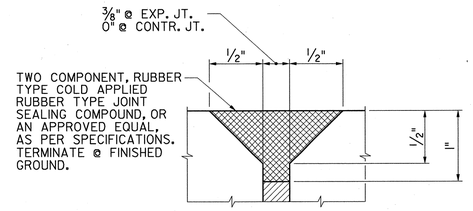

DETAIL 1
N.T.S.

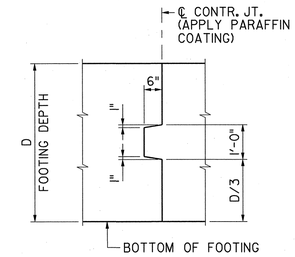

FOOTING CONTRACTION JOINT
1/2" = 1'-0"

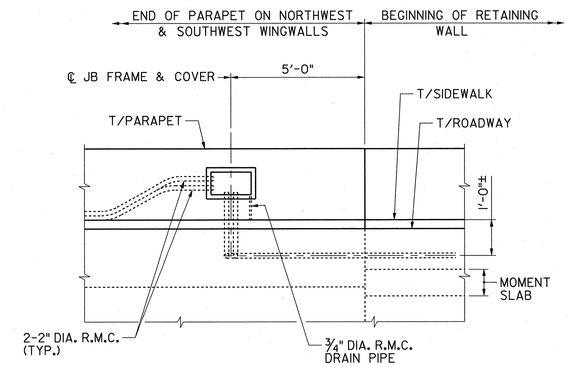

2" R.M.C. DETAIL – ELEVATION VIEW
N.T.S.

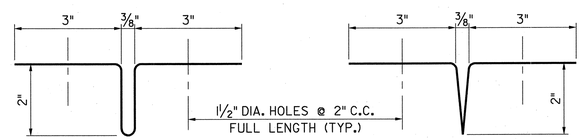

EXPANSION CONTRACTION

16 OZ. COPPER WATERSTOP – 10" WIDE
N.T.S.

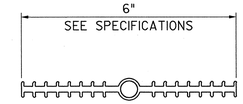

PLASTIC WATERSTOP
N.T.S.

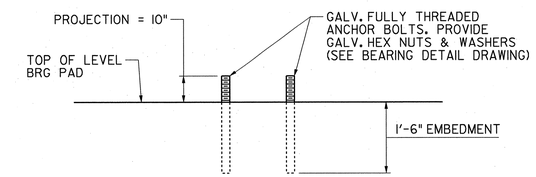

ANCHOR BOLT AND SLEEVE DETAIL
N.T.S.

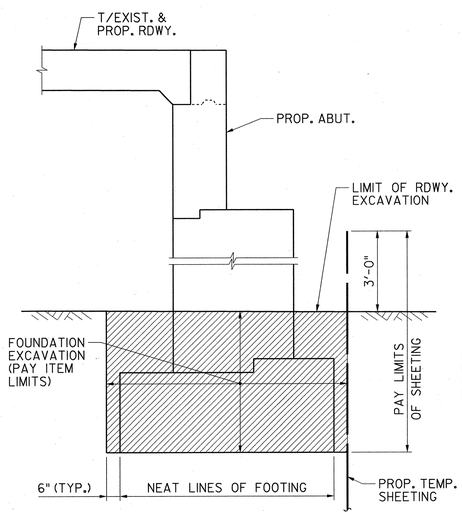

WEST ABUTMENT

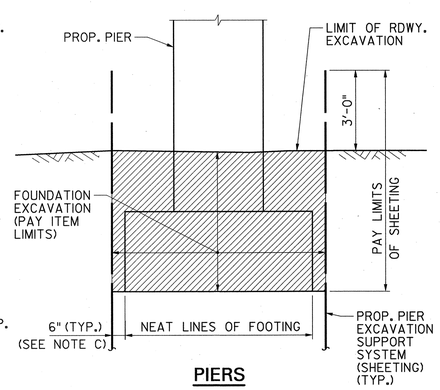

PIERS

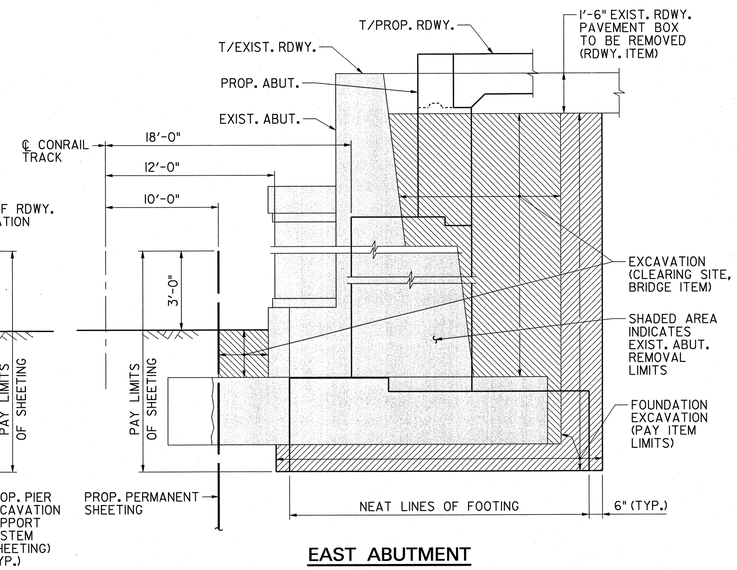

EAST ABUTMENT

EXCAVATION PAY LIMITS
N.T.S.

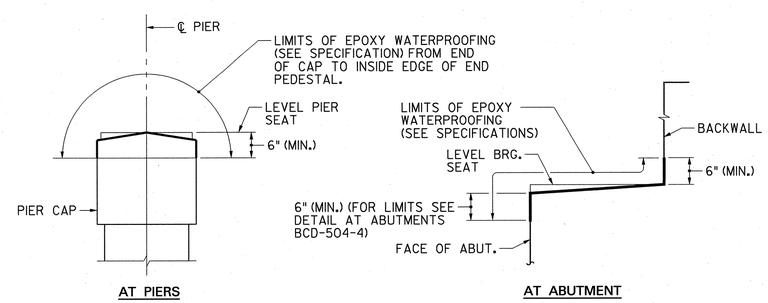

AT PIERS AT ABUTMENT

EPOXY WATERPROOFING (WITH GRIT) SEAL COAT LIMITS
3/4" = 1'-0"

NOTES:

A. ACTUAL SHEETING LAYOUTS ARE SHOWN ELSEWHERE.

B. MINIMUM HEIGHT OF SHEETING ADJACENT TO CONRAIL TRACK IS 3'-6". PAYMENT FOR THE ADDITIONAL 6 INCHES WILL NOT BE MEASURED.

C. THIS DIMENSION WILL BE GREATER IN THE AREA WHERE THE ELECTRIC DUCT BANK IS IN CLOSE PROXIMITY TO THE FOOTING (SEE EAST PIER FOOTING AND CENTER PIER FOOTING PLANS ON SH. B35).

D. EXCAVATION AND SHEETING PAY LIMITS FOR EAST ABUTMENT RETAINING WALL ARE SIMILAR TO THAT SHOWN FOR THE EAST ABUTMENT.

1/2" = 1'-0" 1' 0 1' 2' 4'
3" = 1'-0" 0 3" 6" 9" 12"
3/4" = 1'-0" 1' 0 1' 2' 4'

REVISION	BY	CKD.	DATE

CONTROL SECTION		JOB NO.	
DES. BY	Y. CHEN	CHK. BY	L. LAU
DWN. BY	M. P. MARUE		
EST. BY	C. MANJUNATH	CHK. BY	M. CHEN
SPECS. BY	B. KARALIUS		
IN CHARGE OF	B. KARALIUS		

PARSONS BRINCKERHOFF CADD DATA
OPERATOR: marueme
PLOT DATE: 01-DEC-2009 14:24
PENTABLE: str-full.tbl
DESIGN FILE: T:\0404\struc\Bridge_1\su01.dgn

NEW JERSEY DEPARTMENT OF TRANSPORTATION
BUREAU OF STRUCTURAL ENGINEERING

MISCELLANEOUS SUBSTRUCTURE DETAILS

ROUTE 22 LIBERTY AVENUE & CONRAIL BRIDGE
CONTRACT NO. 057009080

HILLSIDE TOWNSHIP — MUNICIPALITY
UNION — COUNTY

PB AMERICAS, INC.
CERTIFICATION OF AUTHORIZATION NO. 24GA28029800
BRUCE J. KARALIUS
NEW JERSEY PROFESSIONAL ENGINEER LICENSE NO. 26369

SCALE: AS SHOWN

BRIDGE SHEET NO. B36 of B128

143

STATE	FEDERAL PROJECT NO.	SHEET	TOTAL SHEETS
N.J.	FS-BR-0040 (168)		

STRUCTURE NO. 2004-164

ROUTE 22 OVER CONRAIL AND LIBERTY AVENUE
(FORMERLY STR. NO. 2004-153)

NOTES:

1. DETAILS FOR BEARING COMPONENTS PRESENTED ON THESE DRAWINGS ARE BASED ON A PRELIMINARY DESIGN WHICH IS BASED ON MANUFACTURER DATA AND ARE SHOWN FOR INFORMATION ONLY. THE CONTRACTOR IS RESPONSIBLE FOR DESIGNING THE BEARINGS (INCLUDING SOLE PLATE, MASONRY PLATE, ANCHOR BOLTS, ANCHOR RODS, END PLATE AND GIRDER TO SOLE PLATE CONNECTION) ACCORDING TO THE INFORMATION PROVIDED IN THE BEARING SCHEDULE TABLE. THE DESIGN SHALL BE IN ACCORDANCE WITH THE 2007 (4TH EDITION) AASHTO LRFD BRIDGE DESIGN SPECIFICATIONS AS MODIFIED BY THE 2002 (4TH EDITION) NJDOT BRIDGES AND STRUCTURES DESIGN MANUAL AND NJDOT STANDARD DRAWINGS PLATE 2.5-2 "POT BRG.". THE SIZE OF THE MASONARY PLATE SHALL NOT EXCEED THE SIZE SHOWN ON THE DRAWINGS. THE CONTRACTOR IS ALSO RESPONSIBLE FOR REVISING ALL ASSOCIATED ELEVATIONS AND DETAILS (SUCH AS THE HEIGHT OF THE BRIDGE SEATS) BASED ON THE ACTUAL SIZE OF THE BEARINGS. THE DESIGN AND SHOP DRAWINGS OF POT BEARING ASSEMBLY SHALL BE SUBMITTED BY THE CONTRACTOR FOR THE ENGINEER'S APPROVAL.

   THE CONTRACTOR SHALL VERIFY ALL DIMENSIONS SHOWN AND CLEARANCES AFFECTING HIS WORK. FIELD MEASUREMENTS SHALL BE TAKEN PRIOR TO ANY FABRICATION IN ORDER TO ENSURE THE PROPER FIT OF THE POT BEARINGS. ANY CHANGES REQUIRED MUST BE SUBMITTED FOR THE ENGINEER'S APPROVAL.

2. ELASTOMERIC DISC SHALL BE LUBRICATED WITH MATERIAL COMPATIBLE WITH THE ELASTOMER. ELASTOMERIC DISC SHALL HAVE A MINIMUM DESIGN COMPRESSIVE STRENGTH OF 3,500 PSI.

3. THE POT BEARING MANUFACTURER MAY SUPPLY THEIR STANDARD PRODUCT, PROVIDING THAT ALL OF THE REQUIREMENTS OF THE AASHTO STANDARD BRIDGE DESIGN SPECIFICATIONS AND THOSE SHOWN ON THESE PLANS AND SPECIFICATIONS ARE MET.

4. THE POT BEARING MANUFACTURER SHALL PROVIDE COMPLETE DESIGN CALCULATIONS AND SHOP DRAWINGS BASED UPON THE FOLLOWING:

   A. THE MAXIMUM COEFFICIENT OF FRICTION SHALL BE 3%.

   B. THE MAXIMUM BEARING PRESSURES SHALL BE AS PER AASHTO STANDARD BRIDGE DESIGN SPECIFICATIONS.

   C. THE DESIGN LOADING GROUPS SHOWN IN THE POT BEARING DATA TABLE.

   D. THE EXPANSION BEARINGS SHALL BE CAPABLE OF PROVIDING THE TABULATED LONGITUDINAL MOVEMENT (ALONG THE LONGITUDINAL AXIS OF THE GIRDERS) IN EACH DIRECTION PLUS A CONSTRUCTION TOLERANCE OF 1".

   E. POT BEARINGS SHALL BE DESIGNED FOR A MINIMUM TOTAL ROTATION DUE TO SERVICE LOADS OF 0.03 RADIANS (INCLUDING CONSTRUCTION TOLERANCES).

   F. DAMAGE DUE TO BEARING MOVEMENT SHALL NOT BE PERMITTED AT THE SERVICE LIMIT STATE, AND IRREPARABLE DAMAGE SHALL NOT OCCUR AT THE STRENGTH LIMIT OR EXTREME EVENT STATE.

5. POLYTETRAFLUEROETHYLENE (PTFE) SHEET SHALL BE RECESSED INTO THE GUIDE PLATE AS SHOWN AND EPOXY BONDED TO THE GUIDE PLATE. THE THICKNESS AND THE MATERIAL OF THE BONDED PTFE SHEETS SHALL CONFORM TO THE AASHTO SPECIFICATIONS. THE PTFE USED ON THE GUIDE PLATE SHALL BE BONDED.

6. THE ELASTOMERIC PAD SHALL BE 50 DUROMETER HARDNESS. THE ELASTOMERIC PAD AND THE STEEL AND FABRIC REINFORCEMENT SHALL BE IN ACCORDANCE WITH SECTION 18.2.3 OF THE LATEST EDITION OF THE AASHTO LRFD BRIDGE CONSTRUCTION SPECIFICATION.

7. ALL STEEL, EXCEPT THE STAINLESS STEEL COMPONENTS, SHALL CONFORM TO AASHTO M270 (ASTM A709) GRADE 50W. ALL EXPOSED STEEL SURFACES (EXCEPT FOR STAINLESS STEEL AND SURFACES IN CONTACT WITH THE ELASTOMERIC DISC) SHALL BE HOT DIPPED GALVANIZED IN ACCORDANCE WITH THE SPECIFICATIONS.

8. STAINLESS STEEL SHALL CONFORM TO ASTM A167, TYPE 304 OR ASTM A240, TYPE 304.

9. ANCHOR BOLTS SHALL BE HIGH STRENGTH CONFORMING TO ASTM A449, AND SHALL BE GALVANIZED AS PER ASTM A153.

10. BRASS SEALING RINGS SHALL CONFORM TO FEDERAL SPECIFICATION QQ626 COMPOSITION 22 HALF HARD. THE RINGS SHALL BE ROLLED INTO A CIRCLE FROM A ROD AND BRAZED OR WELDED AND THEY SHALL BE RECESSED INTO THE ELASTOMERIC DISC AND SHALL FIT SNUGLY AGAINST THE POT WALL.

11. THE BEVELED SOLE PLATE FOR THE TYPE E AND EA BEARINGS SHALL BE FIELD WELDED TO THE GIRDER BOTTOM FLANGE SUCH THAT AT 70°F, THE TRANSVERSE CENTERLINE OF THE GUIDE BARS SHALL ALIGN WITH THE CENTERLINE OF THE GIRDER. THE REQUIRED OFFSETS FOR VARIOUS INSTALLATION TEMPERATURES SHALL BE PROVIDED ON THE SHOP DRAWINGS.

12. THE BEVELED SOLE PLATE SHALL BE USED TO KEEP THE BOTTOM OF THE SOLE PLATE TRULY LEVEL UNDER THE FULL FINAL DEAD LOAD. SOLE PLATE DIMENSIONS HAVE BEEN DETERMINED USING THE ANTICIPATED ROTATIONS OF THE GIRDERS.

13. IT MAY BE NECESSARY TO INSTALL THE POT BEARING DURING THE CONSTRUCTION OF THE BEARING PAD USING LEVELING NUTS OR TEMPORARY SHORING.

14. THE THERMAL MOVEMENT INDICATED IN THE BEARING SCHEDULE IS A TOTAL REQUIRED MOVEMENT FOR TEMPERATURE CHANGE FROM -30°F TO 120°F. THE CONTRACTOR SHALL PRESET THE BEARING TO ACCOUNT FOR THE SETTING TEMPERATURE.

15. TOTAL BEARING HEIGHT (Hb) IS APPROXIMATE. BEARING HEIGHT INDICATED IN THE DIMENSION TABLE ON SH. B39 WAS USED TO CALCULATE BRIDGE SEAT ELEVATIONS.

16. BRIDGE SEATS SHALL NOT BE POURED UNTIL THE BEARINGS ARE SELECTED, BEARING SHOP DRAWINGS HAVE BEEN APPROVED AND THE BRIDGE SEAT ELEVATIONS ARE VERIFIED AND APPROVED BY THE ENGINEER.

17. ADJUSTMENTS TO THE ANCHOR BOLT LOCATIONS AND GRILLAGE REINFORCEMENT ARE THE RESPONSIBILITY OF THE CONTRACTOR. FINAL ANCHOR BOLT LOCATIONS MUST NOT INTERFERE WITH THE REINFORCEMENT IN THE ABUTMENT AND PIER SEATS.

18. WELDING OF THE BOTTOM FLANGE TO THE SOLE PLATE AT THE BEARINGS SHALL BE CONTROLLED SO THAT THE SOLE PLATE TEMPERATURE AT THE PTFE SHEET OR ELASTOMERIC DISC SURFACE DOES NOT EXCEED 250°F, AS DETERMINED BY PYROMETRIC STICKS OR OTHER TEMPERATURE MONITORING DEVICES. QUENCHING TO ACCELERATE COOLING IS NOT PERMITTED.

19. THE CONTRACTOR IS CAUTIONED THAT SOME HORIZONTAL MOVEMENT OF THE GIRDERS AT THE EXPANSION BEARINGS MAY OCCUR DURING PLACEMENT OF DECK. IT IS THE CONTRACTOR'S RESPONSIBILTY TO SECURE GIRDERS DURING CONSTRUCTION AND ENSURE THAT THE WIDTH OF THE BOTTOM FLANGE OF EACH GIRDER BE SYMMETRIC TO THE CENTER OF THE POT BEARING AS SHOWN IN THE PLAN VIEW FOR EXPANSION BEARINGS ON SH. B39, UNDER THE FULL DEAD LOAD.

QUANTITIES

ITEM NO.	DESCRIPTION	UNIT	CONTRACT QUANTITIES STAGE 1B	CONTRACT QUANTITIES STAGE 2B
506009P	STRUCTURAL BEARING ASSEMBLY	UNIT	24	18

NEW JERSEY DEPARTMENT OF TRANSPORTATION
BUREAU OF STRUCTURAL ENGINEERING

BEARING DETAILS – 1

ROUTE 22 LIBERTY AVENUE & CONRAIL BRIDGE
CONTRACT NO. 057009080

HILLSIDE TOWNSHIP — MUNICIPALITY
UNION — COUNTY

REVISION	BY	CKD.	DATE

PB AMERICAS, INC.
CERTIFICATION OF AUTHORIZATION NO. 24GA28029800
BRUCE J. KARALIUS
NEW JERSEY PROFESSIONAL ENGINEER LICENSE NO. 26369

SCALE: AS SHOWN

BRIDGE SHEET NO. B37 of B128

144

CONTROL SECTION		JOB NO.	
DES. BY	L. LAU	CHK. BY	M. CHEN
DWN. BY	F. SKROBOT		
EST. BY	C. MANJUNATH	CHK. BY	M. CHEN
SPECS. BY	B. KARALIUS		
IN CHARGE OF	B. KARALIUS		

PARSONS BRINCKERHOFF CADD DATA
OPERATOR marcuema
PLOT DATE 01-DEC-2009 14:24
PENTABLE strfull.tbl
DESIGN FILE T:\0040\struc\Bridge\br01a.dgn

STATE	FEDERAL PROJECT NO.	SHEET	TOTAL SHEETS
N.J.	FS-BR-0040 (168)		

STRUCTURE NO. 2004-164

ROUTE 22 OVER CONRAIL AND LIBERTY AVENUE
(FORMERLY STR. NO. 2004-153)

BEARING DESIGN LOADS FOR SERVICE LIMIT STATE AND STRENGTH LIMIT STATE (Kips)

LOAD TYPE			FIXED BRGS. AT W. PIER & CTR. PIER			EXP. BRGS. AT W. & E. ABUTS.			EXP. BRGS. AT E. PIER		
			GF1	F1	GF2	E1	GE1	E2	E3	GE2	E4
VERTICAL LOADS	DEAD LOAD	MAX.	347	294	228	97	80	72	315	250	241
		MIN.	307	253	208	87	73	54	308	248	202
	LIVE LOAD	MAX.	206	182	160	112	105	103	204	201	165
		MIN.	-20	-11	-16	-14	-13	-19	-19	-14	-26
	DW LOADS	MAX.	37	31	26	11	9	8	32	27	26
		MIN.	31	27	22	9	8	6	31	27	22
HORIZONTAL LOADS	BREAKING FORCE	LONG.	8	8	8						
	WIND LOAD ON SUPERSTRUCTURE	TRAN.		80			50			60	
		LONG.	12	12	8						
	WIND LOAD ON LIVE LOAD	TRAN.	0	3	0	0	15	0		3	
		LONG.	5	6	5						
	THERMAL FORCE	TRAN.		50			30			40	
		LONG.	104	60	60	15	13	11	47	39	36
POT BEARING DESIGN GROUP LOADS	SERVICE I LIMIT STATE	MAX. VER	553	476	388	209	185	175	519	451	406
		MIN. VER	287	242	192	73	60	35	289	234	176
		TRAN.	0	77	0	0	60	0	0	61	0
		LONG.	121	78	75	15	13	11	47	39	36
	SERVICE IV LIMIT STATE	MAX. VER	347	294	228	97	80	72	315	250	241
		MIN. VER	307	253	208	87	73	54	308	248	202
		TRAN.	0	106	0	0	65	0	0	82	0
		LONG.	112	68	66	15	13	11	47	39	36
	STRENGTH I LIMIT STATE	MAX. VER	804	694	572	320	286	272	759	671	597
		MIN. VER	234	202	154	52	41	14	236	192	131
		TRAN.	0	25	0	0	15	0	0	20	0
		LONG.	66	44	44	8	7	6	24	19	18
	STRENGTH III LIMIT STATE	MAX. VER	443	375	292	124	102	92	402	319	308
		MIN. VER	269	221	182	76	64	47	269	216	176
		TRAN.	0	137	0	0	85	0	0	104	0
		LONG.	69	47	41	8	7	6	24	19	18
EARTHQUAKE LOADS (Kips)	EXTREME EVENT 1 LIMIT STATE	MAX. VER	546	466	372	180	155	144	504	420	390
		TRAN.	60	0	50	50	0	75	60		50
		LONG.	83	83	83	0	0	0	0	0	0
SUGGESTED BEARING VERTICAL CAPACITY			600	600	500	250	300	250	600	500	500
SUGGESTED HORIZONTAL DESIGN LOADS	MAX. % TO TOTAL VER. CAPACITY	TRAN.	13%	23%	11%	20%	28%	30%	13%	21%	12%
		LONG.	20%	14%	17%	6%	4%	4%	8%	8%	7%
	HORIZONTAL LOADS	TRAN.	80	137	57	50	85	75	76	104	60
		LONG.	121	83	83	15	13	11	47	39	36
MIN. ALLOWABLE DESIGN PRESSURE (PSI)											
ON ELASTOMER			3500	3500	3500	3500	3500	3500	3500	3500	3500
ON UNFILLED PTFE			3500	3500	3500	3500	3500	3500	3500	3500	3500
HORIZONTAL THERMAL MOVEMENT											
LONGITUDINAL MOVEMENT (IN)						2	2	2			
TRANSVERSE MOVEMENT (IN)			0.5	0	0.5	0.5	0	0.5	0.5	0	0.5
MAX. LIVE LOAD ROTATION											
AT SERVICE LIMIT STATE (RAD)			0.003	0.003	0.003	0.005	0.005	0.005	0.003	0.003	0.003
QUANTITY											
NUMBER OF BEARINGS REQUIRED			4	4	4	8	8	8	2	2	2

SERVICE LIMIT STATE I = DL+ (LL+I) + BR + 0.3 x WS + WL + THERMAL

SERVICE LIMIT STATE IV = DL+ 0.7 x WS + THERMAL

EARTHQUAKE EXTREME EVENT 1 LIMIT STATE = 1.25(DL-DW) + 1.5 DW + 50%LL + EQ

STRENGTH LIMIT STATE I = 1.25 (DL - DW) + 1.5 DW + 1.75 (LL + I + BR) + 0.5 THERMAL

STRENGTH LIMIT STATE III = 1.25 (DL - DW) + 1.5 DW + 1.4 WS + 0.5 THERMAL

REVISION	BY	CKD.	DATE

NEW JERSEY DEPARTMENT OF TRANSPORTATION
BUREAU OF STRUCTURAL ENGINEERING

BEARING DETAILS – 2

ROUTE 22 LIBERTY AVENUE & CONRAIL BRIDGE
CONTRACT NO. 057009080

HILLSIDE TOWNSHIP — MUNICIPALITY
UNION — COUNTY

PB AMERICAS, INC.
CERTIFICATION OF AUTHORIZATION NO. 24GA28029800

BRUCE J. KARALIUS
NEW JERSEY PROFESSIONAL ENGINEER LICENSE NO. 26369

SCALE: AS SHOWN

BRIDGE SHEET NO. B38 of B128

145

CONTROL SECTION		JOB NO.	
DES. BY	L. LAU	CHK. BY	M. CHEN
DWN. BY	F. SKROBOT		
EST. BY	C. MANJUNATH	CHK. BY	M. CHEN
SPECS. BY	B. KARALIUS		
IN CHARGE OF	B. KARALIUS		

PARSONS BRINCKERHOFF CADD DATA
OPERATOR mariuenc
PLOT DATE 01-DEC-2009 14:24
PENTABLE strfull.tbl
DESIGN FILE T:\0040\structBridge\br01b.dgn

STATE	FEDERAL PROJECT NO.	SHEET	TOTAL SHEETS
N.J.	FS-BR-0040 (168)		

STRUCTURE NO. 2004-164

ROUTE 22 OVER CONRAIL AND LIBERTY AVENUE
(FORMERLY STR. NO. 2004-153)

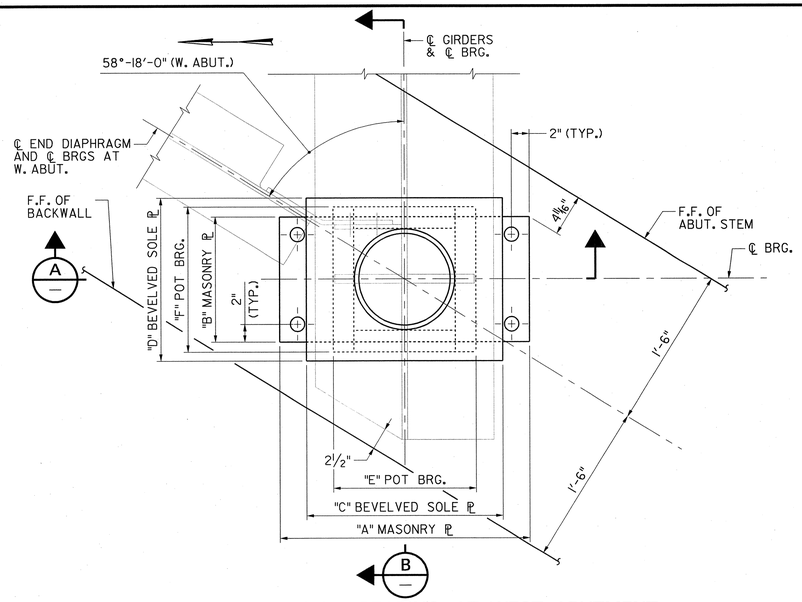

PLAN – EXPANSION BEARING AT WEST ABUTMENT
1 1/2" = 1'-0"

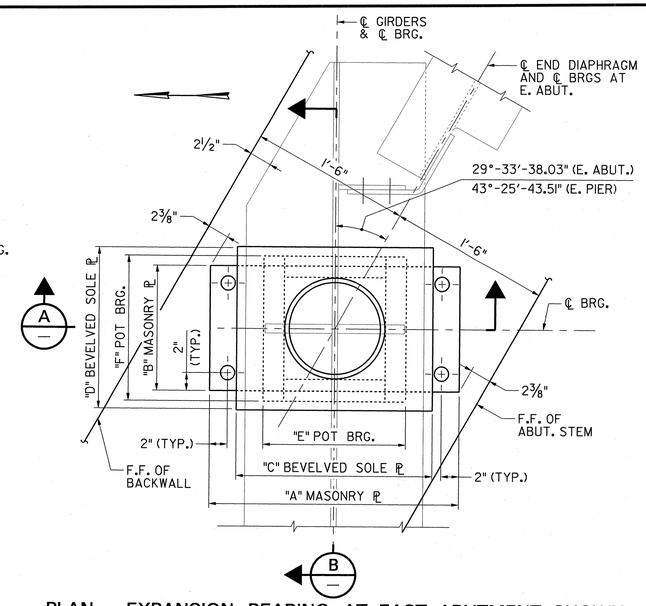

PLAN – EXPANSION BEARING AT EAST ABUTMENT SHOWN
EAST PIER SIMILAR
1 1/2" = 1'-0"

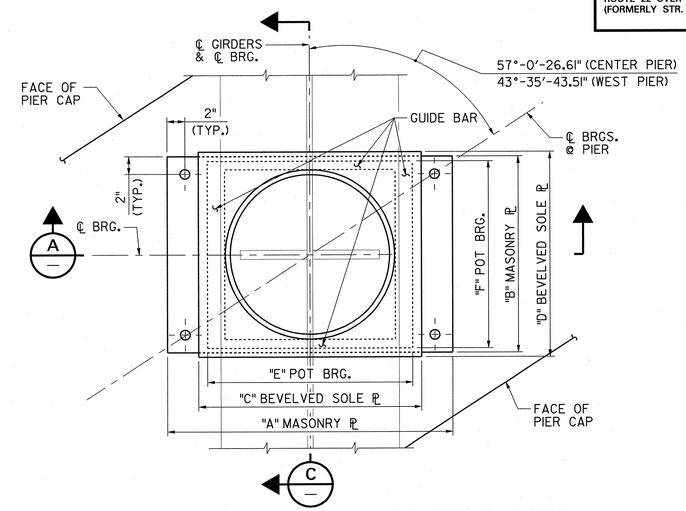

PLAN – FIXED BEARING AT CENTER PIER SHOWN
WEST PIER SIMILAR
1 1/2" = 1'-0"

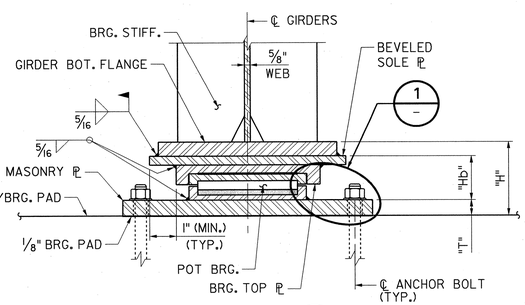

SECTION A
1 1/2" = 1'-0"

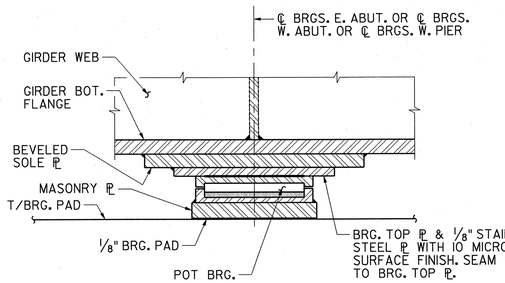

SECTION B
1 1/2" = 1'-0"

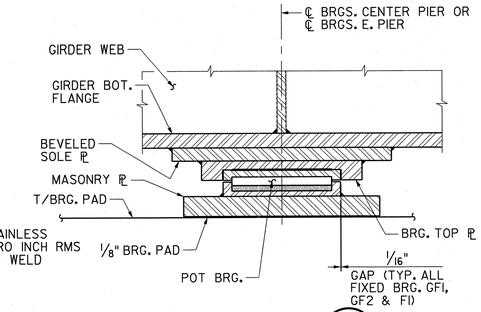

SECTION C
1 1/2" = 1'-0"

NOTES:

1. FOR ADDITIONAL NOTES, SEE SH. B37.
2. IN PREPARING THE CONCRETE PAD AND IN TAPERING THE SOLE PLATE THE CONTRACTOR SHALL TAKE INTO ACCOUNT FABRICATION TOLERANCES OF THE BEARINGS AND THE GIRDERS, AND BE AWARE OF ANGLES CHANGES OF THE SOLE PLATES AND BEARINGS DUE TO THE IMPOSITION OF DEAD LOADS. UNDER FULL DEAD LOAD THE ELASTOMERIC DISC AND THE BOTTOM OF SOLE PLATE SHALL BE LEVEL.

TABLE 1 - DIMENSIONS (IN)

BEARING TYPE	MASONRY PLATE			SOLE PLATE		ASSUMED BEARING DIMS.			TOTAL HGT.
	"A"	"B"	"T"	"C"	"D"	"E"	"F"	"Hb"	"H"
GF1	32.00	22.00	2.00	23.00	22.00	21.00	20.00	4.48	8.11
GF2	32.00	22.00	2.00	22.00	21.00	20.00	19.00	4.02	7.65
F1	32.00	22.00	2.00	25.00	23.00	23.00	21.00	5.30	8.93
E1	28.25	14.00	2.00	22.00	20.00	16.75	16.25	4.07	7.70
E2	28.00	14.00	2.00	20.00	20.00	16.75	16.25	4.07	7.70
E3	32.00	22.00	2.00	23.00	24.00	20.75	21.50	4.92	8.55
E4	32.00	22.00	2.00	21.00	24.00	19.00	20.25	4.71	8.34
GE1	28.00	14.00	2.00	21.00	20.00	18.00	17.25	4.27	7.90
GE2	32.00	22.00	2.00	25.00	24.00	22.25	20.25	4.85	8.48

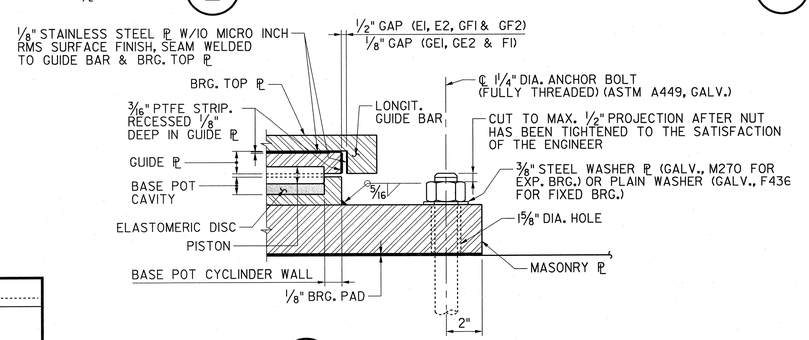

DETAIL 1 EXPANSION BEARING SHOWN
N.T.S. FIXED BEARING SIMILAR

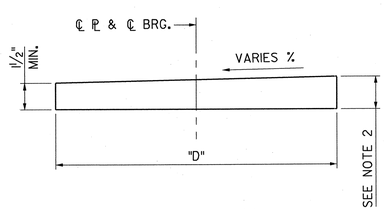

BEVELED SOLE PLATE DETAIL
3" = 1'-0"

1 1/2" = 1'-0"
3" = 1'-0"

CONTROL SECTION		JOB NO.	
DES. BY	L. LAU	CHK. BY	M. CHEN
DWN. BY	F. SKROBOT		
EST. BY	C. MANJUNATH	CHK. BY	M. CHEN
SPECS. BY	B. KARALIUS		
IN CHARGE OF	B. KARALIUS		

REVISION	BY	CKD.	DATE

NEW JERSEY DEPARTMENT OF TRANSPORTATION
BUREAU OF STRUCTURAL ENGINEERING

BEARING DETAILS – 3

ROUTE 22 LIBERTY AVENUE & CONRAIL BRIDGE
CONTRACT NO. 057009080

HILLSIDE TOWNSHIP
MUNICIPALITY

UNION
COUNTY

PB AMERICAS, INC.
CERTIFICATION OF AUTHORIZATION NO. 24GA28029800
BRUCE J. KARALIUS
NEW JERSEY PROFESSIONAL ENGINEER LICENSE NO. 26369

SCALE: AS SHOWN

BRIDGE SHEET NO. B39 of B128

146

PARSONS BRINCKERHOFF CADD DATA
OPERATOR mar-uama
PLOT DATE 01-DEC-2009 14:24
PENTABLE str-full.tbl
DESIGN FILE T:\00404\struc\Bridge\br01c.dgn

STATE	FEDERAL PROJECT NO.	SHEET	TOTAL SHEETS
N.J.	FS-BR-0040 (168)		

STRUCTURE NO. 2004-164

ROUTE 22 OVER CONRAIL AND LIBERTY AVENUE
(FORMERLY STR. NO. 2004-153)

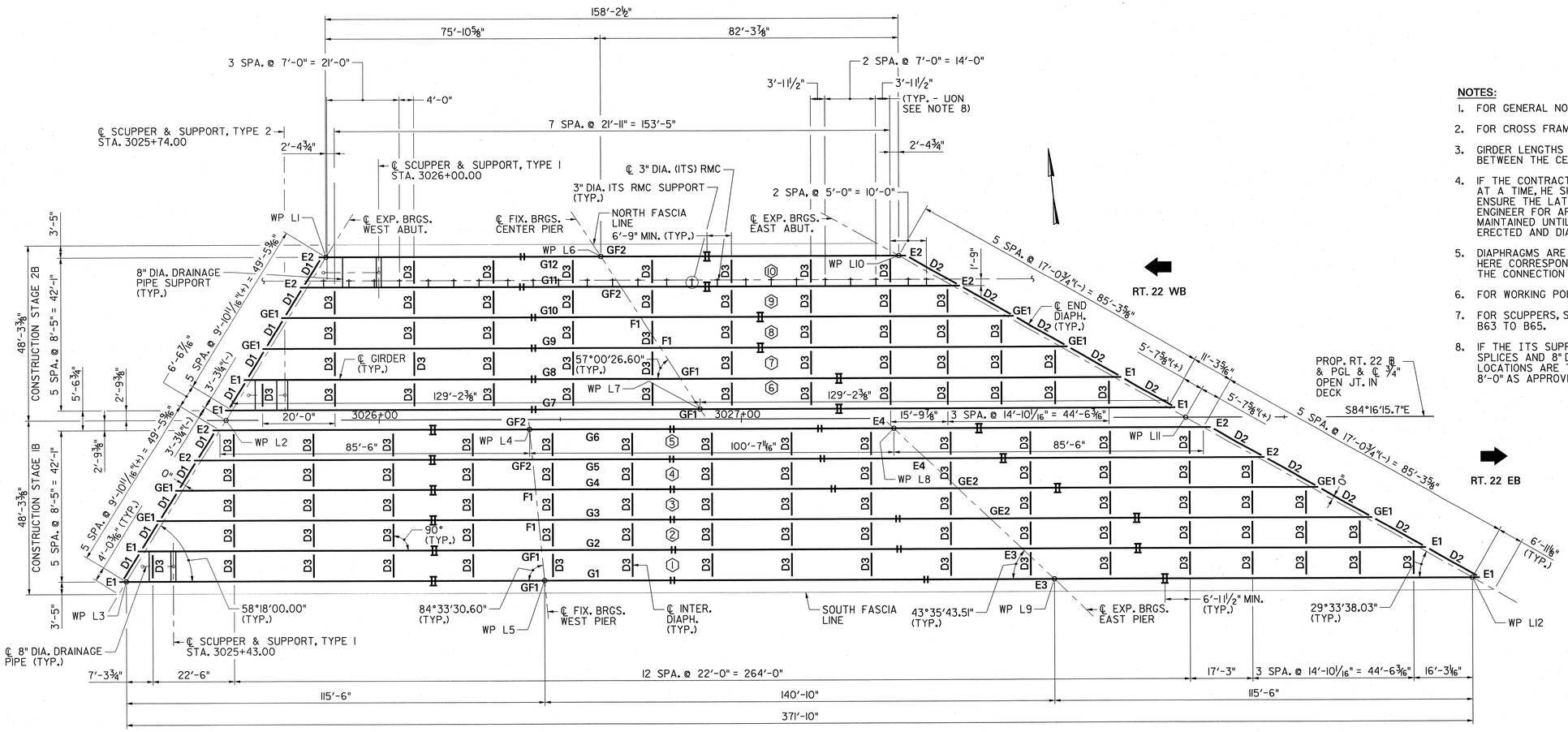

PLAN

1/16" = 1'-0"

TOP OF STEEL ELEVATIONS

GIRDER	CL BRGS. W. ABUT.	CL BRGS. W. PIER	CL BRGS. CTR. PIER	CL BRGS. E. PIER	CL BRGS. E. ABUT.
G1	97.29	99.92	-	100.77	99.52
G2	97.77	100.25	-	101.12	100.08
G3	98.26	100.53	-	101.42	100.63
G4	98.64	100.76	-	101.66	101.05
G5	99.02	100.99	-	101.89	101.43
G6	99.39	101.21	-	102.11	101.79
G7	99.42	-	101.70	-	101.81
G8	99.79	-	101.89	-	102.13
G9	100.15	-	102.08	-	102.42
G10	100.51	-	102.26	-	102.68
G11	100.34	-	101.87	-	102.39
G12	100.26	-	101.61	-	102.17

TOP OF STEEL ELEVATIONS ARE IN FEET AND ARE AT THE TOP OF TOP FLANGE.

NOTES:

1. FOR GENERAL NOTES, SEE SH. B4.
2. FOR CROSS FRAME AND DIAPHRAGM DETAILS, SEE SHS. B48 & B49.
3. GIRDER LENGTHS ARE MEASURED IN THE HORIZONTAL PLANE, BETWEEN THE CENTERLINE OF BEARINGS.
4. IF THE CONTRACTOR CHOOSES TO ERECT THE GIRDERS ONE AT A TIME, HE SHALL SUBMIT THE NECESSARY DETAILS, TO ENSURE THE LATERAL STABILITY OF THE FIRST GIRDER, TO THE ENGINEER FOR APPROVAL. THE STABILIZING MEASURES SHALL BE MAINTAINED UNTIL AT LEAST TWO GIRDERS IN A SPAN ARE ERECTED AND DIAPHRAGMS ARE CONNECTED.
5. DIAPHRAGMS ARE DEPICTED GRAPHICALLY. THE SPACING SHOWN HERE CORRESPONDS TO THE LOCATION OF THE CENTERLINE OF THE CONNECTION PLATE.
6. FOR WORKING POINT INFORMATION, SEE SH. B7.
7. FOR SCUPPERS, SUPPORTS AND PIPE LAYOUT, SEE SHS. B63 TO B65.
8. IF THE ITS SUPPORTS HAVE ANY CONFLICTS TO THE FIELD SPLICES AND 8" DIA DRAINAGE PIPE SUPPORTS, THE SUPPORT LOCATIONS ARE TO BE ADJUSTED FOR A MAX SPACING OF 8'-0" AS APPROVED BY THE ENGINEER.

LEGEND:

(1)	BAY NUMBER
GE	EXP. ALIGN. BRG.
F	FIX. ALIGN. BRG.
E	EXP. BRG.
GF	FIX. BRG.
G1	GIRDER DESIGNATION
D1	DIAPHRAGM DESIGNATION
II	FIELD SPLICE
II	OPTIONAL FIELD SPLICE

PARSONS BRINCKERHOFF CADD DATA

OPERATOR	marquema
PLOT DATE	01-DEC-2009 14:24
PENTABLE	str-full.tbl
DESIGN FILE	T:\0404A\struc\Bridge_1\fp01.dgn

CONTROL SECTION		JOB NO.	
DES. BY	L. LAU	CHK. BY	B. KARALIUS
DWN. BY	J. BOGNAR		
EST. BY	C. MANJUNATH	CHK. BY	M. CHEN
SPECS. BY	B. KARALIUS		
IN CHARGE OF	B. KARALIUS		

1/16" = 1'-0" 1'0 2' 4' 8' 16' 32'

REVISION	BY	CKD.	DATE

NEW JERSEY DEPARTMENT OF TRANSPORTATION
BUREAU OF STRUCTURAL ENGINEERING

FRAMING PLAN

ROUTE 22 LIBERTY AVENUE & CONRAIL BRIDGE
CONTRACT NO. 057009080

HILLSIDE TOWNSHIP — MUNICIPALITY
UNION — COUNTY

PB AMERICAS, INC.
CERTIFICATION OF AUTHORIZATION NO. 24GA28029800
BRUCE J. KARALIUS
NEW JERSEY PROFESSIONAL ENGINEER LICENSE NO. 26369

SCALE: AS SHOWN

BRIDGE SHEET NO. B40 of B128

147

STATE	FEDERAL PROJECT NO.	SHEET	TOTAL SHEETS
N.J.	FS-BR-0040 (168)		

STRUCTURE NO. 2004-164

ROUTE 22 OVER CONRAIL AND LIBERTY AVENUE
(FORMERLY STR. NO. 2004-153)

STRUCTURAL STEEL NOTES:

1. FOR GENERAL NOTES, SEE SH. B4.
2. WORK THIS DRAWING WITH SHS. B42 TO B49.
3. WELDING SHALL CONFORM TO THE ANSI/AASHTO/AWS BRIDGE WELDING CODE D 1.5 WITH NJDOT AMENDMENTS. WELDING AND NONDESTRUCTIVE TESTING SYMBOLS SHALL CONFORM TO SYMBOLS FOR WELDING, BRAZING AND NONDESTRUCTIVE EXAMINATION AWS A2.4-93.
4. JOINT WELDING PROCEDURES, OVERALL FABRICATION METHODS, AND QUALITY CONTROL INSPECTION PROCEDURE SHALL BE INCLUDED AS WRITTEN PROCEDURE SPECIFICATIONS WITH THE SHOP DRAWING SUBMISSION.

   THE CONTRACTOR SHALL NOTIFY THE ENGINEER AT LEAST 15 DAYS PRIOR TO THE TIME THAT WELDING WILL BE PERFORMED SO THAT A STATE INSPECTOR WILL BE MADE AVAILABLE.
5. OPTIONAL FIELD/SHOP SPLICES ARE SHOWN FOR THE GIRDERS. SPLICES AT THESE LOCATIONS ARE REQUIRED IN ORDER TO COMPLY WITH STANDARD TRANSPORTATION PROCEDURES. IF THE CONTRACTOR SO CHOOSES, THE OPTIONAL FIELD SPLICE CAN BE ELIMINATED IF THE CONTRACTOR IS ABLE TO TRANSPORT THE LONGER LENGTH BEAM.
6. ALLOWANCES SHALL BE MADE IN THE SHOP FOR SHRINKAGE DUE TO WELDING AND BURNING. IF UNEVEN SHRINKAGE IS ANTICIPATED, CAMBER ORDINATES SHALL BE ADJUSTED ACCORDINGLY.
7. ENDS OF ALL GIRDERS SHALL BE GROUND SMOOTH AND PLUMB UNDER FULL DEAD LOAD.
8. FOR BEARING DETAILS, SEE SHS. B37 TO B39.
9. STRUCTURAL STEEL FOR GIRDERS, GIRDER SPLICE AND CONNECTION PLATES SHALL CONFORM TO AASHTO M270, GRADE 50W (ASTM A709, GRADE 50W).
10. TOP FLANGE TENSION ZONE LIMITS APPLY TO LOADING DUE TO WEIGHT OF GIRDER, DIAPHRAGMS, CROSS FRAMES HAUNCHES, DECK SLAB, AND S-I-P FORMS. WELDING OF SUPPORTS FOR SCREED RAILS, STEEL DECK FORMS, FORM SUPPORTS, ETC. WILL NOT BE ALLOWED WITHIN TENSION ZONES.
11. FLANGE AND WEB SHOP SPLICES SHALL BE LOCATED WHERE SHOWN ON PLANS. MINOR CHANGES IN LOCATION, TOGETHER WITH ANY ADDITIONAL SPLICES REQUESTED, SHALL BE SUBJECT TO THE APPROVAL OF THE ENGINEER. LENGTHS OF PLATES SHALL BE CONSISTENT WITH LENGTHS OF PLATES AVAILABLE FROM THE MILL. LOCATION SHALL BE AT POINTS OF REDUCED TENSILE STRESS. WEB SPLICES SHALL BE AT LEAST 12" FROM FLANGE SPLICES AND/OR TRANSVERSE INTERMEDIATE STIFFENER AND/OR CONNECTION PLATES FOR DIAPHRAGMS.
12. FOR TOP AND BOTTOM FLANGES, THE CONTRACTOR MAY, FOR THE PURPOSE OF ELIMINATING BUTT WELDS, EXTEND THE LENGTH OF THE THICKER PLATE TO THE END OF THE NEXT THINNER PLATE OR TO THE END OF THE MEMBER, PROVIDED THE MAXIMUM PLATE THICKNESS DOES NOT EXCEED 1.5 TIMES THE THICKNESS OF THE THINNER PLATE PLUS 3/8", SUBJECT TO APPROVAL BY THE ENGINEER. IF THE CONTRACTOR INCREASES THE THICKNESS OF THE BOTTOM FLANGE PLATE AT A BEARING LOCATION, HE SHALL MAINTAIN THE ORIGINAL GIRDER ELEVATION BY MAKING SUITABLE CHANGES IN THE ELEVATION OF THE CONCRETE MASONRY.
13. FLANGE AND WEB SHOP SPLICES ARE TO BE COMPLETED AND WELDMENTS INSPECTED BEFORE FITTING AND WELDING FLANGES TO WEBS. FABRICATION METHODS WHICH MAY BE REQUIRED FOR SPECIAL CONDITIONS, SHALL BE INCLUDED IN THE WRITTEN WELDING AND PROCEDURE SPECIFICATIONS OF THE SHOP PLANS.
14. THE CONTRACTOR IS RESPONSIBLE FOR DETAILING THE STEEL BEAMS, CROSS FRAMES AND DIAPHRAGMS, USING "FULL DEAD LOAD FIT", ACCOUNTING FOR THE MANNER IN WHICH THE BRIDGE WAS DESIGNED. THE BRIDGE WAS DESIGNED SUCH THAT DIAPHRAGMS AND CROSS FRAMES ARE ENGAGED (I.E., THEY ARE CONNECTED TO THE GIRDERS WITH FULLY TIGHTENED BOLTS) PRIOR TO PLACING THE DECK SLAB. THE CONTRACTOR NEEDS TO ACCOUNT FOR DEFLECTIONS AND ROTATIONS OF THE GIRDERS SUCH THAT, UNDER FULL DEAD LOAD, CONNECTION PLATES AND BEARING STIFFENERS ARE PLUMB AND THE GIRDER WEBS ARE VERTICAL.

ERECTION NOTES:

1. ALL DIAPHRAGM AND CROSS FRAME CONNECTIONS TO GIRDERS SHALL BE FULLY TIGHTENED IN STANDARD HOLES PRIOR TO THE DEAD LOADS BEING PLACED. IF REQUIRED, A TEMPORARY SUPPORT SYSTEM SHALL BE PROVIDED TO ENSURE THE LATERAL STABILITY OF THE GIRDERS.
2. FIELD ELONGATION OR ENLARGEMENT OF HOLES WILL NOT BE ALLOWED.
3. DURING ERECTION OF GIRDERS, THE CONTRACTOR SHALL BE FULLY RESPONSIBLE FOR THE STABILITY OF ALL GIRDERS AND CROSS FRAMES. FOR THE ERECTION OF THE GIRDERS LARGE CRANES, TEMPORARY SHORING OR JACKING FRAMES MAY BE REQUIRED. THE CONTRACTOR SHALL PROVIDE A CONSTRUCTION PLAN THAT DETAILS THE PROCEDURES FOR FABRICATION, ERECTION, AND DECK PLACEMENT. THE WORKING DRAWINGS SHALL BE STAMPED BY A PROFESSIONAL ENGINEER LICENSED IN THE STATE OF NEW JERSEY AND NEED TO BE APPROVED BY THE RESIDENT ENGINEER.

QUANTITIES

ITEM NO.	DESCRIPTION	UNIT	CONTRACT QUANTITIES STAGE 1B	CONTRACT QUANTITIES STAGE 2B
506003P	STRUCTURAL STEEL	LS	LUMP SUM	LUMP SUM
506012P	SHEAR CONNECTORS	UNIT	8,950	5,950
701015P	3" RIGID METALLIC CONDUIT	LF	-	180

REVISION	BY	CKD.	DATE

CONTROL SECTION		JOB NO.	
DES. BY	L. LAU	CHK. BY	B. KARALIUS
DWN. BY	M. P. MARUE		
EST. BY	C. MANJUNATH	CHK. BY	M. CHEN
SPECS. BY	B. KARALIUS		
IN CHARGE OF	B. KARALIUS		

NEW JERSEY DEPARTMENT OF TRANSPORTATION
BUREAU OF STRUCTURAL ENGINEERING

STEEL GIRDER GENERAL NOTES AND QUANTITIES

ROUTE 22 LIBERTY AVENUE & CONRAIL BRIDGE
CONTRACT NO. 057009080

HILLSIDE TOWNSHIP — MUNICIPALITY
UNION — COUNTY

PB AMERICAS, INC.
CERTIFICATION OF AUTHORIZATION NO. 24GA28029800
BRUCE J. KARALIUS
NEW JERSEY PROFESSIONAL ENGINEER LICENSE NO. 26369

SCALE: AS SHOWN

BRIDGE SHEET NO. B41 of B128

148

PARSONS BRINCKERHOFF CADD DATA
OPERATOR maruema
PLOT DATE 04-DEC-2009 14:24
PENTABLE strfull.tbl
DESIGN FILE T:\0040A\strucBridge.1\pg01a.dgn

STATE	FEDERAL PROJECT NO.	SHEET	TOTAL SHEETS
N.J.	FS-BR-0040 (168)		

STRUCTURE NO. 2004-164

ROUTE 22 OVER CONRAIL AND LIBERTY AVENUE
(FORMERLY STR. NO. 2004-153)

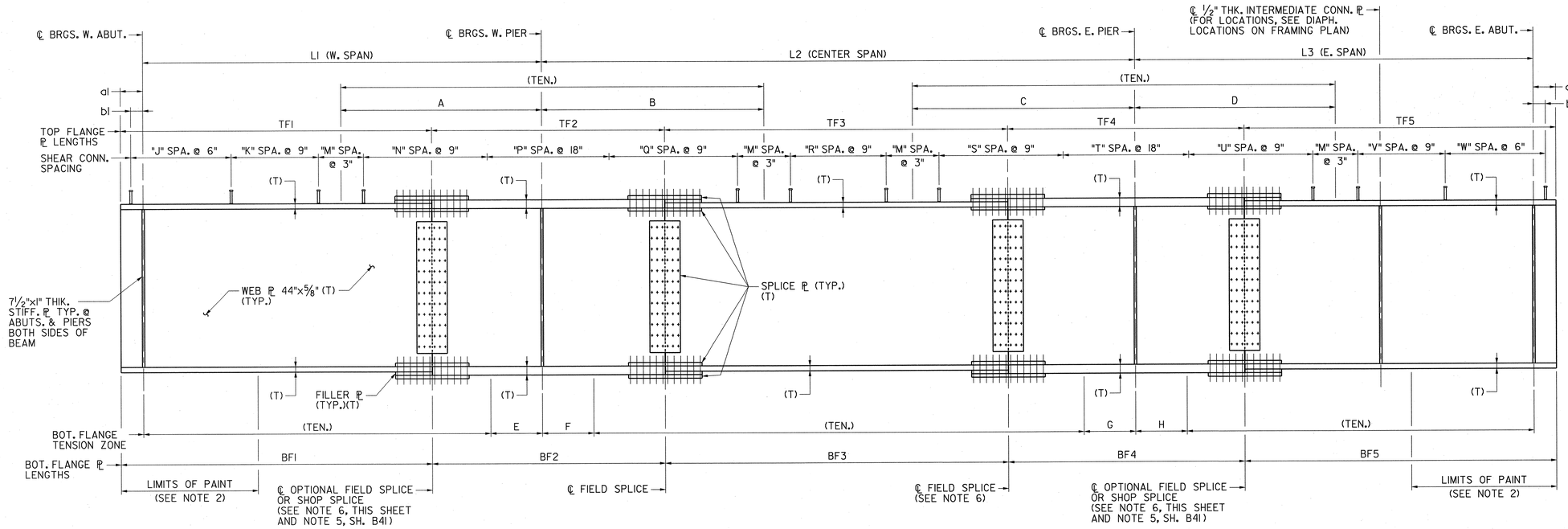

EB TYPICAL GIRDER ELEVATION

N.T.S.

NOTES:

1. FOR ADDITIONAL NOTES SEE SHS. B41 & B44.
2. ALL STRUCTURAL STEEL, DIAPHRAGMS, HANGER SUPPORTS AND CONNECTION PLATES, FOR A DISTANCE OF THREE TIMES THE DEPTH OF THE GIRDERS FROM THE ENDS OF THE GIRDER SHALL BE CLEANED AND PAINTED AS PER THE STANDARD SPECIFICATIONS. THE COLOR SHALL BE BROWN; COATING SYSTEM TO BE IEU. THE COST OF PAINTING STEEL SHALL BE INCLUDED IN PAY ITEM "STRUCTURAL STEEL, GRADE 50W".
3. FOR LOCATIONS OF SPLICES WHERE SHEAR CONNECTORS ARE REQUIRED, SEE NOTE 1 ON GIRDER DETAILS DRAWING SH. B44.
4. SHEAR CONNECTOR LAYOUT IS TO BE REVISED SO AS TO MISS SPLICE PLATE BOLTS.
5. FLANGE PLATE LENGTH (TF_AND BF_) IS THE DISTANCE MEASURED TO THE CENTERLINE OF FIELD SPLICE (OR THE CENTERLINE OF OPTIONAL FIELD SPLICE). THE ACTUAL PLATE LENGTH IS OBTAINED BY SUBTRACTING THE GAP AT EACH SPLICE LOCATION (SEE GIRDER SPLICE DETAIL DRAWING).
6. BOLT LAYOUT AT SPLICES ARE SHOWN SCHEMATICALLY. FOR ACTUAL LAYOUT (NUMBERING AND SPACING OF BOLTS) SEE SH. B45.

LEGEND:

(TEN.) LIMITS OF TENSION ZONE (SEE NOTE 10) ON SH. B41.

(T) SHALL COMPLY WITH SUPPLEMENTARY REQUIREMENTS FOR NOTCH TOUGHNESS.

TABLE 1 - EASTBOUND

PLATE DIMENSIONS

GIRDER DESIGNATION	SPAN LENGTH			TF1		TF2		TF3		TF4		TF5		BF1		BF2		BF3		BF4		BF5	
	L1	L2	L3	SIZE	LENGTH	SIZE	LENGTH	SIZE	LENGTH	SIZE	LENGTH	SIZE	LENGTH	SIZE	LENGTH	SIZE	LENGTH	SIZE	LENGTH	SIZE	LENGTH	SIZE	LENGTH
G1	115'-6"	140'-10"	115'-6"	20" x 1 3/8"	86'-2 3/4"	20" x 2 1/2"	66'-0"	20" x 1 3/8"	70'-0 1/2"	20" x 2 1/2"	66'-0"	20" x 1 3/8"	87'-5 3/4"	20" x 1 1/2"	86'-2 3/4"	20" x 2 1/2"	66'-0"	20" x 1 1/2"	70'-0 1/2"	20" x 2 1/2"	66'-0"	20" x 1 1/2"	87'-5 3/4"
G2	109'-6"	132'-9 9/16"	109'-6"	20" x 1 3/8"	80'-7 1/4"	20" x 2 1/2"	66'-0"	20" x 1 3/8"	62'-4"	20" x 2 1/2"	66'-0"	20" x 1 3/8"	79'-10 5/16"	20" x 1 1/2"	80'-7 1/4"	20" x 2 1/2"	66'-0"	20" x 1 1/2"	62'-4"	20" x 2 1/2"	66'-0"	20" x 1 1/2"	79'-10 5/16"
G3	103'-6"	124'-9 1/16"	103'-6"	18" x 1 1/4"	75'-5"	18" x 2"	66'-0"	18" x 1 1/4"	62'-4"	18" x 2"	66'-0"	18" x 1 1/4"	65'-0 1/16"	18" x 1 3/8"	75'-5"	18" x 2"	66'-0"	18" x 1 3/8"	62'-4"	18" x 2"	66'-0"	18" x 1 3/8"	65'-0 1/16"
G4	97'-6"	116'-8 5/8"	97'-6"	18" x 1 1/4"	70'-2 5/8"	18" x 2"	66'-0"	18" x 1 1/4"	44'-6"	18" x 2"	62'-0"	18" x 1 1/4"	72'-0"	18" x 1 3/8"	70'-3 5/8"	18" x 2"	66'-0"	18" x 1 3/8"	44'-6"	18" x 2"	62'-0"	18" x 1 3/8"	72'-0"
G5	91'-6"	108'-8 3/16"	91'-6"	16" x 1 1/4"	64'-10 3/4"	16" x 2"	66'-0"	16" x 1 1/4"	41'-7 3/4"	16" x 2"	50'-0"	16" x 1 1/4"	72'-1 11/16"	16" x 1 3/8"	64'-10 3/4"	16" x 2"	66'-0"	16" x 1 3/8"	41'-7 3/4"	16" x 2"	50'-0"	16" x 1 3/8"	72'-1 11/16"
G6	85'-6"	100'-7 11/16"	85'-6"	16" x 1 1/4"	59'-10"	16" x 2"	66'-0"	16" x 1 1/4"	40'-10"	16" x 2"	44'-0"	16" x 1 1/4"	63'-11 11/16"	16" x 1 3/8"	59'-10"	16" x 2"	66'-0"	16" x 1 3/8"	40'-10"	16" x 2"	44'-0"	16" x 1 3/8"	63'-11 11/16"

TABLE 2 - EASTBOUND

GIRDER DESIGNATION	DIMENSIONS				LIMITS OF TOP FLANGE TENSION ZONE				DIMENSIONS				NO. OF SHEAR CONNECTOR SPACES												
	a1	a2	b1	b2	A	B	C	D	E	F	G	H	"J"	"K"	"M"	"N"	"P"	"Q"	"R"	"S"	"T"	"U"	"V"	"W"	QTY.
G1	1'-5"	2'-6"	1'-0"	1'-8"	44'-0"	49'-0"	48'-0"	43'-0"	22'-0"	24'-0"	25'-0"	22'-0"	48 spa @ 6" = 24 ft	60 spa @ 9" = 45 ft	24 spa @ 3" = 6 ft	39 spa @ 9" = 29 ft	18 spa @ 18" = 27 ft	42 spa @ 9" = 32 ft	48 spa @ 9" = 36 ft	42 spa @ 9" = 32 ft	18 spa @ 18" = 27 ft	38 spa @ 9" = 29 ft	61 spa @ 9" = 46 ft	50 spa @ 6" = 25 ft	1683
G2	1'-0"	2'-0"	9"	1'-8"	40'-0"	44'-0"	43'-0"	40'-0"	21'-0"	24'-0"	23'-0"	22'-0"	45 spa @ 6" = 23 ft	59 spa @ 9" = 44 ft	24 spa @ 3" = 6 ft	35 spa @ 9" = 26 ft	17 spa @ 18" = 26 ft	38 spa @ 9" = 29 ft	51 spa @ 9" = 38 ft	35 spa @ 9" = 26 ft	17 spa @ 18" = 26 ft	35 spa @ 9" = 26 ft	58 spa @ 9" = 44 ft	47 spa @ 6" = 24 ft	1602
G3	1'-0"	2'-0"	9"	1'-6"	37'-0"	41'-0"	38'-0"	39'-0"	19'-0"	22'-0"	20'-0"	19'-0"	42 spa @ 6" = 21 ft	57 spa @ 9" = 43 ft	24 spa @ 3" = 6 ft	31 spa @ 9" = 23 ft	16 spa @ 18" = 24 ft	34 spa @ 9" = 26 ft	51 spa @ 9" = 38 ft	31 spa @ 9" = 23 ft	16 spa @ 18" = 24 ft	34 spa @ 9" = 26 ft	54 spa @ 9" = 41 ft	44 spa @ 6" = 22 ft	1521
G4	1'-0"	2'-0"	9"	1'-6"	34'-0"	39'-0"	35'-0"	36'-0"	18'-0"	19'-0"	18'-0"	18'-0"	40 spa @ 6" = 20 ft	54 spa @ 9" = 41 ft	24 spa @ 3" = 6 ft	29 spa @ 9" = 22 ft	15 spa @ 18" = 23 ft	32 spa @ 9" = 24 ft	48 spa @ 9" = 36 ft	27 spa @ 9" = 20 ft	15 spa @ 18" = 23 ft	32 spa @ 9" = 24 ft	50 spa @ 9" = 38 ft	42 spa @ 6" = 21 ft	1443
G5	1'-0"	2'-0"	9"	1'-7"	33'-0"	38'-0"	34'-0"	35'-0"	16'-0"	18'-0"	16'-0"	17'-0"	38 spa @ 6" = 19 ft	49 spa @ 9" = 37 ft	24 spa @ 3" = 6 ft	28 spa @ 9" = 21 ft	14 spa @ 18" = 21 ft	32 spa @ 9" = 24 ft	40 spa @ 9" = 30 ft	27 spa @ 9" = 20 ft	14 spa @ 18" = 21 ft	31 spa @ 9" = 23 ft	45 spa @ 9" = 34 ft	40 spa @ 6" = 20 ft	1365
G6	1'-0"	2'-0"	9"	1'-5"	32'-0"	38'-0"	36'-0"	34'-0"	14'-0"	16'-0"	15'-0"	16'-0"	35 spa @ 6" = 18 ft	44 spa @ 9" = 33 ft	24 spa @ 3" = 6 ft	28 spa @ 9" = 21 ft	13 spa @ 18" = 20 ft	33 spa @ 9" = 25 ft	26 spa @ 9" = 20 ft	31 spa @ 9" = 23 ft	13 spa @ 18" = 20 ft	30 spa @ 9" = 23 ft	41 spa @ 9" = 31 ft	37 spa @ 6" = 19 ft	1284

REVISION	BY	CKD.	DATE

NEW JERSEY DEPARTMENT OF TRANSPORTATION
BUREAU OF STRUCTURAL ENGINEERING

EASTBOUND GIRDER SCHEDULE

ROUTE 22 LIBERTY AVENUE & CONRAIL BRIDGE
CONTRACT NO. 057009080

HILLSIDE TOWNSHIP
MUNICIPALITY

UNION
COUNTY

PB AMERICAS, INC.
CERTIFICATION OF AUTHORIZATION NO. 24GA28029800

BRUCE J. KARALIUS
NEW JERSEY PROFESSIONAL ENGINEER LICENSE NO. 26369

SCALE: AS SHOWN

BRIDGE SHEET NO. B42 of B128

149

CONTROL SECTION		JOB NO.	
DES. BY	L. LAU	CHK. BY	B. KARALIUS
DWN. BY	M. P. MARUE		
EST. BY	C. MANJUNATH	CHK. BY	M. CHEN
SPECS. BY	B. KARALIUS		
IN CHARGE OF	B. KARALIUS		

PARSONS BRINCKERHOFF CADD DATA
OPERATOR marruema
PLOT DATE 01-DEC-2009 14:24
PENTABLE strfull.tbl
DESIGN FILE T:\0040\struc\Bridge_1\pg01_b.dgn

STATE	FEDERAL PROJECT NO.	SHEET	TOTAL SHEETS
N.J.	FS-BR-0040 (168)		

STRUCTURE NO. 2004-164

ROUTE 22 OVER CONRAIL AND LIBERTY AVENUE
(FORMERLY STR. NO. 2004-153)

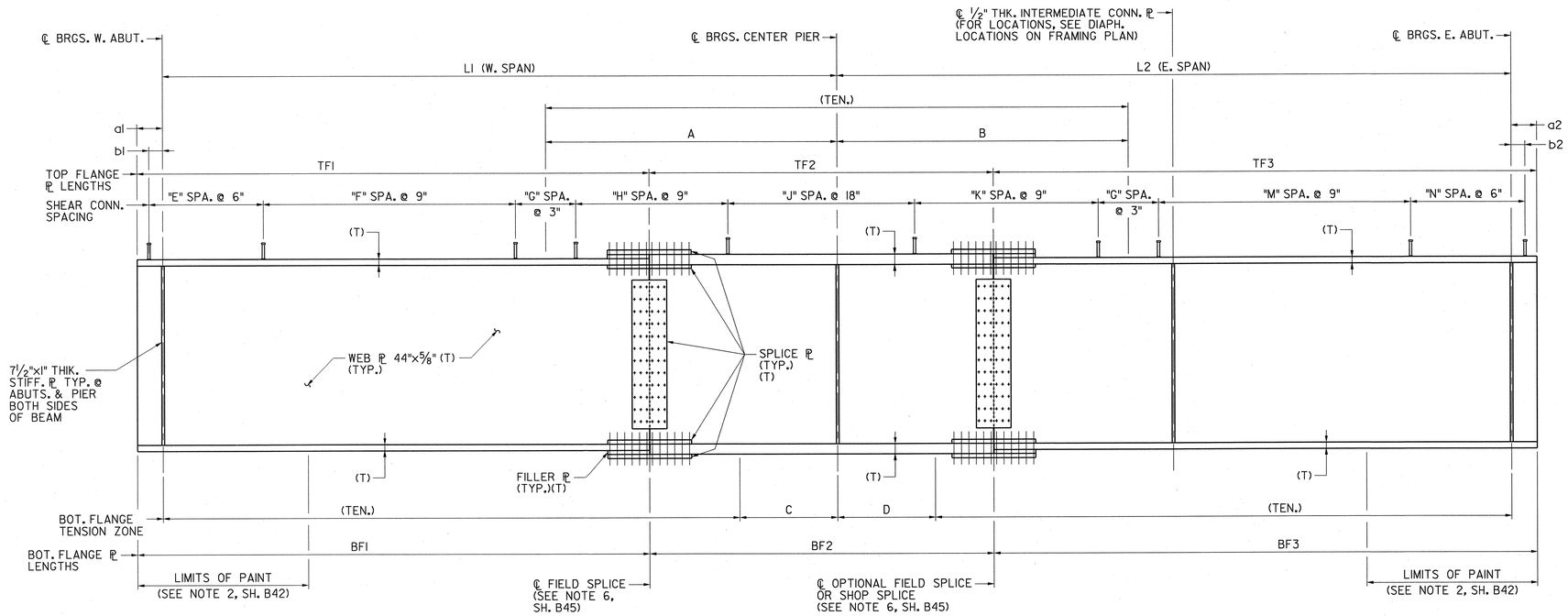

WB TYPICAL GIRDER ELEVATION

N.T.S.

NOTES:

1. FOR NOTES SEE SH. B42.

LEGEND:

(TEN.) LIMITS OF TENSION ZONE (SEE NOTE 11) ON SH. B41.

(T) SHALL COMPLY WITH SUPPLEMENTARY REQUIREMENTS FOR NOTCH TOUGHNESS.

TABLE 3 - WESTBOUND

GIRDER DESIGNATION	SPAN LENGTH		PLATE DIMENSIONS TF1		TF2		TF3		BF1		BF2		BF3	
	L1	L2	SIZE	LENGTH	SIZE	LENGTH	SIZE	LENGTH	SIZE	LENGTH	SIZE	LENGTH	SIZE	LENGTH
G7	129'-2 3/8"	129'-2 3/8"	20" x 1 3/8"	84'-2 5/8"	20" x 2 1/2"	84'-4 1/4"	20" x 1 3/8"	92'-9 7/8"	20" x 1 1/2"	84'-2 5/8"	20" x 2 3/4"	84'-4 1/4"	20" x 1 1/2"	92'-9 7/8"
G8	118'-6 7/16"	119'-9 7/8"	20" x 1 3/8"	79'-0"	20" x 2 1/2"	84'-4 1/4"	20" x 1 3/8"	78'-0 1/16"	20" x 1 1/2"	79'-0"	20" x 2 1/2"	84'-4 1/4"	20" x 1 1/2"	78'-0 1/16"
G9	107'-10 1/2"	110'-5 3/8"	18" x 1 1/4"	73'-10"	18" x 2 1/2"	62'-8"	18" x 1 1/4"	84'-9 7/8"	18" x 1 3/8"	73'-10"	18" x 2 1/2"	62'-8"	18" x 1 3/8"	84'-9 7/8"
G10	97'-2 9/16"	101'-0 7/8"	18" x 1 1/4"	68'-7 1/2"	18" x 2 1/2"	62'-8"	18" x 1 1/4"	69'-11 15/16"	18" x 1 3/8"	68'-7 1/2"	18" x 2 1/2"	62'-8"	18" x 1 3/8"	69'-11 15/16"
G11	86'-6 5/8"	91'-8 3/8"	16" x 1 1/4"	60'-3"	16" x 2"	51'-0"	16" x 1 1/4"	70'-0"	16" x 1 1/4"	60'-3"	16" x 2"	51'-0"	16" x 1 1/4"	70'-0"
G12	75'-10 5/8"	82'-3 7/8"	16" x 1 1/4"	55'-8"	16" x 2"	51'-0"	16" x 1 1/4"	55'-5 1/2"	16" x 1 1/4"	55'-8 "	16" x 2"	51'-0"	16" x 1 1/4"	55'-5 1/2"

TABLE 4 - WESTBOUND

GIRDER DESIGNATION	DIMENSIONS				LIMITS OF TOP FLANGE TENSION ZONE		DIMENSIONS		NO. OF SHEAR CONNECTOR SPACES								
	a1	a2	b1	b2	A	B	C	D	"E"	"F"	"G"	"H"	"J"	"K"	"M"	"N"	QTY.
G7	1'-0"	2'-0"	9"	1'-4"	49'-0"	47'-0"	28'-0"	28'-0"	53 SPA @ 6" = 27 FT	68 SPA @ 9" = 51 FT	24 SPA @ 3" = 6 FT	45 SPA @ 9" = 34 FT	17 SPA @ 18" = 26 FT	42 SPA @ 9" = 32 FT	71 SPA @ 9" = 53 FT	54 SPA @ 6" = 27 FT	1197
G8	1'-0"	2'-0"	9"	1'-2"	44'-0"	45'-0"	24'-0"	25'-0"	49 SPA @ 6" = 25 FT	64 SPA @ 9" = 48 FT	24 SPA @ 3" = 6 FT	40 SPA @ 9" = 30 FT	15 SPA @ 18" = 23 FT	41 SPA @ 9" = 31 FT	64 SPA @ 9" = 48 FT	49 SPA @ 6" = 25 FT	1113
G9	1'-0"	2'-0"	9"	1'-2"	41'-0"	42'-0"	22'-0"	23'-0"	45 SPA @ 6" = 23 FT	56 SPA @ 9" = 42 FT	24 SPA @ 3" = 6 FT	37 SPA @ 9" = 28 FT	15 SPA @ 18" = 23 FT	37 SPA @ 9" = 28 FT	57 SPA @ 9" = 43 FT	46 SPA @ 6" = 23 FT	1026
G10	1'-0"	2'-0"	9"	1'-0"	37'-0"	39'-0"	20'-0"	20'-0"	40 SPA @ 6" = 20 FT	50 SPA @ 9" = 38 FT	24 SPA @ 3" = 6 FT	33 SPA @ 9" = 25 FT	13 SPA @ 18" = 20 FT	35 SPA @ 9" = 26 FT	52 SPA @ 9" = 39 FT	42 SPA @ 6" = 21 FT	942
G11	1'-0"	2'-0"	9"	1'-0"	34'-0"	34'-0"	17'-0"	18'-0"	36 SPA @ 6" = 18 FT	42 SPA @ 9" = 32 FT	24 SPA @ 3" = 6 FT	31 SPA @ 9" = 23 FT	12 SPA @ 18" = 18 FT	30 SPA @ 9" = 23 FT	48 SPA @ 9" = 36 FT	38 SPA @ 6" = 19 FT	858
G12	1'-5"	2'-6"	1'-0"	1'-4"	34'-0"	34'-0"	17'-0"	18'-0"	33 SPA @ 6" = 17 FT	32 SPA @ 9" = 24 FT	24 SPA @ 3" = 6 FT	33 SPA @ 9" = 25 FT	10 SPA @ 18" = 15 FT	28 SPA @ 9" = 21 FT	39 SPA @ 9" = 29 FT	36 SPA @ 6" = 18 FT	780

REVISION	BY	CKD.	DATE

NEW JERSEY DEPARTMENT OF TRANSPORTATION
BUREAU OF STRUCTURAL ENGINEERING

WESTBOUND GIRDER SCHEDULE

ROUTE 22 LIBERTY AVENUE & CONRAIL BRIDGE
CONTRACT NO. 057009080

HILLSIDE TOWNSHIP — MUNICIPALITY
UNION — COUNTY

PB AMERICAS, INC.
CERTIFICATION OF AUTHORIZATION NO. 24GA28029800
BRUCE J. KARALIUS
NEW JERSEY PROFESSIONAL ENGINEER LICENSE NO. 26369

SCALE: AS SHOWN

BRIDGE SHEET NO. B43 of B128

150

CONTROL SECTION		JOB NO.	
DES. BY	L. LAU	CHK. BY	B. KARALIUS
DWN. BY	M. P. MARUE		
EST. BY	C. MANJUNATH	CHK. BY	M. CHEN
SPECS. BY	B. KARALIUS		
IN CHARGE OF	B. KARALIUS		

PARSONS BRINCKERHOFF CADD DATA
OPERATOR mcruema
PLOT DATE 04-DEC-2009 14:24
PENTABLE STFE4U.tbl
DESIGN FILE s:\00404\struc\Bridge\Vga01u.dgn

STATE	FEDERAL PROJECT NO.	SHEET	TOTAL SHEETS
N.J.	FS-BR-0040 (168)		

STRUCTURE NO. 2004-164

ROUTE 22 OVER CONRAIL AND LIBERTY AVENUE
(FORMERLY STR. NO. 2004-153)

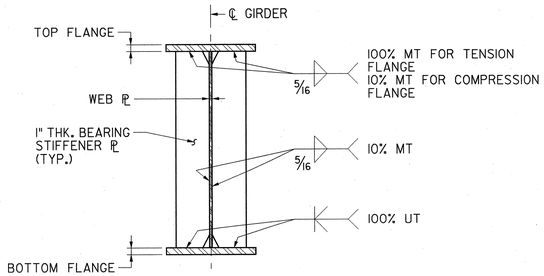

BEARING STIFFENER DETAILS
N.T.S.

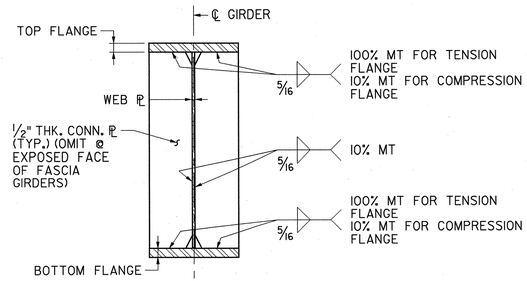

CONNECTION PLATES AT INTERIOR CROSS FRAME LOCATIONS
N.T.S.

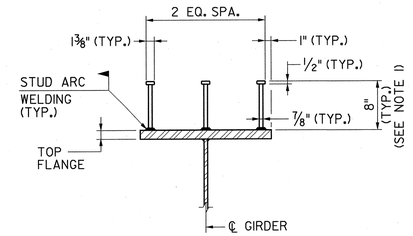

SHEAR CONNECTOR DETAIL
N.T.S.

NOTES:

1. DUE TO BEAM FABRICATION TOLERANCES A STUD HEIGHT OTHER THAN THAT SHOWN MAY BE REQUIRED. AFTER THE BEAMS HAVE BEEN INSTALLED AND THE CONTRACTOR HAS SURVEYED THE TOPS OF THE BEAMS, HE SHALL VERIFY THAT THE 8" HIGH SHEAR STUDS, WHEN INSTALLED, WILL PROTRUDE A MINIMUM OF 2" ABOVE BOTTOM OF DECK SLAB AND SHALL BE A MINIMUM OF 3" BELOW THE TOP OF THE DECK SLAB. IF THE SHEAR STUD DOES NOT MEET THESE REQUIREMENTS HE SHALL PROVIDE ONE THAT DOES.
2. CONNECTION PLATES ARE REQUIRED AT THE INTERIOR CROSS FRAME LOCATIONS. EXACT LOCATION OF CONNECTOR PLATES FOR INTERIOR CROSS FRAMES TO BE DETERMINED BY THE CONTRACTOR IN ACCORDANCE WITH THE SPACING GIVEN ON THE FRAMING PLAN. ORIENTATION OF THE CONNECTOR PLATES SHALL BE PERPENDICULAR TO THE ℄ GIRDER.
3. ALL WELDS ARE SUBJECT TO NONDESTRUCTIVE TESTING UNDER THE QUALITY CONTROL WELDING INSPECTION.

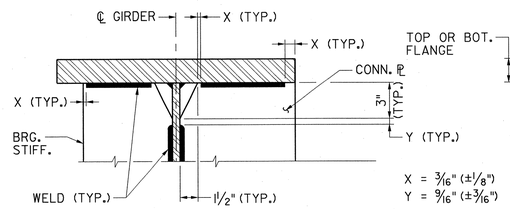

TYPICAL FILLET WELD TERMINATION DETAIL AT BEARING STIFFENERS AND CONNECTION PLATES
N.T.S.

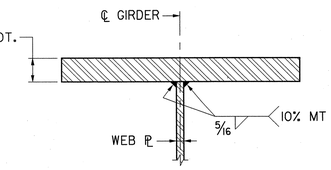

TYPICAL FLANGE TO WEB WELD DETAIL
N.T.S.

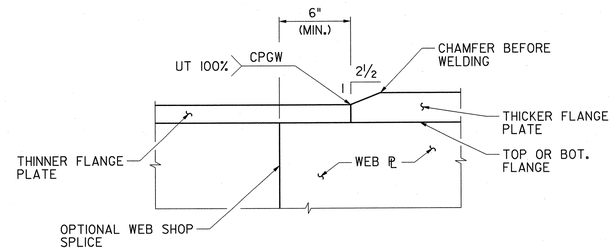

TYPICAL FLANGE TRANSITION WELD DETAIL
N.T.S.

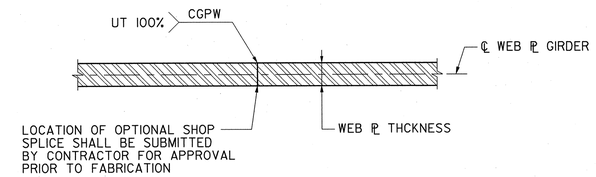

OPTIONAL WEB SPLICE WELD DETAIL
N.T.S.

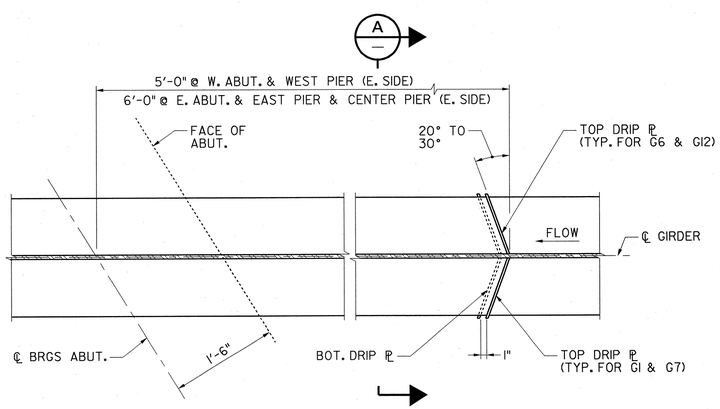

PLAN
N.T.S.

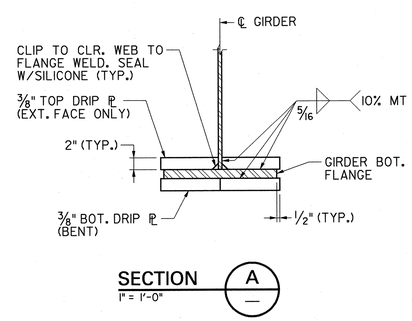

SECTION A
1" = 1'-0"

DRIP PLATE DETAIL FOR FASICA BEAMS G1,G6,G7,G12 AT W. ABUT. SHOWN; E. ABUT. OPPOSITE HAND AND SIMILAR

CONTROL SECTION		JOB NO.	
DES. BY	L. LAU	CHK. BY	B. KARALIUS
DWN. BY	M. P. MARUE		
EST. BY	C. MANJUNATH	CHK. BY	M. CHEN
SPECS. BY	B. KARALIUS		
IN CHARGE OF	B. KARALIUS		

PARSONS BRINCKERHOFF CADD DATA
OPERATOR marruema
PLOT DATE 01-DEC-2009 14:24
PENTABLE stf-full.tbl
DESIGN FILE T:\0404\struc\Bridge\bg01_d.dgn

1" = 1'-0" 1' 6" 0 1' 2'

REVISION	BY	CKD.	DATE

NEW JERSEY DEPARTMENT OF TRANSPORTATION
BUREAU OF STRUCTURAL ENGINEERING

GIRDER DETAILS

ROUTE 22 LIBERTY AVENUE & CONRAIL BRIDGE
CONTRACT NO. 057009080

HILLSIDE TOWNSHIP — MUNICIPALITY
UNION — COUNTY

PB AMERICAS, INC.
CERTIFICATION OF AUTHORIZATION NO. 24GA28029800
BRUCE J. KARALIUS
NEW JERSEY PROFESSIONAL ENGINEER LICENSE NO. 26369

SCALE: AS SHOWN

BRIDGE SHEET NO. B44 of B128

151

STATE	FEDERAL PROJECT NO.	SHEET	TOTAL SHEETS
N.J.	FS-BR-0040 (168)		

STRUCTURE NO. 2004-164

ROUTE 22 OVER CONRAIL AND LIBERTY AVENUE
(FORMERLY STR. NO. 2004-153)

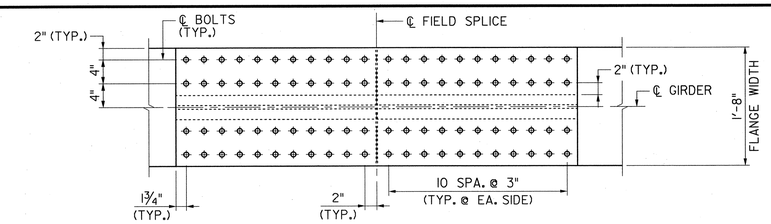

PLAN
1" = 1'-0"

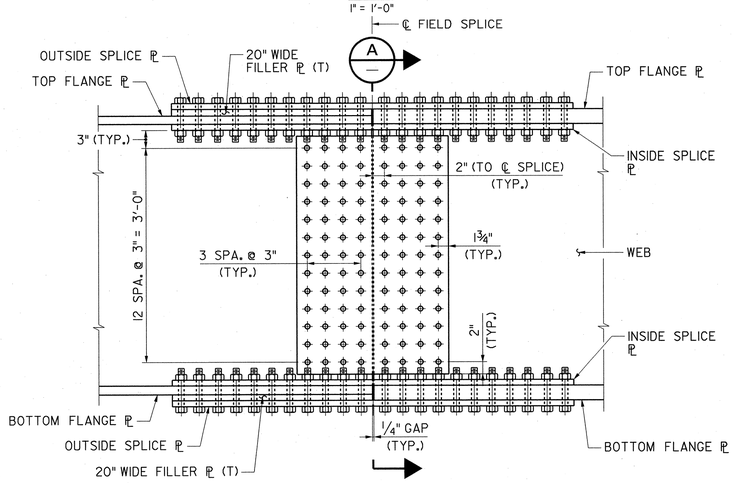

TYPICAL FIELD SPLICE DETAIL FOR GIRDERS G1, G2, G7 & G8
1" = 1'-0"

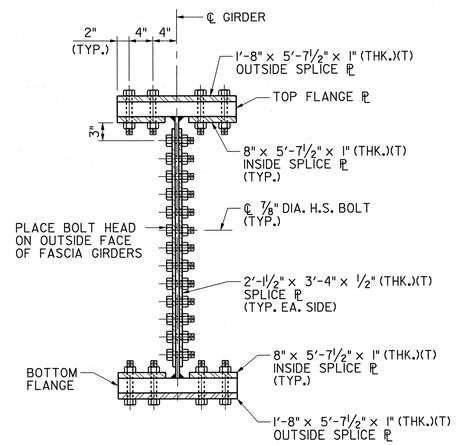

SECTION A
1"=1'-0"

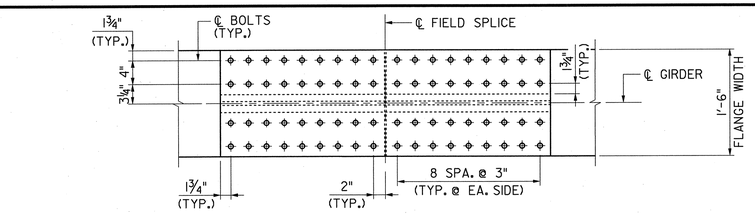

PLAN
1" = 1'-0"

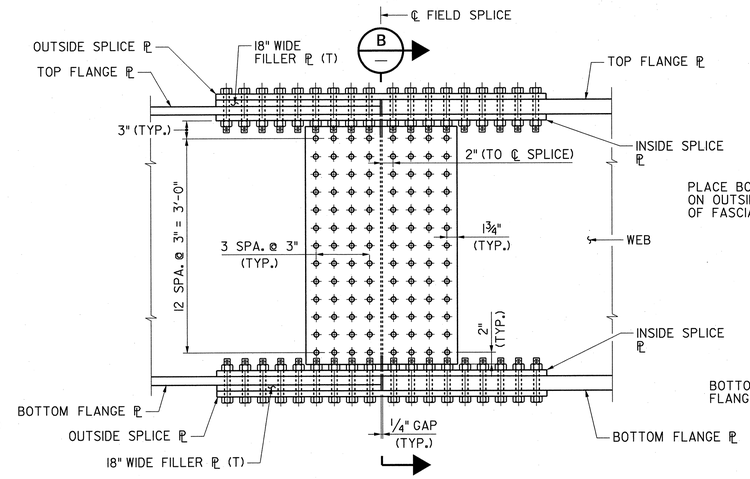

TYPICAL FIELD SPLICE DETAIL FOR GIRDERS G3, G4, G9 & G10
1" = 1'-0"

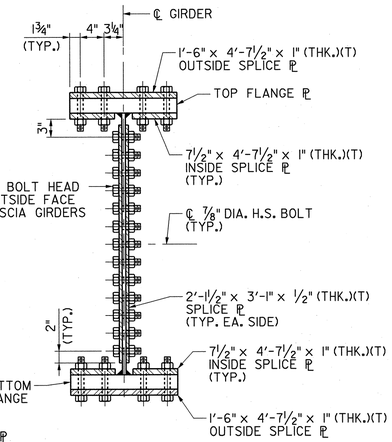

SECTION B
1"=1'-0"

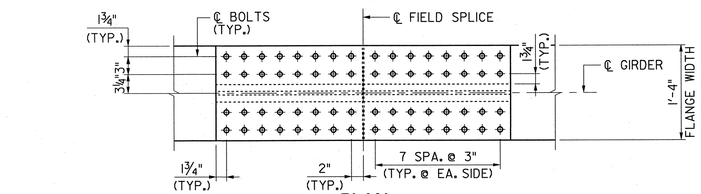

PLAN
1" = 1'-0"

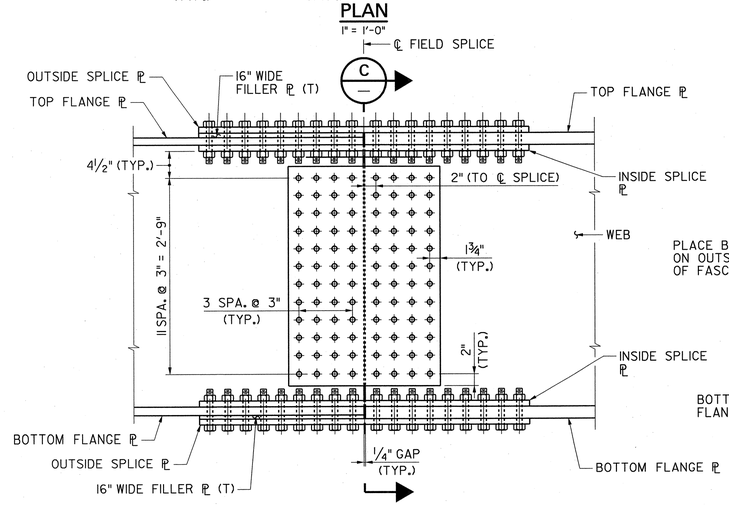

TYPICAL FIELD SPLICE DETAIL FOR GIRDERS G5, G6, G11 & G12
1" = 1'-0"

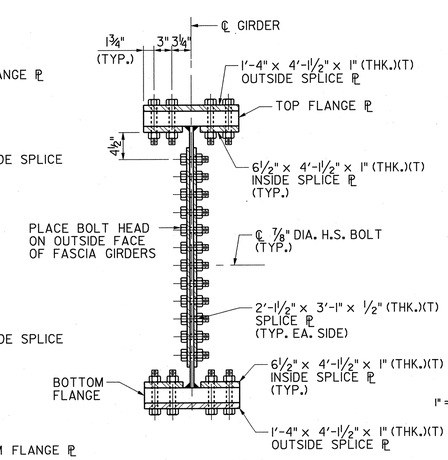

SECTION C
1"=1'-0"

1" = 1'-0"
1' 6" 0 1' 2'

NOTES:

1. THE FABRICATOR SHALL REFER TO "CAMBER TABLE" FOR VERTICAL AND HORIZONTAL CAMBERS AT EACH SPLICE LOCATION. THE GIRDERS SHALL BE SPLICED TOGETHER UNDER ZERO STRESS.
2. FOR LOCATIONS OF FIELD SPLICES, SEE SHS. B42 & B43.
3. ALL BOLTS (UNLESS OTHERWISE NOTED) SHALL BE ⅞" DIA. AND CONFORM TO ASTM A325. TYPE 3, WITH SUITABLE NUTS AND WASHERS, HAVING AN UNTHREADED SHANK OF SUFFICIENT LENGTH SO AS TO NOT ALLOW ANY THREADS TO EXIST IN THE PLANE BETWEEN ANY OF THE CONNECTED PARTS (SHEAR PLANE). CONNECTIONS SHALL BE FRICTION TYPE WITH BLAST CLEANED SURFACES WITH A CLASS "A" COATING.
4. ALL HOLES IN THE WEB AND FLANGE SPLICE PLATES SHALL BE 15/16" DIA.
5. ALL SPLICE PLATES (MARKED (T)) SHALL COMPLY WITH SUPPLEMENTARY REQUIREMENTS FOR NOTCH TOUGHNESS.

REVISION	BY	CKD.	DATE

NEW JERSEY DEPARTMENT OF TRANSPORTATION
BUREAU OF STRUCTURAL ENGINEERING

SPLICE DETAILS

ROUTE 22 LIBERTY AVENUE & CONRAIL BRIDGE
CONTRACT NO. 057009080

HILLSIDE TOWNSHIP — MUNICIPALITY
UNION — COUNTY

PB AMERICAS, INC.
CERTIFICATION OF AUTHORIZATION NO. 24GA28029800
BRUCE J. KARALIUS
NEW JERSEY PROFESSIONAL ENGINEER LICENSE NO. 26369

SCALE: AS SHOWN

BRIDGE SHEET NO. B45 of B128

152

CONTROL SECTION		JOB NO.	
DES. BY	L. LAU	CHK. BY	B. KARALIUS
DWN. BY	F. SKROBOT		
EST. BY	C. MANJUNATH	CHK. BY	M. CHEN
SPECS. BY	B. KARALIUS		
IN CHARGE OF	B. KARALIUS		

PARSONS BRINCKERHOFF CADD DATA
OPERATOR: marcuama
PLOT DATE: 04-DEC-2009 14:24
PENTABLE: strfull.tbl
DESIGN FILE: T:\00404\struc\Bridge\bp01e.dgn

STATE	FEDERAL PROJECT NO.	SHEET	TOTAL SHEETS
N.J.	FS-BR-0040 (168)		

STRUCTURE NO. 2004-164

ROUTE 22 OVER CONRAIL AND LIBERTY AVENUE
(FORMERLY STR. NO. 2004-153)

EASTBOUND CAMBER TABLE

GIRDER NUMBER		℄ BRGS. W. ABUT.	WEST SPAN (IN)										℄ BRGS. W. PIER	CENTER SPAN (IN)											℄ BRGS. E. PIER	EAST SPAN (IN)										℄ BRGS. E. ABUT.
	POINT NO.	0	1	2	3	4	5	6	7	FS	8	9	10	11	12	FS	13	14	15	16	17	FS	18	19	20	21	22	FS	23	24	25	26	27	28	29	30
G1	STR. STEEL	0.00	0.18	0.33	0.43	0.47	0.45	0.37	0.26	0.22	0.14	0.05	0.00	0.04	0.15	0.21	0.26	0.36	0.40	0.36	0.26	0.20	0.13	0.03	0.00	0.06	0.17	0.25	0.29	0.42	0.49	0.51	0.47	0.36	0.19	0.00
	S-I-P FORMS	0.00	0.05	0.09	0.12	0.13	0.12	0.10	0.07	0.06	0.04	0.01	0.00	0.01	0.03	0.04	0.06	0.08	0.09	0.08	0.06	0.04	0.03	0.00	0.00	0.02	0.05	0.07	0.08	0.11	0.13	0.14	0.13	0.10	0.05	0.00
	CONC. SLAB	0.00	0.60	1.11	1.44	1.58	1.51	1.26	0.89	0.76	0.51	0.17	0.00	0.08	0.36	0.53	0.70	0.99	1.09	0.97	0.68	0.51	0.33	0.05	0.00	0.20	0.57	0.84	1.00	1.39	1.65	1.72	1.56	1.19	0.64	0.00
	S.D.L.	0.00	0.14	0.26	0.35	0.38	0.36	0.31	0.22	0.18	0.12	0.04	0.00	0.03	0.11	0.15	0.20	0.27	0.29	0.26	0.19	0.14	0.09	0.02	0.00	0.05	0.14	0.20	0.24	0.33	0.39	0.40	0.36	0.28	0.15	0.00
	TOT. DL CAMBER	0.00	0.97	1.79	2.33	2.55	2.44	2.05	1.44	1.23	0.81	0.28	0.00	0.16	0.64	0.93	1.22	1.71	1.87	1.67	1.18	0.89	0.58	0.11	0.00	0.32	0.93	1.36	1.61	2.25	2.67	2.77	2.51	1.92	1.04	0.00
	V.C. ORDINATE	0.00	0.86	1.52	2.00	2.28	2.38	2.28	2.00	1.85	1.52	0.86	0.00	1.27	2.26	2.65	2.97	3.39	3.53	3.39	2.97	2.66	2.26	1.27	0.00	0.86	1.52	1.85	2.00	2.28	2.38	2.28	2.00	1.52	0.86	0.00
	TOTAL CAMBER	0.00	1.82	3.31	4.33	4.83	4.82	4.33	3.44	3.08	2.33	1.13	0.00	1.43	2.90	3.58	4.18	5.10	5.40	5.06	4.14	3.55	2.84	1.38	0.00	1.18	2.45	3.21	3.60	4.53	5.04	5.05	4.51	3.44	1.89	0.00
	POINT NO.	0	1	2	3	4	5	6	7	FS	8	9	10	11	12	FS	13	14	15	16	17	FS	18	19	20	21	22	FS	23	24	25	26	27	28	29	30
G2	STR. STEEL	0.00	0.15	0.28	0.37	0.40	0.38	0.32	0.22	0.20	0.12	0.04	0.00	0.04	0.13	0.20	0.23	0.31	0.34	0.31	0.23	0.19	0.13	0.03	0.00	0.04	0.12	0.15	0.22	0.31	0.38	0.40	0.36	0.28	0.15	0.00
	S-I-P FORMS	0.00	0.04	0.08	0.10	0.11	0.11	0.09	0.06	0.06	0.04	0.01	0.00	0.01	0.03	0.04	0.05	0.07	0.08	0.07	0.05	0.04	0.03	0.01	0.00	0.01	0.03	0.04	0.06	0.09	0.10	0.11	0.10	0.08	0.04	0.00
	CONC. SLAB	0.00	0.53	0.96	1.26	1.38	1.32	1.11	0.78	0.69	0.45	0.15	0.00	0.07	0.32	0.55	0.63	0.87	0.97	0.88	0.63	0.51	0.34	0.07	0.00	0.15	0.43	0.53	0.76	1.07	1.28	1.34	1.23	0.94	0.51	0.00
	S.D.L.	0.00	0.12	0.23	0.30	0.33	0.31	0.26	0.19	0.16	0.11	0.04	0.00	0.02	0.09	0.15	0.17	0.23	0.25	0.23	0.17	0.14	0.10	0.02	0.00	0.03	0.10	0.12	0.18	0.25	0.30	0.31	0.28	0.22	0.12	0.00
	TOT. DL CAMBER	0.00	0.85	1.55	2.03	2.22	2.12	1.78	1.26	1.11	0.71	0.24	0.00	0.14	0.56	0.94	1.08	1.48	1.64	1.49	1.09	0.88	0.60	0.13	0.00	0.24	0.68	0.84	1.23	1.72	2.06	2.16	1.97	1.52	0.83	0.00
	V.C. ORDINATE	0.00	0.77	1.37	1.79	2.05	2.14	2.05	1.79	1.70	1.37	0.77	0.00	1.13	2.01	2.49	2.64	3.02	3.14	3.02	2.64	2.41	2.01	1.13	0.00	0.77	1.37	1.76	1.79	2.05	2.14	2.05	1.79	1.37	0.77	0.00
	TOTAL CAMBER	0.00	1.62	2.91	3.82	4.27	4.26	3.83	3.05	2.80	2.08	1.01	0.00	1.27	2.57	3.42	3.72	4.50	4.78	4.51	3.72	3.29	2.61	1.26	0.00	1.00	2.04	2.60	3.02	3.77	4.20	4.21	3.77	2.89	1.60	0.00
	POINT NO.	0	1	2	3	4	5	6	7	FS	8	9	10	11	12	FS	13	14	15	16	17	FS	18	19	20	21	22	23	FS	24	25	26	27	28	29	30
G3	STR. STEEL	0.00	0.13	0.24	0.31	0.34	0.32	0.27	0.19	0.18	0.11	0.03	0.00	0.03	0.11	0.19	0.20	0.26	0.29	0.27	0.20	0.11	0.11	0.03	0.00	0.03	0.10	0.18	0.25	0.25	0.30	0.32	0.29	0.22	0.12	0.00
	S-I-P FORMS	0.00	0.04	0.07	0.09	0.10	0.09	0.08	0.06	0.05	0.03	0.01	0.00	0.01	0.02	0.05	0.05	0.06	0.07	0.06	0.05	0.03	0.03	0.01	0.00	0.01	0.03	0.05	0.07	0.07	0.09	0.09	0.08	0.06	0.03	0.00
	CONC. SLAB	0.00	0.46	0.84	1.10	1.21	1.16	0.98	0.70	0.64	0.40	0.14	0.00	0.07	0.29	0.56	0.57	0.78	0.86	0.79	0.59	0.32	0.31	0.08	0.00	0.12	0.36	0.63	0.87	0.89	1.06	1.11	1.01	0.78	0.42	0.00
	S.D.L.	0.00	0.11	0.19	0.25	0.28	0.27	0.23	0.16	0.15	0.09	0.03	0.00	0.02	0.08	0.14	0.15	0.20	0.22	0.20	0.15	0.09	0.08	0.03	0.00	0.03	0.08	0.14	0.20	0.20	0.24	0.25	0.23	0.18	0.10	0.00
	TOT. DL CAMBER	0.00	0.73	1.34	1.75	1.93	1.85	1.55	1.11	1.02	0.63	0.21	0.00	0.12	0.50	0.94	0.95	1.30	1.44	1.33	0.99	0.55	0.53	0.15	0.00	0.19	0.57	1.00	1.38	1.42	1.69	1.77	1.61	1.24	0.67	0.00
	V.C. ORDINATE	0.00	0.69	1.22	1.60	1.83	1.91	1.83	1.60	1.54	1.22	0.69	0.00	1.00	1.77	2.31	2.33	2.66	2.77	2.66	2.33	1.80	1.77	1.00	0.00	0.69	1.22	1.60	1.82	1.83	1.91	1.83	1.60	1.22	0.69	0.00
	TOTAL CAMBER	0.00	1.42	2.56	3.36	3.76	3.75	3.38	2.71	2.56	1.85	0.90	0.00	1.12	2.28	3.25	3.28	3.96	4.21	3.99	3.32	2.35	2.30	1.14	0.00	0.87	1.79	2.61	3.20	3.25	3.60	3.60	3.22	2.46	1.36	0.00
	POINT NO.	0	1	2	3	4	5	6	7	FS	8	9	10	11	12	13	FS	14	15	16	17	FS	18	19	20	21	22	FS	23	24	25	26	27	28	29	30
G4	STR. STEEL	0.00	0.11	0.20	0.26	0.28	0.27	0.22	0.16	0.15	0.09	0.03	0.00	0.03	0.09	0.16	0.17	0.21	0.24	0.22	0.16	0.16	0.09	0.03	0.00	0.02	0.08	0.13	0.14	0.20	0.25	0.26	0.24	0.18	0.10	0.00
	S-I-P FORMS	0.00	0.03	0.06	0.08	0.08	0.08	0.07	0.05	0.05	0.03	0.01	0.00	0.00	0.02	0.04	0.04	0.05	0.06	0.05	0.04	0.04	0.02	0.01	0.00	0.01	0.02	0.04	0.04	0.06	0.07	0.08	0.07	0.05	0.03	0.00
	CONC. SLAB	0.00	0.39	0.72	0.94	1.03	0.99	0.84	0.60	0.57	0.34	0.12	0.00	0.06	0.24	0.47	0.51	0.65	0.73	0.68	0.50	0.49	0.27	0.07	0.00	0.10	0.29	0.48	0.53	0.74	0.89	0.93	0.85	0.65	0.36	0.00
	S.D.L.	0.00	0.09	0.16	0.21	0.23	0.22	0.19	0.14	0.13	0.08	0.03	0.00	0.02	0.06	0.12	0.13	0.16	0.18	0.17	0.12	0.12	0.07	0.02	0.00	0.02	0.07	0.11	0.12	0.17	0.20	0.21	0.19	0.15	0.08	0.00
	TOT. DL CAMBER	0.00	0.62	1.13	1.48	1.63	1.57	1.32	0.94	0.90	0.54	0.18	0.00	0.10	0.41	0.79	0.85	1.08	1.21	1.11	0.83	0.81	0.46	0.13	0.00	0.15	0.46	0.76	0.83	1.17	1.41	1.47	1.35	1.03	0.56	0.00
	V.C. ORDINATE	0.00	0.61	1.08	1.42	1.63	1.69	1.63	1.42	1.39	1.08	0.61	0.00	0.87	1.55	2.04	2.12	2.33	2.43	2.33	2.04	2.02	1.55	0.87	0.00	0.61	1.08	1.32	1.48	1.63	1.69	1.63	1.42	1.08	0.61	0.00
	TOTAL CAMBER	0.00	1.23	2.22	2.90	3.26	3.26	2.94	2.36	2.30	1.62	0.79	0.00	0.98	1.96	2.82	2.98	3.41	3.64	3.44	2.87	2.83	2.01	1.00	0.00	0.76	1.54	2.08	2.31	2.79	3.10	3.10	2.77	2.12	1.17	0.00
	POINT NO.	0	1	2	3	4	5	6	FS	7	8	9	10	11	12	13	FS	14	15	16	17	FS	18	19	20	21	22	FS	23	24	25	26	27	28	29	30
G5	STR. STEEL	0.00	0.09	0.16	0.21	0.23	0.22	0.18	0.13	0.13	0.07	0.02	0.00	0.02	0.06	0.12	0.14	0.16	0.18	0.17	0.13	0.10	0.07	0.02	0.00	0.02	0.06	0.09	0.11	0.16	0.20	0.21	0.19	0.15	0.08	0.00
	S-I-P FORMS	0.00	0.03	0.05	0.06	0.07	0.07	0.06	0.04	0.04	0.02	0.01	0.00	0.00	0.01	0.03	0.04	0.04	0.05	0.04	0.03	0.02	0.02	0.01	0.00	0.01	0.02	0.03	0.04	0.05	0.06	0.06	0.06	0.04	0.02	0.00
	CONC. SLAB	0.00	0.32	0.59	0.77	0.85	0.81	0.68	0.49	0.49	0.28	0.10	0.00	0.04	0.18	0.36	0.43	0.51	0.57	0.53	0.40	0.31	0.21	0.06	0.00	0.08	0.24	0.34	0.44	0.62	0.74	0.77	0.71	0.55	0.30	0.00
	S.D.L.	0.00	0.07	0.13	0.17	0.19	0.18	0.16	0.11	0.11	0.06	0.02	0.00	0.01	0.05	0.09	0.11	0.13	0.14	0.13	0.10	0.08	0.05	0.02	0.00	0.02	0.06	0.08	0.10	0.14	0.16	0.17	0.16	0.12	0.07	0.00
	TOT. DL CAMBER	0.00	0.51	0.93	1.21	1.33	1.27	1.07	0.77	0.77	0.44	0.15	0.00	0.07	0.30	0.60	0.72	0.84	0.94	0.87	0.65	0.51	0.36	0.11	0.00	0.12	0.38	0.53	0.68	0.97	1.16	1.22	1.11	0.86	0.47	0.00
	V.C. ORDINATE	0.00	0.54	0.95	1.25	1.43	1.49	1.43	1.26	1.25	0.95	0.54	0.00	0.76	1.35	1.77	1.92	2.02	2.10	2.02	1.77	1.63	1.35	0.76	0.00	0.54	0.95	1.07	1.25	1.43	1.49	1.43	1.25	0.95	0.54	0.00
	TOTAL CAMBER	0.00	1.04	1.88	2.46	2.76	2.77	2.50	2.03	2.02	1.39	0.69	0.00	0.83	1.65	2.37	2.64	2.86	3.04	2.89	2.42	2.14	1.70	0.87	0.00	0.66	1.34	1.60	1.94	2.40	2.65	2.65	2.37	1.81	1.00	0.00
	POINT NO.	0	1	2	3	4	5	6	FS	7	8	9	10	11	12	13	FS	14	15	16	17	FS	18	19	20	21	22	FS	23	24	25	26	27	28	29	30
G6	STR. STEEL	0.00	0.06	0.12	0.16	0.17	0.16	0.14	0.10	0.10	0.06	0.02	0.00	0.01	0.04	0.08	0.10	0.11	0.12	0.11	0.08	0.06	0.04	0.01	0.00	0.02	0.06	0.08	0.10	0.14	0.17	0.18	0.16	0.13	0.07	0.00
	S-I-P FORMS	0.00	0.02	0.04	0.05	0.05	0.05	0.04	0.03	0.03	0.02	0.01	0.00	0.00	0.01	0.02	0.02	0.03	0.03	0.03	0.02	0.02	0.01	0.00	0.00	0.01	0.02	0.03	0.03	0.04	0.05	0.06	0.05	0.04	0.02	0.00
	CONC. SLAB	0.00	0.24	0.45	0.58	0.64	0.61	0.52	0.39	0.37	0.22	0.08	0.00	0.02	0.12	0.25	0.30	0.35	0.39	0.35	0.25	0.19	0.12	0.03	0.00	0.08	0.22	0.31	0.39	0.55	0.66	0.68	0.62	0.48	0.26	0.00
	S.D.L.	0.00	0.06	0.11	0.14	0.16	0.15	0.12	0.09	0.09	0.05	0.02	0.00	0.01	0.04	0.07	0.08	0.10	0.11	0.10	0.08	0.06	0.04	0.01	0.00	0.02	0.05	0.07	0.08	0.12	0.14	0.15	0.14	0.11	0.06	0.00
	TOT. DL CAMBER	0.00	0.38	0.71	0.93	1.02	0.98	0.82	0.62	0.59	0.34	0.12	0.00	0.04	0.22	0.42	0.50	0.58	0.65	0.59	0.43	0.32	0.22	0.05	0.00	0.12	0.35	0.48	0.61	0.85	1.02	1.07	0.98	0.75	0.41	0.00
	V.C. ORDINATE	0.00	0.47	0.83	1.09	1.25	1.30	1.25	1.12	1.09	0.83	0.47	0.00	0.65	1.15	1.52	1.72	1.73	1.80	1.73	1.52	1.17	1.15	0.65	0.00	0.47	0.83	1.04	1.09	1.25	1.30	1.25	1.09	0.83	0.47	0.00
	TOTAL CAMBER	0.00	0.85	1.54	2.02	2.27	2.28	2.07	1.73	1.68	1.17	0.59	0.00	0.69	1.37	1.93	2.22	2.32	2.45	2.32	1.94	1.49	1.37	0.70	0.00	0.59	1.18	1.52	1.71	2.10	2.32	2.32	2.07	1.58	0.88	0.00

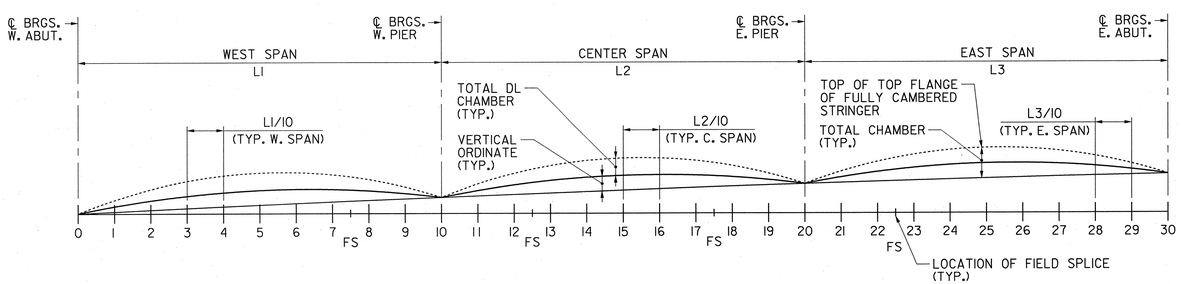

CAMBER DIAGRAM

N.T.S.

CAMBER AND DEFLECTION NOTES:

1. THE TOTAL CAMBER AS TABULATED IS ASSUMED TO BE MEASURED VERTICALLY TO THE TOP OF FULLY CAMBERED GIRDER FROM A STRAIGHT LINE DRAWN FROM THE INTERSECTION OF TOP OF GIRDER AND CENTERLINE OF BEARINGS AT ONE SUPPORT OF THE GIRDER TO THE INTERSECTION OF TOP OF GIRDER AND CENTERLINE OF BEARINGS AT THE NEXT SUPPORT OF THE GIRDER.
2. THE CAMBER LABELED "STRUCTURAL STEEL" IN THE TABLE IS THE DEFLECTION DUE TO THE DEAD LOAD WEIGHT OF STEEL AND DIAPHRAGMS IN THE GIRDER.
3. THE CAMBER LABELED "CONC. SLAB IN THE TABLE IS THE DEFLECTION DUE TO THE DEAD LOAD WEIGHT OF THE CONCRETE SLAB AND HAUNCHES.
4. THE CAMBER LABELED "S-I-P FORMS" IN THE TABLE IS THE DEFLECTION DUE TO THE WEIGHT OF CONCRETE IN THE STAY-IN-PLACE FORMS.
5. THE CAMBER LABELED "S.D.L." IN THE TABLE IS THE DEFLECTION DUE TO THE DEAD LOAD WEIGHT OF THE BARRIER CURB, PARAPET, SIDEWALK AND FUTURE WEARING SURFACE.
6. THE CAMBER LABELED "V.C. ORDINATE" IN THE TABLE IS THE CAMBER REQUIRED IN THE GIRDER TO CAUSE THE GIRDER TO FOLLOW THE VERTICAL CURVE.
7. CAMBERS LISTED IN THE TABLE AS POSITIVE ARE UPWARD CAMBERS.
8. THE TOTAL DEAD LOAD CAMBER IS THE CAMBER REQUIRED TO OFFSET THE SUM OF THE DEAD LOAD DEFLECTIONS GIVEN IN THE TABLE.
9. ALL CAMBERS AND DEAD LOAD DEFLECTIONS ARE IN DECIMALS OF AN INCH IN ENGLISH UNITS.
10. THE TOTAL DEAD LOAD CAMBER AND TOTAL CAMBER REQUIRED ARE SHOWN ASSUMING THAT STAY-IN-PLACE FORMS ARE USED. IF STAY-IN-PLACE FORMS ARE NOT SELECTED BY THE CONTRACTOR, THE CONTRACTOR SHALL ADJUST THE GIRDER CAMBERS ACCORDINGLY.

PARSONS BRINCKERHOFF CADD DATA
OPERATOR marquemo
PLOT DATE 01-DEC-2009 14:24
PENTABLE strfull.tbl
DESIGN FILE T:\00404\struct\Bridge1\p01_f.dgn

CONTROL SECTION		JOB NO.	
DES. BY	L. LAU	CHK. BY	B. KARALIUS
DWN. BY	F. SKROBOT		
EST. BY	C. MANJUNATH	CHK. BY	M. CHEN
SPECS. BY	B. KARALIUS		
IN CHARGE OF	B. KARALIUS		

REVISION	BY	CKD.	DATE

NEW JERSEY DEPARTMENT OF TRANSPORTATION
BUREAU OF STRUCTURAL ENGINEERING

EASTBOUND CAMBER TABLE

ROUTE 22 LIBERTY AVENUE & CONRAIL BRIDGE
CONTRACT NO. 057009080

HILLSIDE TOWNSHIP MUNICIPALITY — UNION COUNTY

PB AMERICAS, INC.
CERTIFICATION OF AUTHORIZATION NO. 24GA28029800
BRUCE J. KARALIUS
NEW JERSEY PROFESSIONAL ENGINEER LICENSE NO. 26369

SCALE: AS SHOWN

BRIDGE SHEET NO. B46 of B128

153

STATE	FEDERAL PROJECT NO.	SHEET	TOTAL SHEETS
N.J.	FS-BR-0040 (168)		

STRUCTURE NO. 2004-164

ROUTE 22 OVER CONRAIL AND LIBERTY AVENUE
(FORMERLY STR. NO. 2004-153)

WESTBOUND CAMBER TABLE

GIRDER NUMBER		℄ BRGS. W. ABUT.	WEST SPAN (IN)										℄ BRGS. C. PIER	EAST SPAN (IN)										℄ BRGS. E. ABUT.
	POINT NO.	0	1	2	3	4	5	6	FS	7	8	9	10	11	12	FS	13	14	15	16	17	18	19	20
G7	STR. STEEL	0.00	0.27	0.49	0.64	0.69	0.65	0.53	0.46	0.37	0.19	0.06	0.00	0.06	0.20	0.38	0.39	0.56	0.68	0.72	0.66	0.50	0.28	0.00
	S-I-P FORMS	0.00	0.06	0.11	0.15	0.16	0.15	0.12	0.10	0.08	0.04	0.01	0.00	0.02	0.05	0.10	0.10	0.14	0.17	0.18	0.17	0.13	0.07	0.00
	CONC. SLAB	0.00	0.77	1.41	1.83	1.96	1.82	1.46	1.25	0.98	0.49	0.12	0.00	0.21	0.65	1.21	1.23	1.76	2.12	2.24	2.05	1.58	0.87	0.00
	S.D.L.	0.00	0.20	0.37	0.48	0.52	0.49	0.40	0.34	0.27	0.14	0.12	0.00	0.06	0.17	0.32	0.33	0.46	0.55	0.58	0.53	0.40	0.22	0.00
	TOT. DL CAMBER	0.00	1.30	2.38	3.10	3.33	3.10	2.50	2.15	1.70	0.86	0.31	0.00	0.34	1.07	2.01	2.04	2.92	3.53	3.71	3.40	2.61	1.44	0.00
	V.C. ORDINATE	0.00	1.07	1.90	2.50	2.85	2.97	2.85	2.70	2.50	1.90	1.07	0.00	1.07	1.90	2.48	2.50	2.85	2.97	2.85	2.50	1.90	1.07	0.00
	TOTAL CAMBER	0.00	2.37	4.28	5.59	6.19	6.07	5.36	4.85	4.20	2.76	1.38	0.00	1.41	2.98	4.49	4.54	5.78	6.50	6.57	5.90	4.51	2.51	0.00
	POINT NO.	0	1	2	3	4	5	6	FS	7	8	9	10	11	12	13	FS	14	15	16	17	18	19	20
G8	STR. STEEL	0.00	0.21	0.38	0.49	0.54	0.51	0.41	0.36	0.29	0.16	0.05	0.00	0.04	0.15	0.29	0.37	0.42	0.51	0.54	0.50	0.39	0.21	0.00
	S-I-P FORMS	0.00	0.05	0.09	0.12	0.13	0.12	0.10	0.08	0.07	0.03	0.01	0.00	0.01	0.04	0.08	0.10	0.11	0.13	0.14	0.13	0.10	0.06	0.00
	CONC. SLAB	0.00	0.63	1.14	1.48	1.59	1.48	1.19	1.02	0.81	0.43	0.13	0.00	0.15	0.50	0.93	1.20	1.34	1.63	1.73	1.60	1.24	0.68	0.00
	S.D.L.	0.00	0.16	0.29	0.37	0.40	0.38	0.31	0.26	0.21	0.11	0.04	0.00	0.04	0.13	0.24	0.30	0.34	0.41	0.43	0.40	0.31	0.17	0.00
	TOT. DL CAMBER	0.00	1.04	1.90	2.46	2.65	2.48	2.01	1.73	1.37	0.74	0.23	0.00	0.24	0.82	1.53	1.97	2.21	2.68	2.84	2.63	2.03	1.12	0.00
	V.C. ORDINATE	0.00	0.90	1.60	2.10	2.40	2.50	2.40	2.34	2.25	1.60	0.90	0.00	0.92	1.64	2.37	2.43	2.45	2.56	2.45	2.15	1.64	0.92	0.00
	TOTAL CAMBER	0.00	1.94	3.50	4.56	5.06	4.98	4.41	4.06	3.62	2.34	1.13	0.00	1.16	2.46	3.90	4.40	4.66	5.24	5.30	4.77	3.67	2.04	0.00
	POINT NO.	0	1	2	3	4	5	6	FS	7	8	9	10	11	12	FS	13	14	15	16	17	18	19	20
G9	STR. STEEL	0.00	0.15	0.28	0.36	0.39	0.37	0.30	0.26	0.21	0.11	0.03	0.00	0.03	0.11	0.16	0.21	0.31	0.38	0.41	0.38	0.29	0.16	0.00
	S-I-P FORMS	0.00	0.04	0.07	0.09	0.10	0.09	0.08	0.06	0.05	0.03	0.01	0.00	0.01	0.03	0.04	0.06	0.08	0.10	0.11	0.10	0.08	0.04	0.00
	CONC. SLAB	0.00	0.48	0.88	1.14	1.23	1.15	0.92	0.79	0.63	0.33	0.09	0.00	0.11	0.37	0.54	0.71	1.03	1.27	1.34	1.24	0.97	0.53	0.00
	S.D.L.	0.00	0.11	0.21	0.27	0.29	0.28	0.22	0.19	0.15	0.08	0.02	0.00	0.03	0.09	0.14	0.18	0.25	0.31	0.33	0.30	0.23	0.13	0.00
	TOT. DL CAMBER	0.00	0.79	1.44	1.87	2.01	1.88	1.52	1.31	1.04	0.55	0.16	0.00	0.18	0.61	0.88	1.15	1.68	2.06	2.18	2.02	1.57	0.86	0.00
	V.C. ORDINATE	0.00	0.75	1.33	1.74	1.99	2.07	1.99	1.91	1.82	1.33	0.75	0.00	0.78	1.39	1.63	1.83	2.09	2.17	2.09	1.83	1.39	0.78	0.00
	TOTAL CAMBER	0.00	1.53	2.76	3.61	4.00	3.95	3.51	3.22	2.86	1.88	0.90	0.00	0.97	2.00	2.51	2.98	3.76	4.23	4.27	3.85	2.96	1.64	0.00
	POINT NO.	0	1	2	3	4	5	6	FS	7	8	9	10	11	12	13	FS	14	15	16	17	18	19	20
G10	STR. STEEL	0.00	0.10	0.19	0.25	0.27	0.25	0.20	0.17	0.14	0.07	0.02	0.00	0.03	0.08	0.16	0.18	0.23	0.28	0.30	0.28	0.22	0.12	0.00
	S-I-P FORMS	0.00	0.03	0.05	0.07	0.07	0.07	0.05	0.05	0.04	0.02	0.01	0.00	0.01	0.02	0.04	0.05	0.06	0.08	0.08	0.08	0.06	0.03	0.00
	CONC. SLAB	0.00	0.36	0.64	0.83	0.89	0.83	0.67	0.57	0.45	0.23	0.06	0.00	0.09	0.28	0.54	0.61	0.79	0.97	1.04	0.96	0.74	0.41	0.00
	S.D.L.	0.00	0.08	0.15	0.19	0.20	0.19	0.15	0.18	0.20	0.05	0.02	0.00	0.02	0.07	0.13	0.15	0.19	0.23	0.24	0.22	0.17	0.09	0.00
	TOT. DL CAMBER	0.00	0.57	1.03	1.33	1.43	1.34	1.08	0.97	0.83	0.38	0.11	0.00	0.15	0.46	0.88	0.99	1.28	1.56	1.66	1.54	1.19	0.65	0.00
	V.C. ORDINATE	0.00	0.61	1.08	1.41	1.62	1.68	1.62	1.53	1.43	1.08	0.61	0.00	0.65	1.16	1.60	1.64	1.75	1.82	1.75	1.53	1.16	0.65	0.00
	TOTAL CAMBER	0.00	1.17	2.11	2.74	3.05	3.02	2.69	2.50	2.25	1.46	0.71	0.00	0.80	1.63	2.48	2.63	3.02	3.38	3.41	3.07	2.36	1.31	0.00
	POINT NO.	0	1	2	3	4	5	6	FS	7	8	9	10	11	12	FS	13	14	15	16	17	18	19	20
G11	STR. STEEL	0.00	0.06	0.11	0.15	0.16	0.15	0.12	0.09	0.08	0.04	0.01	0.00	0.02	0.07	0.10	0.12	0.18	0.21	0.22	0.20	0.16	0.09	0.00
	S-I-P FORMS	0.00	0.02	0.03	0.04	0.05	0.05	0.04	0.03	0.02	0.01	0.00	0.00	0.01	0.02	0.03	0.04	0.05	0.06	0.07	0.06	0.05	0.03	0.00
	CONC. SLAB	0.00	0.23	0.43	0.55	0.59	0.55	0.45	0.32	0.30	0.16	0.04	0.00	0.08	0.25	0.36	0.44	0.63	0.76	0.80	0.74	0.57	0.31	0.00
	S.D.L.	0.00	0.05	0.10	0.12	0.13	0.13	0.10	0.07	0.07	0.04	0.01	0.00	0.02	0.06	0.08	0.10	0.15	0.18	0.18	0.17	0.13	0.07	0.00
	TOT. DL CAMBER	0.00	0.37	0.67	0.87	0.94	0.88	0.71	0.51	0.47	0.25	0.06	0.00	0.13	0.39	0.57	0.70	1.01	1.21	1.27	1.17	0.90	0.49	0.00
	V.C. ORDINATE	0.00	0.48	0.85	1.12	1.28	1.33	1.28	1.17	1.15	0.85	0.48	0.00	0.54	0.96	1.15	1.26	1.44	1.50	1.44	1.26	0.96	0.54	0.00
	TOTAL CAMBER	0.00	0.85	1.52	1.99	2.22	2.21	1.99	1.68	1.63	1.10	0.54	0.00	0.67	1.35	1.72	1.96	2.44	2.71	2.71	2.43	1.86	1.03	0.00
	POINT NO.	0	1	2	3	4	5	6	7	FS	8	9	10	11	12	13	FS	14	15	16	17	18	19	20
G12	STR. STEEL	0.00	0.03	0.05	0.07	0.07	0.06	0.05	0.03	0.02	0.01	0.00	0.00	0.02	0.06	0.10	0.12	0.14	0.17	0.17	0.16	0.12	0.06	0.00
	S-I-P FORMS	0.00	0.01	0.02	0.02	0.03	0.02	0.02	0.01	0.01	0.00	0.00	0.00	0.01	0.02	0.03	0.04	0.04	0.05	0.05	0.05	0.04	0.02	0.00
	CONC. SLAB	0.00	0.13	0.23	0.30	0.32	0.29	0.22	0.14	0.12	0.05	0.00	0.00	0.08	0.22	0.38	0.46	0.52	0.63	0.66	0.60	0.46	0.25	0.00
	S.D.L.	0.00	0.03	0.06	0.07	0.08	0.07	0.06	0.04	0.03	0.02	0.00	0.00	0.02	0.05	0.08	0.10	0.11	0.14	0.14	0.13	0.10	0.05	0.00
	TOT. DL CAMBER	0.00	0.20	0.36	0.46	0.49	0.44	0.34	0.21	0.19	0.08	0.00	0.00	0.13	0.35	0.60	0.72	0.82	0.98	1.02	0.93	0.71	0.39	0.00
	V.C. ORDINATE	0.00	0.37	0.66	0.86	0.98	1.03	0.98	0.86	0.83	0.66	0.37	0.00	0.43	0.77	1.01	1.10	1.16	1.21	1.16	1.01	0.77	0.43	0.00
	TOTAL CAMBER	0.00	0.57	1.01	1.32	1.47	1.47	1.33	1.07	1.02	0.74	0.37	0.00	0.56	1.12	1.61	1.82	1.98	2.19	2.18	1.94	1.48	0.82	0.00

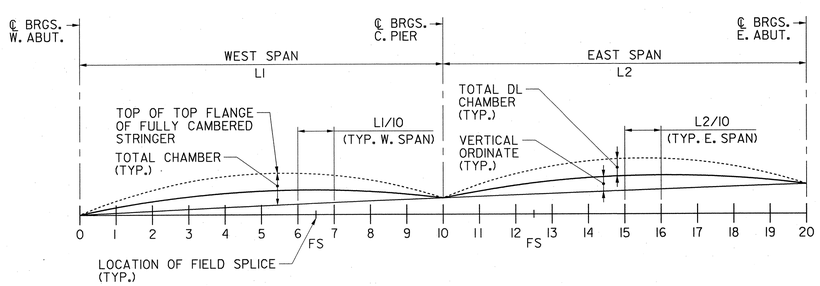

CAMBER DIAGRAM

N.T.S.

NOTES:

1. FOR RELATED NOTES, SEE SH. B46.

CONTROL SECTION		JOB NO.	
DES. BY	L. LAU	CHK. BY	B. KARALIUS
DWN. BY	F. SKROBOT		
EST. BY	C. MANJUNATH	CHK. BY	M. CHEN
SPECS. BY	B. KARALIUS		
IN CHARGE OF	B. KARALIUS		

REVISION	BY	CKD.	DATE

NEW JERSEY DEPARTMENT OF TRANSPORTATION
BUREAU OF STRUCTURAL ENGINEERING

WESTBOUND CAMBER TABLE

ROUTE 22 LIBERTY AVENUE & CONRAIL BRIDGE
CONTRACT NO. 057009080

HILLSIDE TOWNSHIP MUNICIPALITY — UNION COUNTY

PB AMERICAS, INC.
CERTIFICATION OF AUTHORIZATION NO. 24GA28029800
BRUCE J. KARALIUS
NEW JERSEY PROFESSIONAL ENGINEER LICENSE NO. 26369

SCALE: AS SHOWN

BRIDGE SHEET NO. B47 of B128

154

PARSONS BRINCKERHOFF CADD DATA
OPERATOR marluema
PLOT DATE 01-DEC-2009 14:24
PENTABLE strfull.tbl
DESIGN FILE T:\00404\struct\Bridge\bg01_q.dgn

STATE	FEDERAL PROJECT NO.	SHEET	TOTAL SHEETS
N.J.	FS-BR-0040 (168)		

STRUCTURE NO. 2004-164

ROUTE 22 OVER CONRAIL AND LIBERTY AVENUE
(FORMERLY STR. NO. 2004-153)

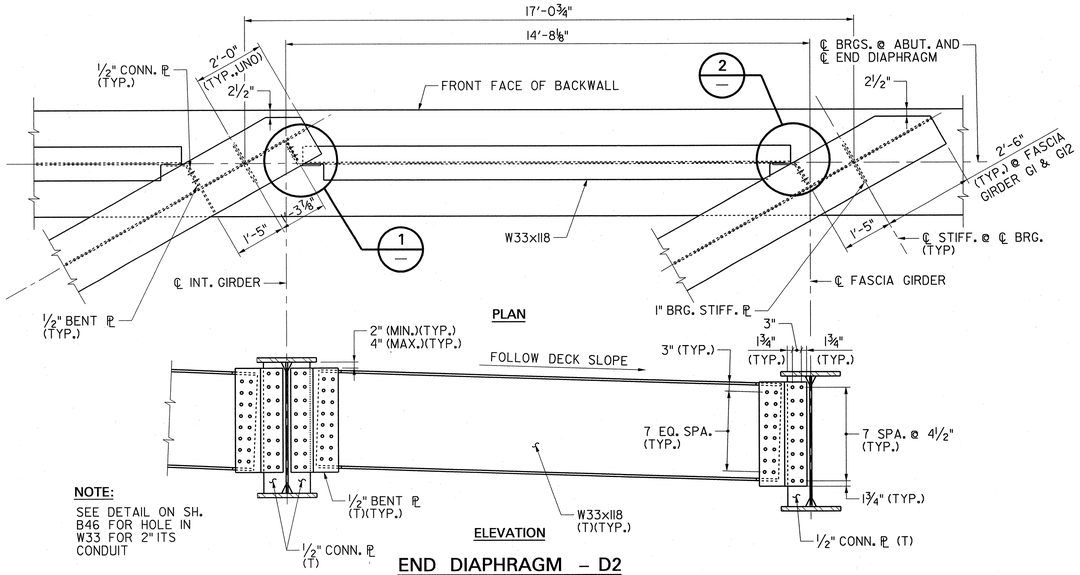

NOTE:
SEE DETAIL ON SH. B46 FOR HOLE IN W33 FOR 2" ITS CONDUIT

END DIAPHRAGM – D2

EAST ABUTMENT, EB FASCIA BAY SHOWN
(ALL OTHER BAYS SIMILAR)
½" = 1'-0"

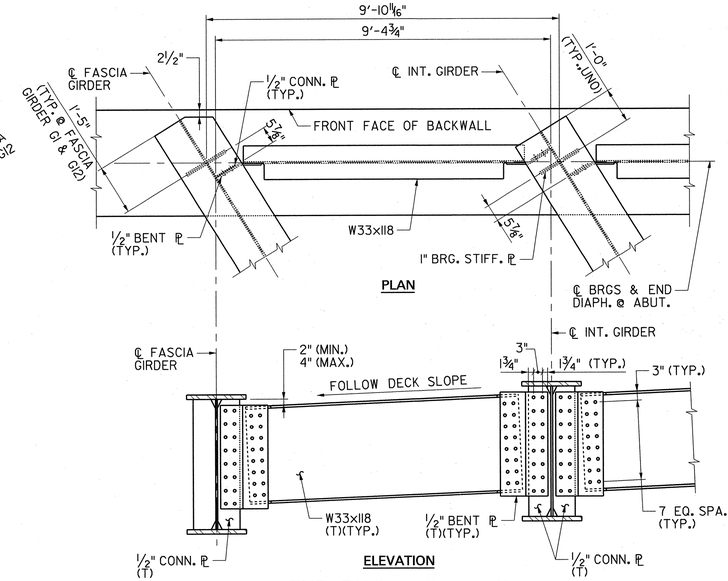

END DIAPHRAGM – D1

WEST ABUTMENT, EB FASCIA BAY SHOWN
(ALL OTHER BAYS SIMILAR)
½" = 1'-0"

NOTES:

1. TOP FLANGES OF GIRDERS ARE NOT SHOWN IN PLAN VIEWS, FOR CLARITY.
2. FOR CROSS FRAME AND DIAPHRAGM LOCATIONS, SEE FRAMING PLAN.
3. STRUCTURAL STEEL SHALL BE AASHTO M270 GRADE 50W (ASTM A709, GRADE 50W).
4. FOR PAINTING REQUIREMENTS, SEE NOTE 2 ON SH. B42
5. ALL BOLTS SHALL BE ⅞" DIA. (EXCEPT AS NOTED) AND SHALL CONFORM TO ASTM A325, TYPE 3.
6. ALL CONNECTION CONTACT SURFACES SHALL CONFORM TO THE REQUIREMENTS FOR AASHTO CLASS 'B' SLIP CRITICAL CONNECTIONS.
7. ALL HOLES IN CONNECTION PLATES SHALL BE 15/16" DIA. FOR ⅞" DIA. H.S. BOLTS WITH HARDENED WASHERS SHALL BE PROVIDED FOR OVERSIZED HOLES.
8. UNLESS OTHERWISE NOTED, FOR ⅞" H.S. BOLTS, MIN. SPACING IS 3" AND MIN. EDGE DISTANCE IS 1¾".
9. ALL CONNECTIONS SHALL BE FRICTION-TYPE CONNECTIONS WITH THREADS EXCLUDED FROM SHEAR PLANE.
10. ½" DIA. BOLTS SHALL CONFORM TO ASTM A325, TYPE 3. WASHERS SHALL BE PROVIDED FOR OVERSIZED HOLES.
11. ALL DIAPHRAGM MEMBERS, GUSSET PLATES, CONNECTION PLATES MARKED (T) SHALL COMPLY WITH SUPPLEMENTARY REQUIREMENTS FOR NOTCH TOUGHNESS.
12. ALL WELDS ARE SUBJECT TO NONDESTRUCTIVE TESTING UNDER THE QUALITY CONTROL WELDING INSPECTION.

LEGEND:

(T) SHALL COMPLY WITH SUPPLEMENTARY REQUIREMENTS FOR NOTCH TOUGHNESS.

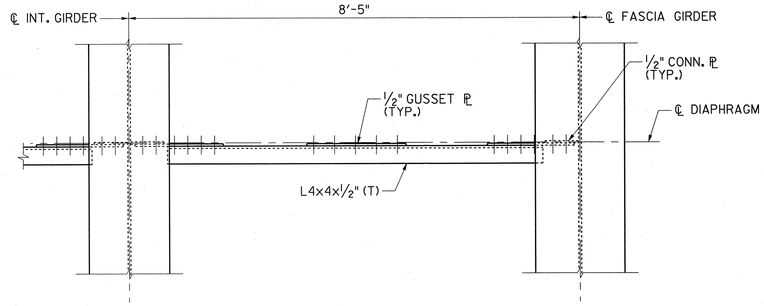

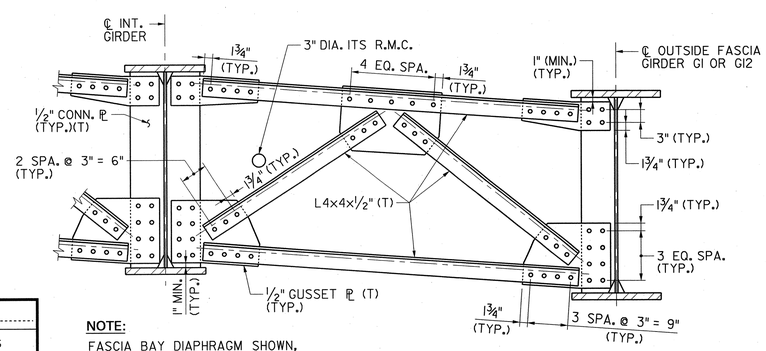

NOTE:
FASCIA BAY DIAPHRAGM SHOWN, INTERIOR DIAPHRAGM SIMILAR.

INTERMEDIATE DIAPHRAGM – D3

EB FASCIA GIRDER SHOWN (LOOKING EAST)
WB LOOKING WEST, (SIMILAR-UNO)
¾" = 1'-0"

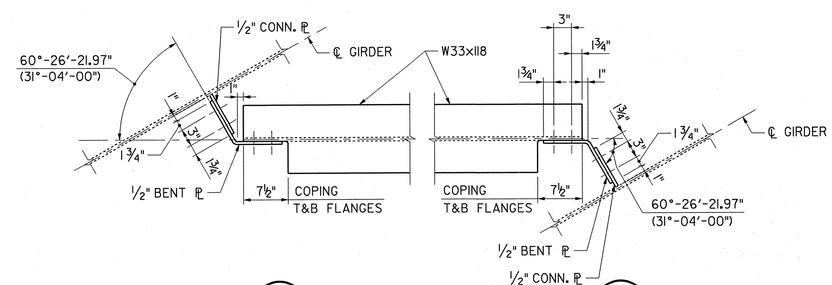

DETAIL 1
1" = 1'-0"

DETAIL 2
1" = 1'-0"

NOTE:
DETAILS AT EAST ABUTMENT SHOWN, AT WEST ABUTMENT SIMILAR UNO IN PARENTHESES.

1/2" = 1'-0"
1" = 1'-0"
3/4" = 1'-0"

REVISION	BY	CKD.	DATE

NEW JERSEY DEPARTMENT OF TRANSPORTATION
BUREAU OF STRUCTURAL ENGINEERING

DIAPHRAGM DETAILS – 1

ROUTE 22 LIBERTY AVENUE & CONRAIL BRIDGE
CONTRACT NO. 057009080

HILLSIDE TOWNSHIP — MUNICIPALITY
UNION — COUNTY

PB AMERICAS, INC.
CERTIFICATION OF AUTHORIZATION NO. 24GA28029800
BRUCE J. KARALIUS
NEW JERSEY PROFESSIONAL ENGINEER LICENSE NO. 26369

SCALE: AS SHOWN

BRIDGE SHEET NO. B48 of B128

155

CONTROL SECTION			JOB NO.
DES. BY	L. LAU	CHK. BY	B. KARALIUS
DWN. BY	F. SKROBOT		
EST. BY	C. MANJUNATH	CHK. BY	M. CHEN
SPECS. BY	B. KARALIUS		
IN CHARGE OF	B. KARALIUS		

PARSONS BRINCKERHOFF CADD DATA
OPERATOR mcarluma
PLOT DATE 04-DEC-2009 14:25
PENTABLE STYFULL.tbl
DESIGN FILE T:\00404\structure\Bridge_1\de01_a.dgn

STATE	FEDERAL PROJECT NO.	SHEET	TOTAL SHEETS
N.J.	FS-BR-0040 (168)		

STRUCTURE NO. 2004-164

ROUTE 22 OVER CONRAIL AND LIBERTY AVENUE
(FORMERLY STR. NO. 2004-153)

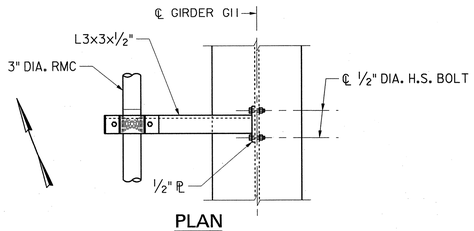

PLAN
1" = 1'-0"

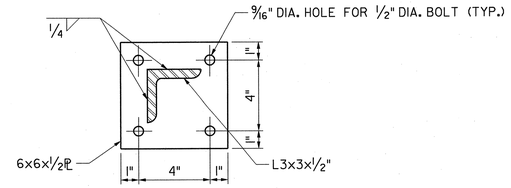

SECTION A
3" = 1'-0"

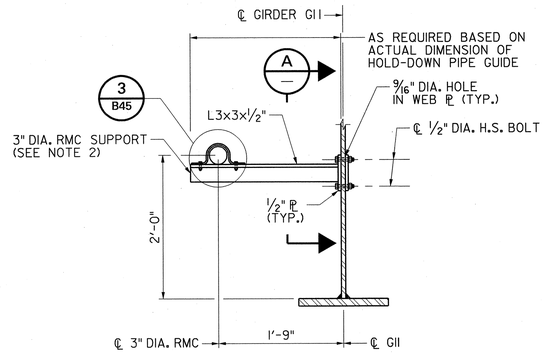

3" DIA. ITS R.M.C. SUPPORT
(LOOKING EAST)
1" = 1'-0"

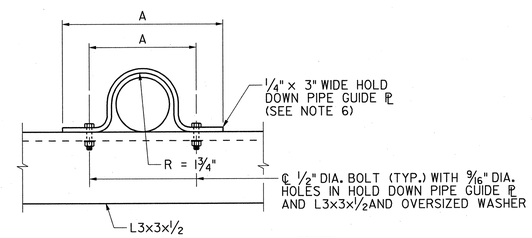

DETAIL 3
3" = 1'-0"

NOTE:
DIMENSION 'A' VARIES PER MANUFACTURER

NOTES:

1. FOR THE ADDITIONAL NOTES, SEE SH. B48.
2. FOR THE LOCATIONS OF ITS SUPPORTS, SEE FRAMING PLAN.
3. EXPANSION FITTINGS FOR 3" DIA. RMC SHALL BE PROVIDED AT THE ABUTMENTS.
4. COST OF 3" DIA. ITS RMC EXPANSION SLEEVES SHALL BE INCLUDED IN THE COST OF THE CONDUIT.
5. STRUCTURAL STEEL FOR ITS SUPPORT IS TO BE AASHTO M270 GRADE 50W (ASTM A709 GRADE 50W). BOLTS ARE TO BE ASTM A325, TYPE 3. PAINTING REQUIREMENTS STIPULATED IN NOTE 2 ON SH. B39 SHALL APPLY. THE COST IS TO BE INCLUDED IN THE COST OF THE STRUCTURAL STEEL.
6. HOLD DOWN PIPE GUIDE SHALL BE HOT DIP GALVANIZED CARBON STEEL. COST TO BE INCLUDED IN THE COST OF THE CONDUIT.

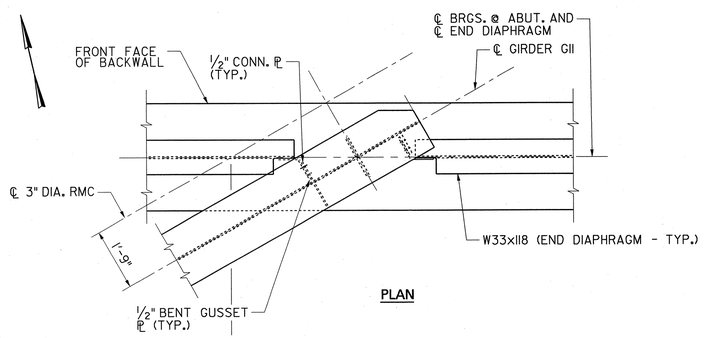

PLAN

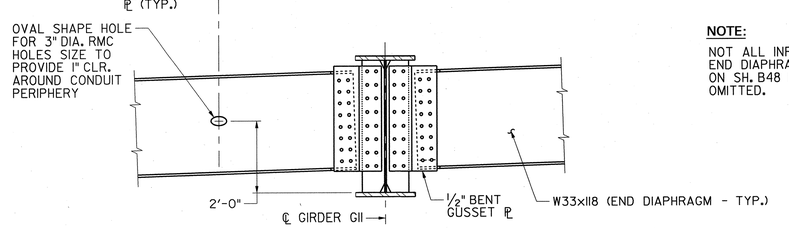

ELEVATION

OPENING IN END DIAPHRAGM AT EAST ABUTMENT FOR ITS CONDUIT
LOOKING EAST
1/2" = 1'-0"

NOTE:
NOT ALL INFORMATION IS SHOWN. SEE END DIAPHRAGM DETAILS D1 AND D2 ON SH. B48 FOR INFORMATION OMITTED.

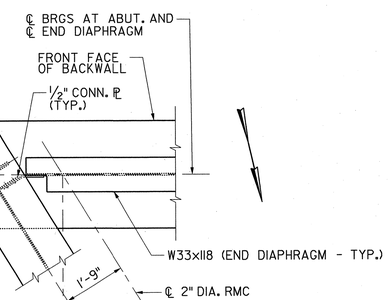

PLAN

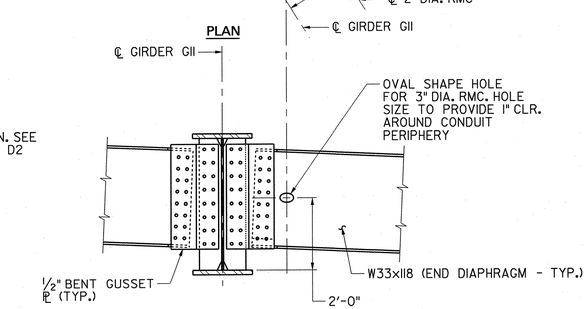

ELEVATION

OPENING IN END DIAPHRAGM AT WEST ABUTMENT FOR ITS CONDUIT
LOOKING WEST
1/2" = 1'-0"

1/2" = 1'-0" 1' 0 1' 2' 4'
1" = 1'-0" 1' 6" 0 1' 2'
3" = 1'-0" 0 3" 6" 9" 12"

REVISION	BY	CKD.	DATE

NEW JERSEY DEPARTMENT OF TRANSPORTATION
BUREAU OF STRUCTURAL ENGINEERING

DIAPHRAGM DETAILS – 2

ROUTE 22 LIBERTY AVENUE & CONRAIL BRIDGE
CONTRACT NO. 057009080

HILLSIDE TOWNSHIP
MUNICIPALITY

UNION
COUNTY

PB AMERICAS, INC.
CERTIFICATION OF AUTHORIZATION NO. 24GA28029800
BRUCE J. KARALIUS
NEW JERSEY PROFESSIONAL ENGINEER LICENSE NO. 26369

SCALE: AS SHOWN

BRIDGE SHEET NO. B49 of B128

156

CONTROL SECTION		JOB NO.	
DES. BY	L. LAU	CHK. BY	B. KARALIUS
DWN. BY	F. SKROBOT		
EST. BY	C. MANJUNATH	CHK. BY	M. CHEN
SPECS. BY	B. KARALIUS		
IN CHARGE OF	B. KARALIUS		

PARSONS BRINCKERHOFF CADD DATA
OPERATOR marluenc
PLOT DATE 01-DEC-2009 14:25
PENTABLE strfull.tbl
DESIGN FILE T:\00404\struct\Bridge\dc01b.dgn

STATE	FEDERAL PROJECT NO.	SHEET	TOTAL SHEETS
N.J.	FS-BR-0040 (168)		

STRUCTURE NO. 2004-164

ROUTE 22 OVER CONRAIL AND LIBERTY AVENUE
(FORMERLY STR. NO. 2004-153)

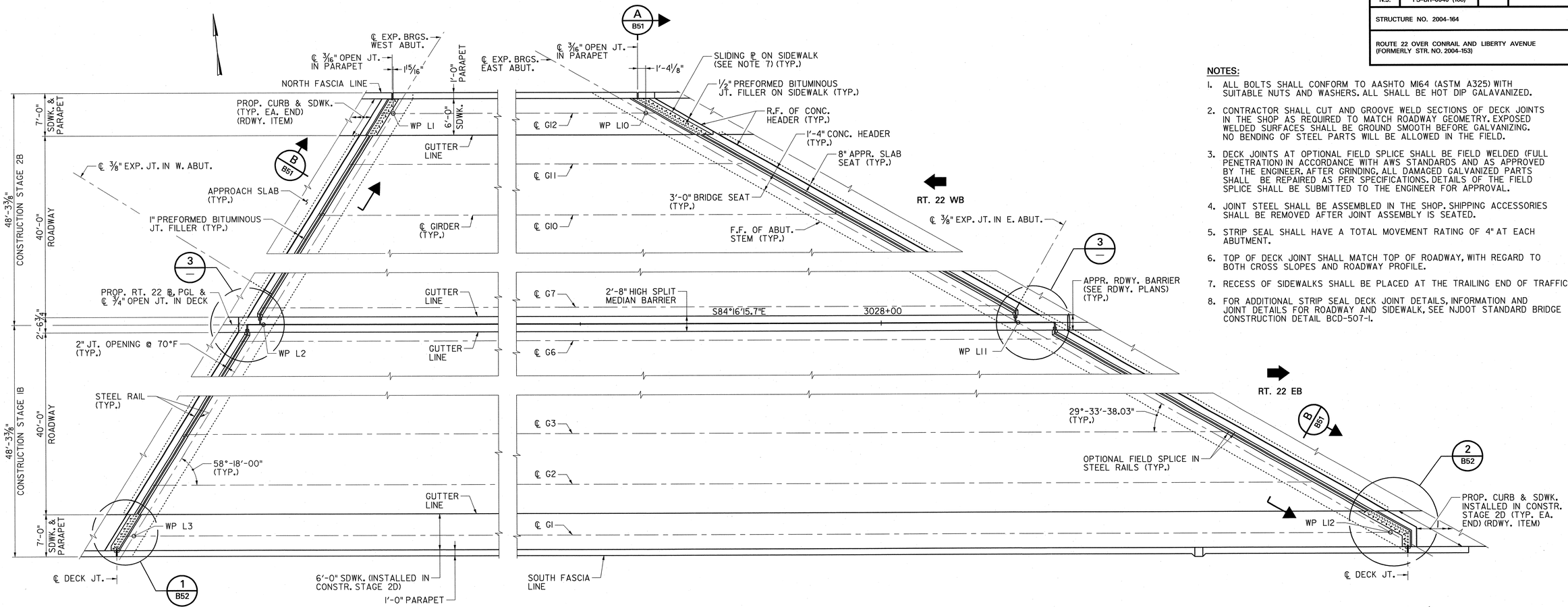

PLAN
1/8" = 1'-0"

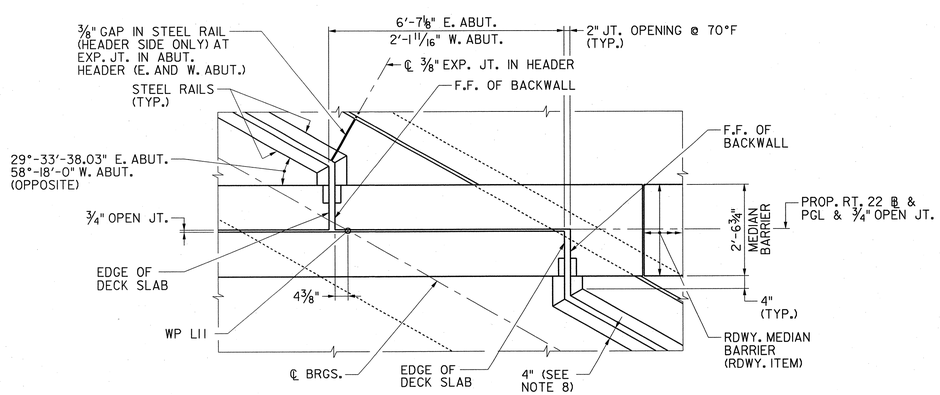

DETAIL 3 / —
1/2" = 1'-0"

AT E. ABUT. SHOWN
AT W. ABUT., OPPOSITE HAND SIMILAR

NOTES:

1. ALL BOLTS SHALL CONFORM TO AASHTO M164 (ASTM A325) WITH SUITABLE NUTS AND WASHERS. ALL SHALL BE HOT DIP GALAVANIZED.
2. CONTRACTOR SHALL CUT AND GROOVE WELD SECTIONS OF DECK JOINTS IN THE SHOP AS REQUIRED TO MATCH ROADWAY GEOMETRY. EXPOSED WELDED SURFACES SHALL BE GROUND SMOOTH BEFORE GALVANIZING. NO BENDING OF STEEL PARTS WILL BE ALLOWED IN THE FIELD.
3. DECK JOINTS AT OPTIONAL FIELD SPLICE SHALL BE FIELD WELDED (FULL PENETRATION) IN ACCORDANCE WITH AWS STANDARDS AND AS APPROVED BY THE ENGINEER. AFTER GRINDING, ALL DAMAGED GALVANIZED PARTS SHALL BE REPAIRED AS PER SPECIFICATIONS. DETAILS OF THE FIELD SPLICE SHALL BE SUBMITTED TO THE ENGINEER FOR APPROVAL.
4. JOINT STEEL SHALL BE ASSEMBLED IN THE SHOP. SHIPPING ACCESSORIES SHALL BE REMOVED AFTER JOINT ASSEMBLY IS SEATED.
5. STRIP SEAL SHALL HAVE A TOTAL MOVEMENT RATING OF 4" AT EACH ABUTMENT.
6. TOP OF DECK JOINT SHALL MATCH TOP OF ROADWAY, WITH REGARD TO BOTH CROSS SLOPES AND ROADWAY PROFILE.
7. RECESS OF SIDEWALKS SHALL BE PLACED AT THE TRAILING END OF TRAFFIC.
8. FOR ADDITIONAL STRIP SEAL DECK JOINT DETAILS, INFORMATION AND JOINT DETAILS FOR ROADWAY AND SIDEWALK, SEE NJDOT STANDARD BRIDGE CONSTRUCTION DETAIL BCD-507-1.

QUANTITIES

ITEM NO.	DESCRIPTION	UNIT	CONTRACT QUANTITIES STAGE 1B	CONTRACT QUANTITIES STAGE 2B
507015P	STRIP SEAL EXPANSION JOINT ASSEMBLY	LF	147	151

CONTROL SECTION		JOB NO.	
DES. BY	L. LAU	CHK. BY	B. KARALIUS
DWN. BY	M. P. MARUE		
EST. BY	C. MANJUNATH	CHK. BY	M. CHEN
SPECS. BY	B. KARALIUS		
IN CHARGE OF	B. KARALIUS		

1/8" = 1'-0" 1'0 2' 4' 8' 16'
1/2" = 1'-0" 1' 0 1' 2' 4'

REVISION	BY	CKD.	DATE

NEW JERSEY DEPARTMENT OF TRANSPORTATION
BUREAU OF STRUCTURAL ENGINEERING

DECK JOINT PLAN

ROUTE 22 LIBERTY AVENUE & CONRAIL BRIDGE
CONTRACT NO. 057009080

HILLSIDE TOWNSHIP — MUNICIPALITY
UNION — COUNTY

PB AMERICAS, INC.
CERTIFICATION OF AUTHORIZATION NO. 24GA28029800
BRUCE J. KARALIUS
NEW JERSEY PROFESSIONAL ENGINEER LICENSE NO. 26369

SCALE: AS SHOWN

BRIDGE SHEET NO. B50 of B128

157

PARSONS BRINCKERHOFF CADD DATA
OPERATOR marquemc
PLOT DATE 01-DEC-2009 14:25
PENTABLE strfull.tbl
DESIGN FILE T:\00404\struct\Bridge\kdl01_a.dgn

STATE	FEDERAL PROJECT NO.	SHEET	TOTAL SHEETS
N.J.	FS-BR-0040 (168)		

STRUCTURE NO. 2004-164

ROUTE 22 OVER CONRAIL AND LIBERTY AVENUE
(FORMERLY STR. NO. 2004-153)

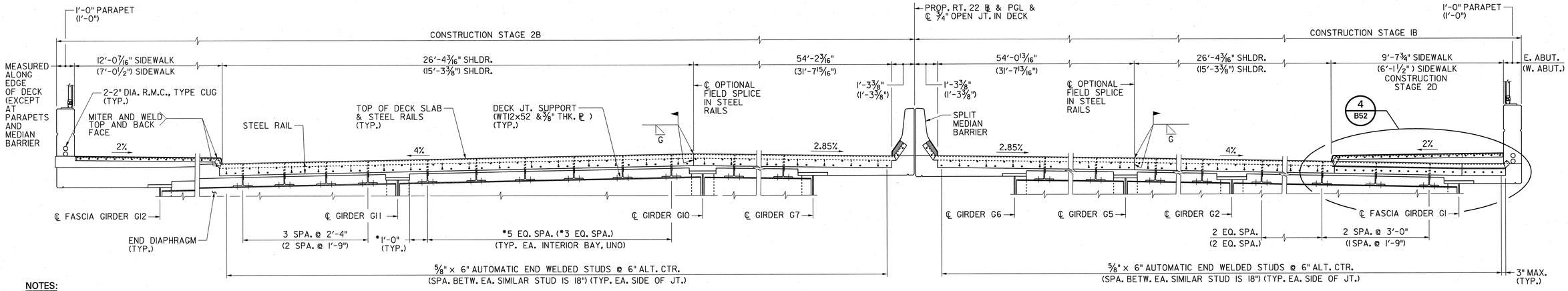

NOTES:

* TYP. EA. BAY

DIMENSIONS FOR WEST ABUTMENT IN PARENTHESES.

SPACING OF DECK JT. SUPPORTS PROVIDED ALONG ABUTMENTS.

THE CROSS SLOPES, SHOWN IN SECTION A, ARE THE TYPICAL CROSS SLOPES PERPENDICULAR TO ROUTE 22 BASE LINE.

SECTION A B50 — AT EAST ABUT. (SHOWN, LOOKING EAST)
AT WEST ABUT. (SIMILAR, LOOKING EAST)
⅜" = 1'-0"

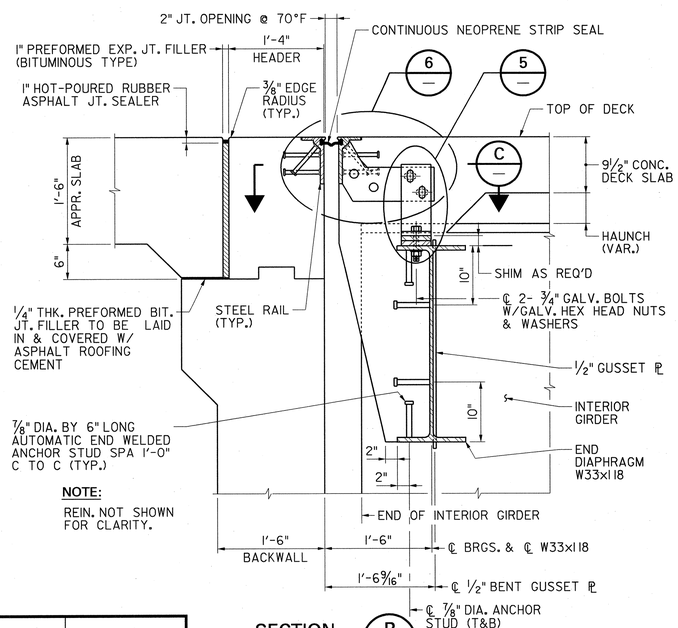

NOTE:

REIN. NOT SHOWN FOR CLARITY.

SECTION B B50
1" = 1'-0"

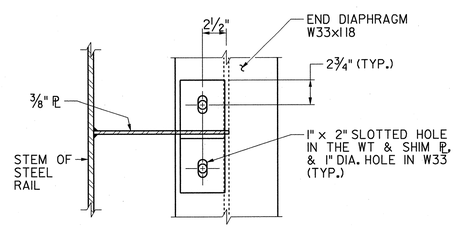

SECTION C —
1½" = 1'-0"

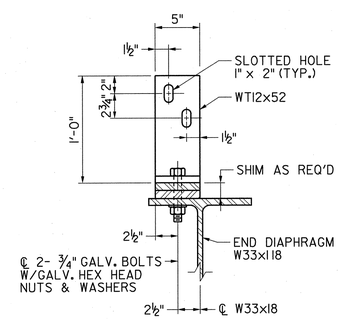

DETAIL 5 —
1½" = 1'-0"

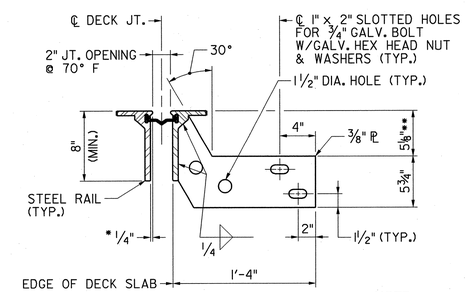

NOTE:

STUDS NOT SHOWN FOR CLARITY.

*THIS DIMENSION VARIES PER MANUFACTURER. THE CONTRACTOR SHALL MAKE ALL NECESSARY ADJUSTMENTS TO ALL ASSOCIATED BRIDGE COMPONENTS BASED ON ACTUAL DIMENSIONS.

**THIS NUMBER NEEDS TO BE VERIFIED BY THE CONTRACTOR BASED ON ACTUAL VERTICAL LOCATION OF END DIAPHRAGM.

DETAIL 6 —
1½" = 1'-0"

NOTES:

1. WORK THIS SHEET WITH SHS. B50 & B52.
2. FOR ADDITIONAL STRIP SEAL DECK JOINT DETAILS AND INFORMATION, SEE NJDOT STANDARD BRIDGE CONSTRUCTION DETAIL BCD-507-1.
3. FOR ADDITIONAL NOTES, SEE SHS. B50 & B52.

1 1/2" = 1'-0" 1' 6" 0 1'
1" = 1'-0" 1' 6" 0 1' 2'
3/8" = 1'-0" 1' 0 2' 4' 8'

REVISION	BY	CKD.	DATE

NEW JERSEY DEPARTMENT OF TRANSPORTATION
BUREAU OF STRUCTURAL ENGINEERING

DECK JOINT SECTIONS AND DETAILS – 1

ROUTE 22 LIBERTY AVENUE & CONRAIL BRIDGE
CONTRACT NO. 057009080

HILLSIDE TOWNSHIP — MUNICIPALITY
UNION — COUNTY

PB AMERICAS, INC.
CERTIFICATION OF AUTHORIZATION NO. 24GA28029800
BRUCE J. KARALIUS
NEW JERSEY PROFESSIONAL ENGINEER LICENSE NO. 26369

SCALE: AS SHOWN

BRIDGE SHEET NO. B51 of B128

158

CONTROL SECTION		JOB NO.	
DES. BY	L. LAU	CHK. BY	B. KARALIUS
DWN. BY	J. BOGNAR		
EST. BY	C. MANJUNATH	CHK. BY	M. CHEN
SPECS. BY	B. KARALIUS		
IN CHARGE OF	B. KARALIUS		

PARSONS BRINCKERHOFF CADD DATA
OPERATOR: mcruema
PLOT DATE: 01-DEC-2009 14:25
PENTABLE: str-full.tbl
DESIGN FILE: T:\00404\struc\Bridge_1\d101_b.dgn

STATE	FEDERAL PROJECT NO.	SHEET	TOTAL SHEETS
N.J.	FS-BR-0040 (168)		

STRUCTURE NO. 2004-164

ROUTE 22 OVER CONRAIL AND LIBERTY AVENUE
(FORMERLY STR. NO. 2004-153)

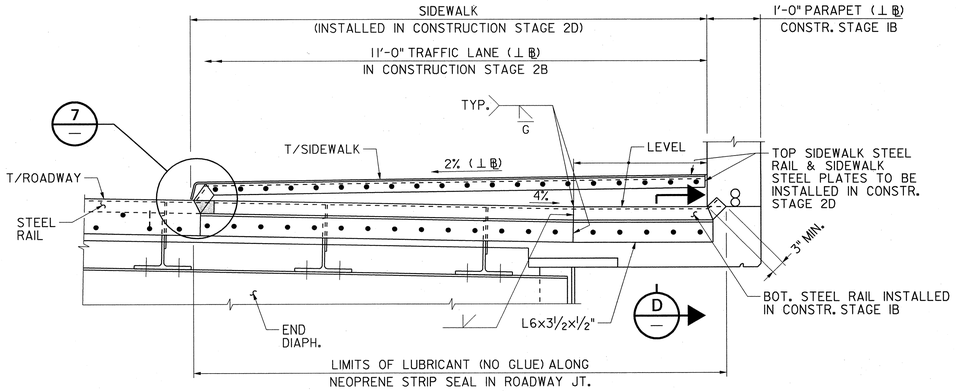

DETAIL 4 / B51 — AT EAST ABUT. SHOWN
N.T.S. — AT WEST ABUT. SIMILAR

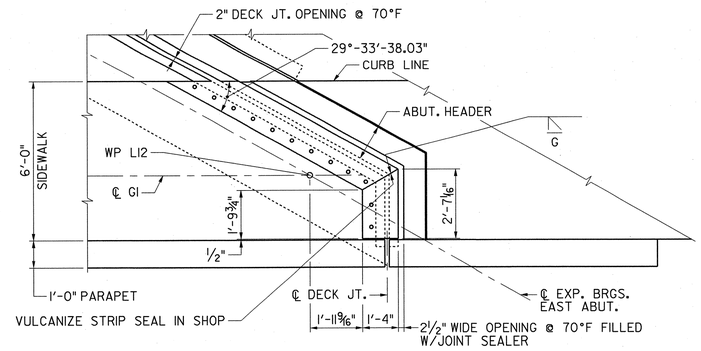

DETAIL 2 / B50
⅜" = 1'-0"

NOTES:

1. WORK THIS SHEET WITH SHS. B50 & B51.
2. THIS DIMENSION VARIES PER MANUFACTURER. THE CONTRACTOR SHALL MAKE ALL NECESSARY ADJUSTMENTS TO ALL ASSOCIATED BRIDGE COMPONENTS BASED ON ACTUAL DIMENSIONS.
2. SEPARATE PAYMENT WILL NOT BE MADE FOR INSTALLING THE DECK JOINT IN TWO STAGES AT THE SOUTH SIDEWALK. THE COST IS TO BE INCLUDED IN THE COST OF THE STRIP SEAL JOINT ASSEMBLY.

CONSTRUCTION PROCEDURE:

CONSTRUCTION STAGE 1B

1. PRE-CUT THE SHADED SECTION AND TACK WELD BOTH ENDS OF THE SECTION DURING CONSTRUCTION STAGE 1B. THIS SECTION WILL BE REMOVED IN STAGE 2D.
2. GROOVE WELD THE BOTTOM STEEL RAIL, EXCEPT THE SHADED SECTION, TO L6x3½x½".

CONSTRUCTION STAGE 2D

1. PRIOR TO INSTALLING THE TOP SIDEWALK STEEL RAIL, CAREFULLY REMOVE THE STRIP SEAL FROM THE RAIL CHANNELS TO THE POINT WHERE LUBRICANT WAS APPLIED.
2. REMOVE THE SHADED SECTION AND FIELD GROOVE WELD THE TOP SIDEWALK STEEL RAIL TO THE DECK JOINT STEEL RAIL AS SHOWN TO MAKE A CONTINUOUS CHANNEL FOR THE STRIP SEAL.

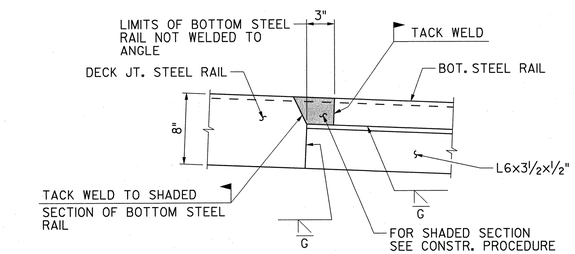

CONSTRUCTION STAGE 1B

DETAIL 7 / —
1½" = 1'-0"

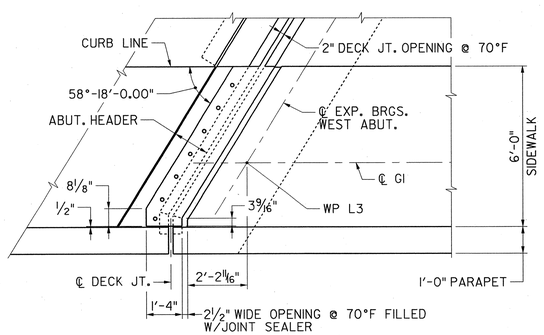

DETAIL 1 / B50
⅜" = 1'-0"

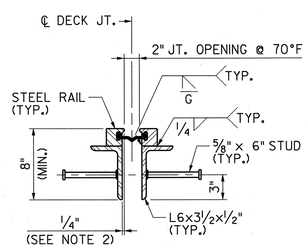

SECTION D / —
1½" = 1'-0"

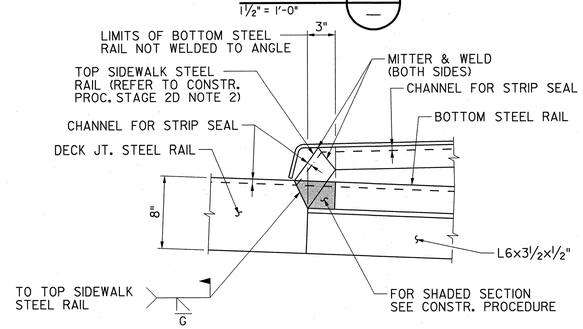

CONSTRUCTION STAGE 2D

DETAIL 7 / —
1½" = 1'-0"

1 1/2" = 1'-0" — 1' 6" 0 1'
3/8" = 1'-0" — 1' 0 2' 4' 8'
3/4" = 1'-0" — 1' 0 1' 2' 4'

REVISION	BY	CKD.	DATE

NEW JERSEY DEPARTMENT OF TRANSPORTATION
BUREAU OF STRUCTURAL ENGINEERING

DECK JOINT SECTIONS AND DETAILS – 2

ROUTE 22 LIBERTY AVENUE & CONRAIL BRIDGE
CONTRACT NO. 057009080

HILLSIDE TOWNSHIP — MUNICIPALITY
UNION — COUNTY

PB AMERICAS, INC.
CERTIFICATION OF AUTHORIZATION NO. 24GA28029800
BRUCE J. KARALIUS
NEW JERSEY PROFESSIONAL ENGINEER LICENSE NO. 26369

SCALE: AS SHOWN

BRIDGE SHEET NO. B52 of B128

159

CONTROL SECTION		JOB NO.	
DES. BY	L. LAU	CHK. BY	B. KARALIUS
DWN. BY	J. BOGNAR		
EST. BY	C. MANJUNATH	CHK. BY	M. CHEN
SPECS. BY	B. KARALIUS		
IN CHARGE OF	B. KARALIUS		

PARSONS BRINCKERHOFF CADD DATA
OPERATOR mariuema
PLOT DATE 01-DEC-2009 14:25
PENTABLE strfull.tbl
DESIGN FILE T:\N0404\struct\Bridge\d101_e.dgn

STATE	FEDERAL PROJECT NO.	SHEET	TOTAL SHEETS
N.J.	FS-BR-0040 (168)		

STRUCTURE NO. 2004-164

ROUTE 22 OVER CONRAIL AND LIBERTY AVENUE
(FORMERLY STR. NO. 2004-153)

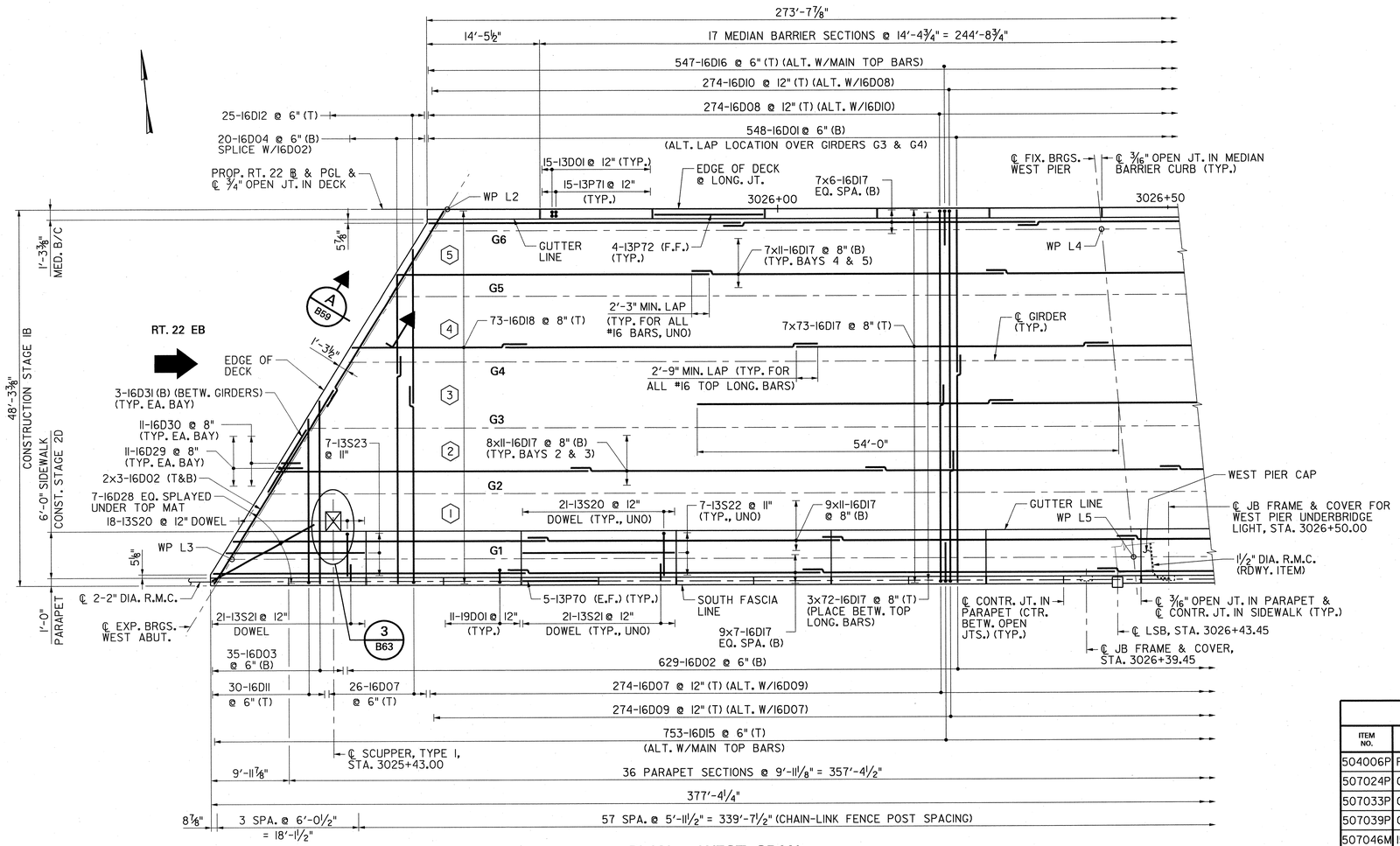

PLAN – WEST SPAN

1/8" = 1'-0"

NOTES:

1. WORK THIS SHEET WITH SHS. B54 AND B55.
2. DIAPHRAGMS ARE NOT SHOWN FOR CLARITY.
3. FOR WORKING POINT DATA, SEE SH. B7.
4. DECK SLAB SHALL BE MACHINE FINISHED AND SAWCUT GROOVED. FOR DECK SLAB SAWCUT GROOVING DETAILS, SEE NJDOT STANDARD BRIDGE CONSTRUCTION DETAILS SHEET BCD-507-3, SAWCUT GROOVING FOR SKEWED BRIDGE DECK. THE DECK SLAB, IN THE AREA DIRECTLY UNDER WHERE THE SIDEWALK IN STAGE 2D IS TO BE PLACED, SHALL NOT BE SAWCUT.
5. FOR TOP OF DECK ELEVATIONS, SEE SH. B62.
6. REINFORCEMENT SPACING SHALL BE ADJUSTED AS REQUIRED TO AVOID THE SHEAR CONNECTORS, DECK JOINTS STUDS AND WT SECTIONS ATTACHED TO THE TOP OF END DIAPHRAGMS.
7. IF STAY-IN-PLACE FORMS ARE USED THE SPACING (PITCH) OF THE RIBS (FLUTES) SHALL MATCH THE SPACING OF THE BOTTOM MAIN REINFORCEMENT STEEL.
8. PAYMENT FOR 2'-8" PARAPETS IS TO BE MADE UNDER THE PAY ITEM. "CONCRETE IN SUPERSTRUCTURE, PARAPET HPC." PAYMENT FOR 1'-3" MEDIAN BARRIER CURB IS TO BE MADE UNDER PAY ITEM, "15"x32" CONCRETE BARRIER CURB, BRIDGE, HPC," PAYMENT FOR SIDEWALK IS TO BE MADE UNDER PAY ITEM "CONCRETE IN SUPERSTRUCTURE, SIDEWALK, HPC".
9. THE CONTRACTOR IS TO BE AWARE THAT THE EDGE OF DECK SLAB DOES NOT OCCUR AT THE SAME LOCATION AS THE EDGE OF DECK JOINT RAIL, TO WHICH THE DECK OPENING IS MEASURED, SEE SH. B51.
10. FOR JUNCTION BOX DETAILS, SEE SH. B60.
11. FOR R.M.C. EXPANSION FITTING DETAILS, SEE SH. B60.
12. FOR CURVED TOP CHAIN-LINK FENCE DETAILS, SEE NJDOT STANDARD BRIDGE CONSTRUCTION DETAILS DRAWING BCD-509-1. THE CHAIN-LINK FENCE, INCLUDING FABRIC, POSTS, TENSIONERS, FASTENERS, SUPPORTS AND ANY MISCELLANEOUS HARDWARE SHALL BE BROWN VINYL CLAD.
13. LENGTHS OF DECK FOR END SPANS ARE BASED ON A DECK JOINT OPENING OF 2" AT 70°F.
14. NO STAY-IN-PLACE FORM IS PERMITTED IN THE FASCIA OVERHANG AREAS.
15. FOR LOCATIONS OF TRANSVERSE CONSTRUCTION JOINTS, SEE SH. B59.

QUANTITIES

ITEM NO.	DESCRIPTION	UNIT	CONTRACT QUANTITIES STAGE 1B	CONTRACT QUANTITIES STAGE 2B
504006P	REINFORCEMENT STEEL, EPOXY COATED	LB	165,500	111,200
507024P	CONCRETE BRIDGE DECK, HPC	CY	560	370
507033P	CONCRETE BRIDGE SIDEWALK, HPC	CY	33	17
507039P	CONCRETE BRIDGE PARAPET, HPC	LF	378	157
507046M	15" BY 32" CONCRETE BARRIER CURB, BRIDGE, HPC	LF	275	269
508006M	SCUPPER	UNIT	1	2
509084P	CHAIN-LINK FENCE PVC-COATED STEEL, BRIDGE, 6'-3" HIGH CURVED TOP	LF	378	157
701012P	1 1/2" RIGID METALLIC CONDUIT	LF	28	11
701015P	2" RIGID METALLIC CONDUIT	LF	770	327
701120M	JUNCTION BOX FRAME & COVER	UNIT	4	2

LEGEND:

(1) BAY NUMBER

G6 GIRDER DESIGNATION

CONTROL SECTION		JOB NO.	
DES. BY	L. LAU	CHK. BY	M. CHEN
DWN. BY	J. BOGNAR		
EST. BY	C. MANJUNATH	CHK. BY	M. CHEN
SPECS. BY	B. KARALIUS		
IN CHARGE OF	B. KARALIUS		

PARSONS BRINCKERHOFF CADD DATA
OPERATOR mcruema
PLOT DATE 01-DEC-2009 14:25
PENTABLE strfull.tbl
DESIGN FILE T:\1004004\structure\Bridge\1dp01c.dgn

1/8" = 1'-0"
1'0 2' 4' 8' 16'

REVISION	BY	CKD.	DATE

NEW JERSEY DEPARTMENT OF TRANSPORTATION
BUREAU OF STRUCTURAL ENGINEERING

EASTBOUND DECK SLAB PLAN – 1

ROUTE 22 LIBERTY AVENUE & CONRAIL BRIDGE
CONTRACT NO. 057009080

HILLSIDE TOWNSHIP
MUNICIPALITY

UNION
COUNTY

PB AMERICAS, INC.
CERTIFICATION OF AUTHORIZATION NO. 24GA28029800
BRUCE J. KARALIUS
NEW JERSEY PROFESSIONAL ENGINEER LICENSE NO. 26369

SCALE: AS SHOWN

BRIDGE SHEET NO. B53 of B128

160

STATE	FEDERAL PROJECT NO.	SHEET	TOTAL SHEETS
N.J.	FS-BR-0040 (168)		

STRUCTURE NO. 2004-164

ROUTE 22 OVER CONRAIL AND LIBERTY AVENUE
(FORMERLY STR. NO. 2004-153)

NOTE:

1. FOR NOTES, SEE SH. B53.

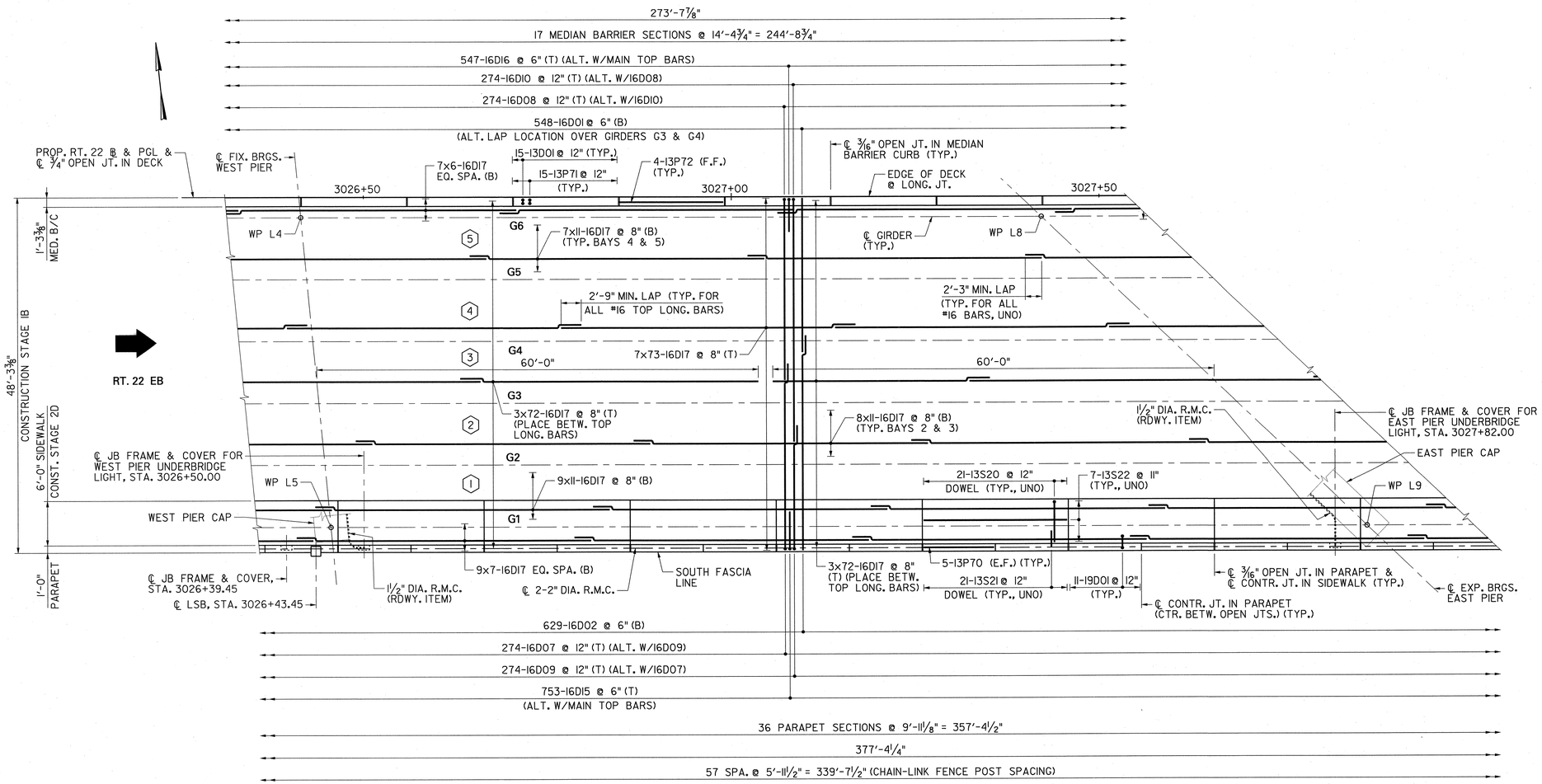

PLAN – CENTER SPAN

1/8" = 1'-0"

LEGEND:

(1) BAY NUMBER

G6 GIRDER DESIGNATION

CONTROL SECTION		JOB NO.	
DES. BY	L. LAU	CHK. BY	M. CHEN
DWN. BY	J. BOGNAR		
EST. BY	C. MANJUNATH	CHK. BY	M. CHEN
SPECS. BY	B. KARALIUS		
IN CHARGE OF	B. KARALIUS		

PARSONS BRINCKERHOFF CADD DATA
OPERATOR marcuema
PLOT DATE 01-DEC-2009 14:25
PENTABLE strfull.tbl
DESIGN FILE T:\00404\struc\Bridge_1\dp01_d.dgn

1/8" = 1'-0"

1'0 2' 4' 8' 16'

REVISION	BY	CKD.	DATE

NEW JERSEY DEPARTMENT OF TRANSPORTATION
BUREAU OF STRUCTURAL ENGINEERING

EASTBOUND DECK SLAB PLAN – 2

ROUTE 22 LIBERTY AVENUE & CONRAIL BRIDGE
CONTRACT NO. 057009080

HILLSIDE TOWNSHIP MUNICIPALITY — UNION COUNTY

PB AMERICAS, INC.
CERTIFICATION OF AUTHORIZATION NO. 24GA28029800
BRUCE J. KARALIUS
NEW JERSEY PROFESSIONAL ENGINEER LICENSE NO. 26369

SCALE: AS SHOWN

BRIDGE SHEET NO. B54 of B128

161

STATE	FEDERAL PROJECT NO.	SHEET	TOTAL SHEETS
N.J.	FS-BR-0040 (168)		

STRUCTURE NO. 2004-164

ROUTE 22 OVER CONRAIL AND LIBERTY AVENUE
(FORMERLY STR. NO. 2004-153)

NOTE:

1. FOR NOTES, SEE SH. B53.

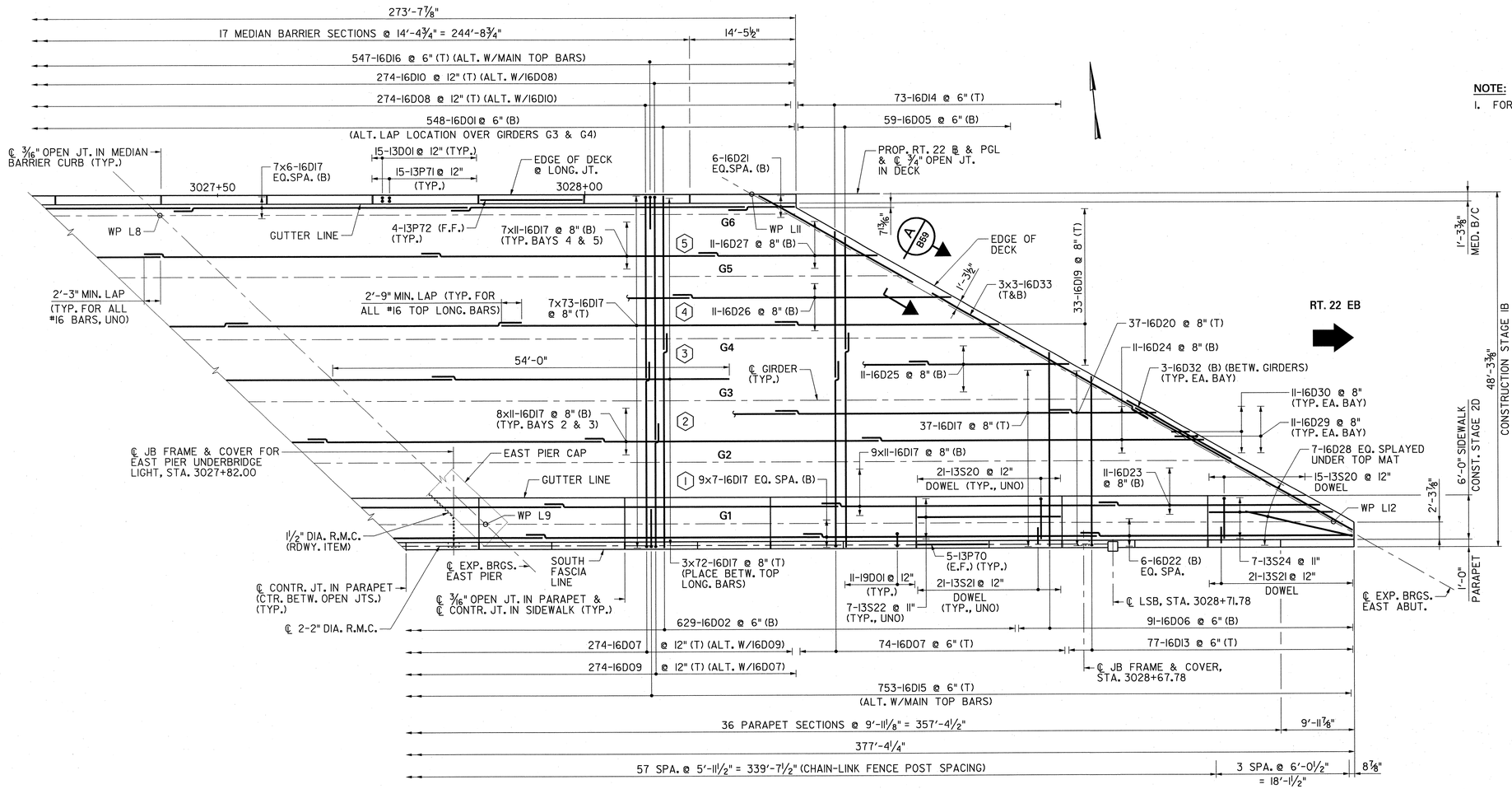

PLAN – EAST SPAN

1/8" = 1'-0"

LEGEND:

(1) BAY NUMBER

G6 GIRDER DESIGNATION

CONTROL SECTION		JOB NO.	
DES. BY	L. LAU	CHK. BY	M. CHEN
DWN. BY	J. BOGNAR		
EST. BY	C. MANJUNATH	CHK. BY	M. CHEN
SPECS. BY	B. KARALIUS		
IN CHARGE OF	B. KARALIUS		

PARSONS BRINCKERHOFF CADD DATA
OPERATOR mar-uama
PLOT DATE 04-DEC-2009 14:25
PENTABLE str-full.tbl
DESIGN FILE T:\00404\struc\Bridge_1\dp01.e.dgn

1/8" = 1'-0"

1'0 2' 4' 8' 16'

REVISION	BY	CKD.	DATE

NEW JERSEY DEPARTMENT OF TRANSPORTATION
BUREAU OF STRUCTURAL ENGINEERING

EASTBOUND DECK SLAB PLAN – 3

ROUTE 22 LIBERTY AVENUE & CONRAIL BRIDGE
CONTRACT NO. 057009080

HILLSIDE TOWNSHIP MUNICIPALITY — UNION COUNTY

PB AMERICAS, INC.
CERTIFICATION OF AUTHORIZATION NO. 24GA28029800
BRUCE J. KARALIUS
NEW JERSEY PROFESSIONAL ENGINEER LICENSE NO. 26369

SCALE: AS SHOWN

BRIDGE SHEET NO. B55 of B128

162

STATE	FEDERAL PROJECT NO.	SHEET	TOTAL SHEETS
N.J.	FS-BR-0040 (168)		

STRUCTURE NO. 2004-164

ROUTE 22 OVER CONRAIL AND LIBERTY AVENUE
(FORMERLY STR. NO. 2004-153)

NOTE:

1. FOR NOTES, SEE SH. B53.

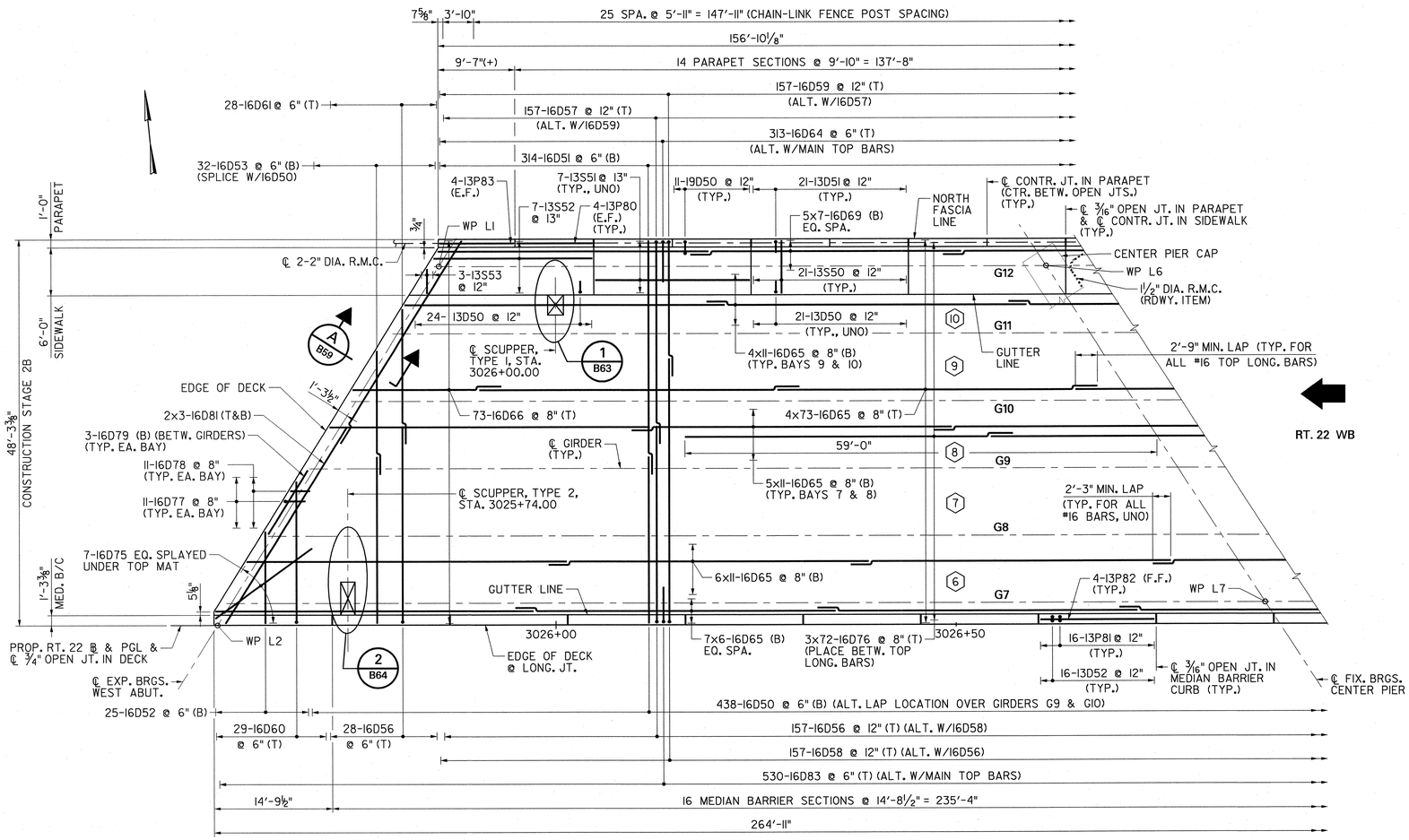

PLAN – WEST SPAN

1/8" = 1'-0"

LEGEND:

(10) BAY NUMBER

G12 GIRDER DESIGNATION

CONTROL SECTION		JOB NO.	
DES. BY	L. LAU	CHK. BY	M. CHEN
DWN. BY	J. BOGNAR		
EST. BY	C. MANJUNATH	CHK. BY	M. CHEN
SPECS. BY	B. KARALIUS		
IN CHARGE OF	B. KARALIUS		

1/8" = 1'-0"

1'0 2' 4' 8' 16'

REVISION	BY	CKD.	DATE

NEW JERSEY DEPARTMENT OF TRANSPORTATION
BUREAU OF STRUCTURAL ENGINEERING

WESTBOUND DECK SLAB PLAN – 1

ROUTE 22 LIBERTY AVENUE & CONRAIL BRIDGE
CONTRACT NO. 057009080

HILLSIDE TOWNSHIP
MUNICIPALITY

UNION
COUNTY

PB AMERICAS, INC.
CERTIFICATION OF AUTHORIZATION NO. 24GA28029800

Bruce J. Karalius
BRUCE J. KARALIUS
NEW JERSEY PROFESSIONAL ENGINEER LICENSE NO. 26369

SCALE: AS SHOWN

BRIDGE
SHEET NO. B56 of B128

163

PARSONS BRINCKERHOFF CADD DATA
OPERATOR marluena
PLOT DATE 01-DEC-2009 14:25
PENTABLE str-full.tbl
DESIGN FILE T:\00404\struct\Bridge.1\dp01_a.dgn

STATE	FEDERAL PROJECT NO.	SHEET	TOTAL SHEETS
N.J.	FS-BR-0040 (168)		

STRUCTURE NO. 2004-164

ROUTE 22 OVER CONRAIL AND LIBERTY AVENUE
(FORMERLY STR. NO. 2004-153)

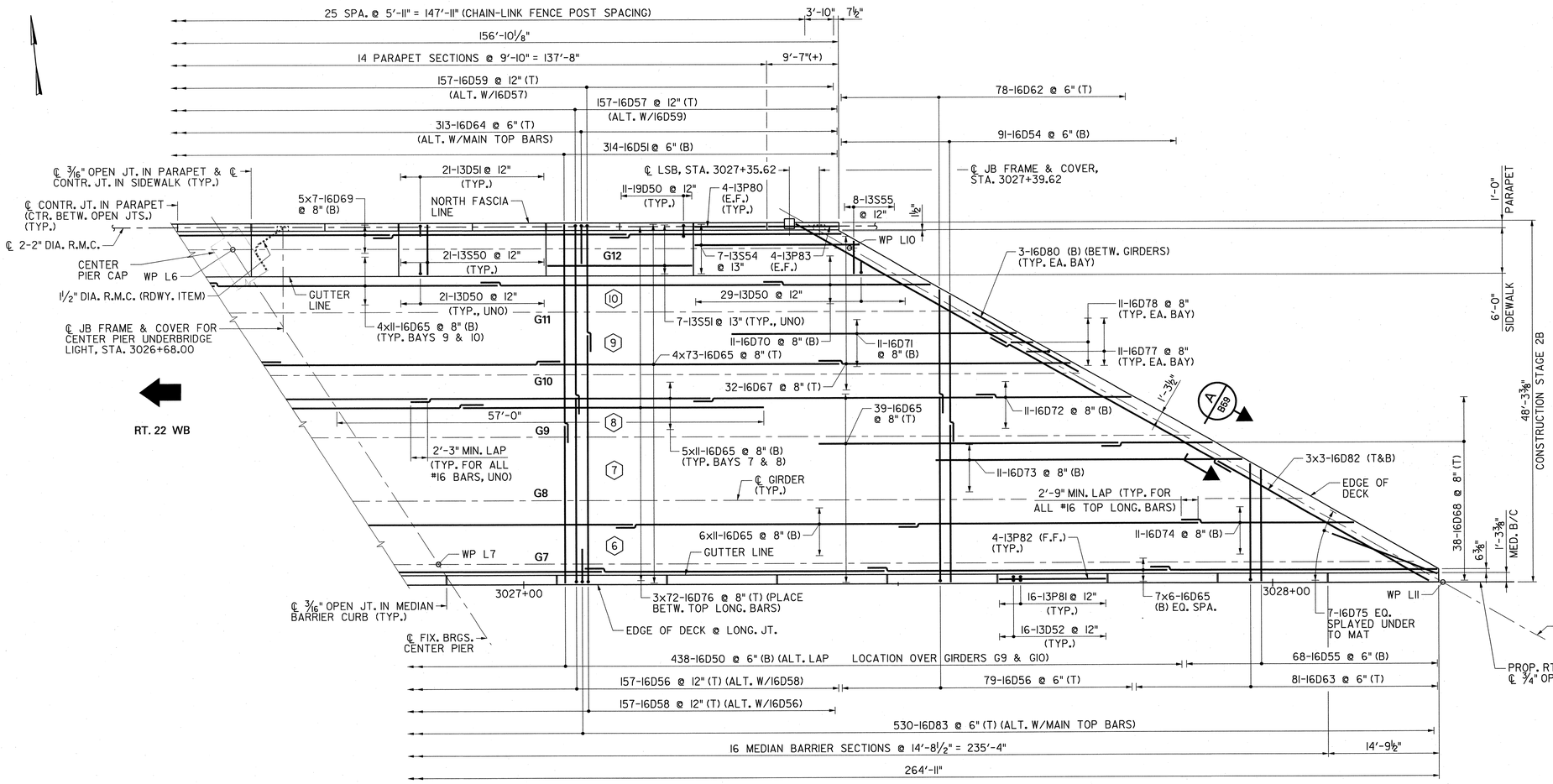

PLAN – EAST SPAN

⅛" = 1'-0"

NOTE:

1. FOR NOTES, SEE SH. B53.

LEGEND:

(10) BAY NUMBER

G12 GIRDER DESIGNATION

PARSONS BRINCKERHOFF CADD DATA	
OPERATOR	marquema
PLOT DATE	01-DEC-2009 14:25
PENTABLE	strfull.tbl
DESIGN FILE	T:\00404\struc\Bridge\ldp01_b.dgn

CONTROL SECTION		JOB NO.	
DES. BY	L. LAU	CHK. BY	M. CHEN
DWN. BY	J. BOGNAR		
EST. BY	C. MANJUNATH	CHK. BY	M. CHEN
SPECS. BY	B. KARALIUS		
IN CHARGE OF	B. KARALIUS		

1/8" = 1'-0"

1'0 2' 4' 8' 16'

REVISION	BY	CKD.	DATE

NEW JERSEY DEPARTMENT OF TRANSPORTATION
BUREAU OF STRUCTURAL ENGINEERING

WESTBOUND DECK SLAB PLAN – 2

ROUTE 22 LIBERTY AVENUE & CONRAIL BRIDGE
CONTRACT NO. 057009080

HILLSIDE TOWNSHIP
MUNICIPALITY

UNION
COUNTY

PB AMERICAS, INC.
CERTIFICATION OF AUTHORIZATION NO. 24GA28029800
BRUCE J. KARALIUS
NEW JERSEY PROFESSIONAL ENGINEER LICENSE NO. 26369

SCALE: AS SHOWN

BRIDGE SHEET NO. B57 of B128

164

STATE	FEDERAL PROJECT NO.	SHEET	TOTAL SHEETS
N.J.	FS-BR-0040 (168)		

STRUCTURE NO. 2004-164

ROUTE 22 OVER CONRAIL AND LIBERTY AVENUE
(FORMERLY STR. NO. 2004-153)

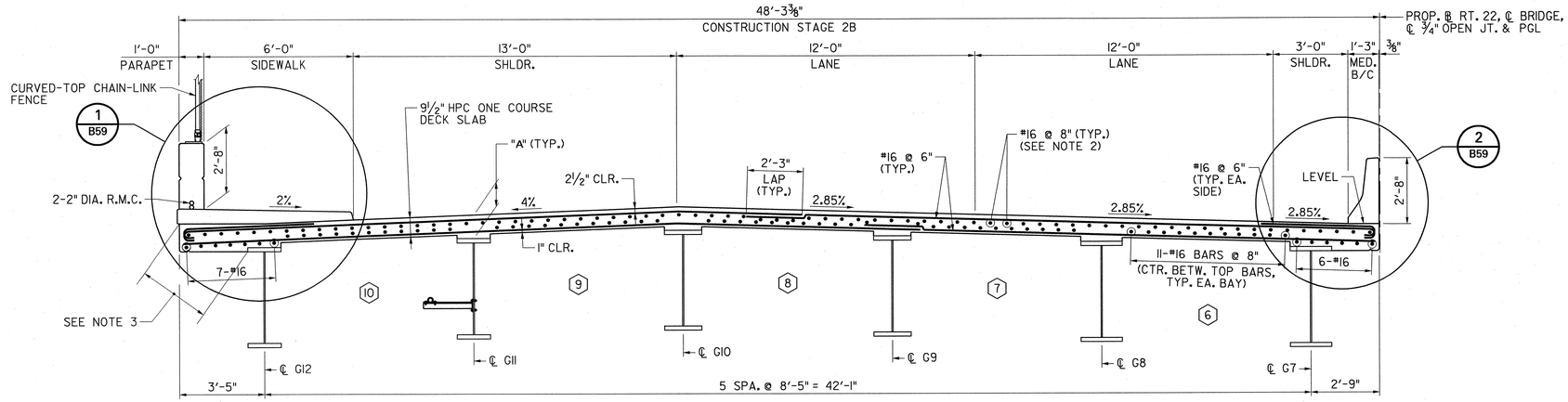

WESTBOUND

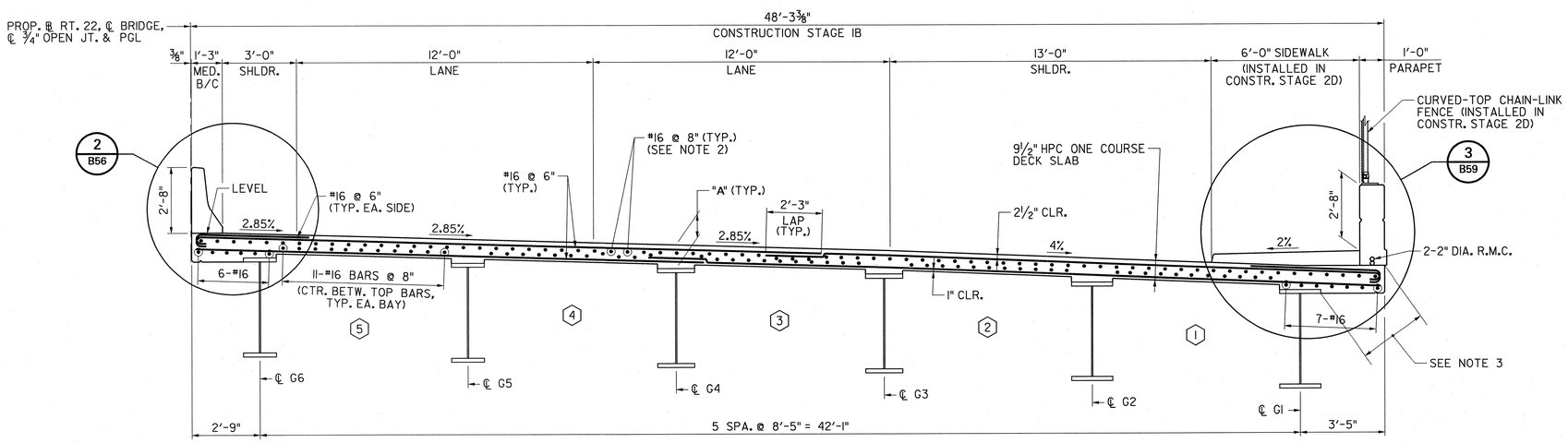

EASTBOUND

TYPICAL DECK SECTIONS

(LOOKING EAST)
⅜" = 1'-0"

NOTE:

DIAPHRAGMS AND SHEAR STUDS NOT SHOWN FOR CLARITY.

NOTE:

1. FOR NOTES, SEE SH. B53.
2. ADDITIONAL TOP LONGITUDINAL REINFORCEMENT AT PIERS IS TO BE CENTERED BETWEEN REGULAR LONGITUDINAL REINFORCEMENT, SEE DECK SLAB PLAN.
3. THE EXPOSED FACE OF THE DECK SLAB, INCLUDING THE UNDERSIDE, FOR THE ENTIRE LENGTH OF THE BRIDGE ON THE SOUTH SIDE OF THE EASTBOUND ROADWAY, IS TO BE STAINED BROWN, FEDERAL CHIP NO. 30111. FOR STAINING REQUIREMENTS SEE SUBSECTION 613.03.03 - F OF THE SPECIAL PROVISIONS. COST OF STAINING IS TO BE INCLUDED IN PAY ITEM "CONCRETE BRIDGE DECK, HPC".

DIMENSION 'A'

LOCATION	GIRDER	'A' (IN)
W. ABUT. & E. ABUT.	G1 & G2	14.625
	G3 - G6	14.250
	G7 - G10	14.625
	G11 & G12	14.250
W. PIER & E. PIER	G1 - G6	13.500
C. PIER	G7, G8, G11, G12	13.500
	G9 & G10	13.375

MEASURED FROM T/DECK TO T/TOP FLANGE

LEGEND:

(1) BAY NUMBER

3/8" = 1'-0"

1' 0 2' 4' 8'

REVISION	BY	CKD.	DATE

CONTROL SECTION		JOB NO.	
DES. BY	L. LAU	CHK. BY	M. CHEN
DWN. BY	J. BOGNAR		
EST. BY	C. MANJUNATH	CHK. BY	M. CHEN
SPECS. BY	B. KARALIUS		
IN CHARGE OF	B. KARALIUS		

PARSONS BRINCKERHOFF CADD DATA
OPERATOR marquemo
PLOT DATE 01-DEC-2009 14:25
PENTABLE str_ful.tbl
DESIGN FILE T:\00404\struc\Bridge_1\dp01_f.dgn

NEW JERSEY DEPARTMENT OF TRANSPORTATION
BUREAU OF STRUCTURAL ENGINEERING

TYPICAL DECK SLAB SECTIONS

ROUTE 22 LIBERTY AVENUE & CONRAIL BRIDGE
CONTRACT NO. 057009080

HILLSIDE TOWNSHIP MUNICIPALITY — UNION COUNTY

PB AMERICAS, INC.
CERTIFICATION OF AUTHORIZATION NO. 24GA28029800
Bruce J. Karalius
BRUCE J. KARALIUS
NEW JERSEY PROFESSIONAL ENGINEER LICENSE NO. 26369

SCALE: AS SHOWN

BRIDGE SHEET NO. B58 of B128

STATE	FEDERAL PROJECT NO.	SHEET	TOTAL SHEETS
N.J.	FS-BR-0040 (168)		

STRUCTURE NO. 2004-164

ROUTE 22 OVER CONRAIL AND LIBERTY AVENUE
(FORMERLY STR. NO. 2004-153)

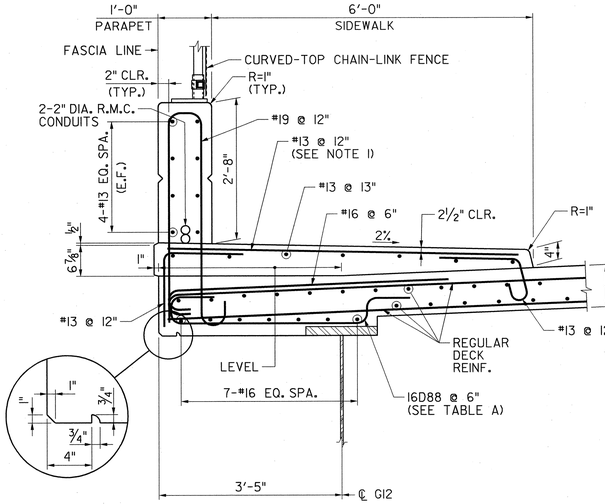

DETAIL 1 (B58)
¾" = 1'-0"

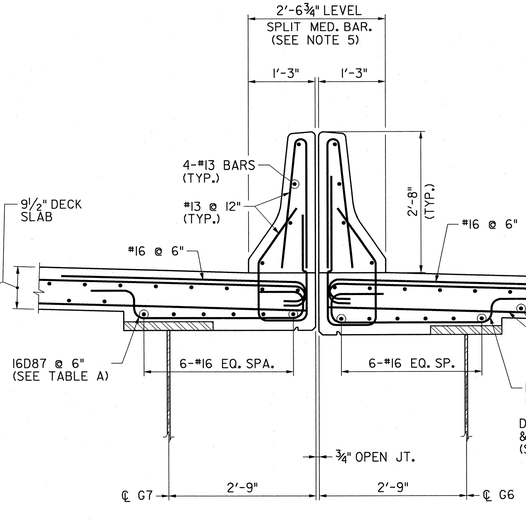

DETAIL 2 (B58)
¾" = 1'-0"

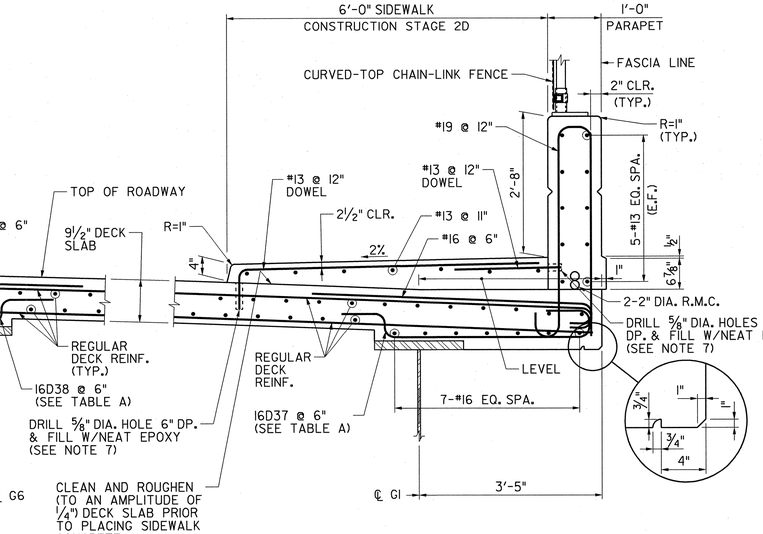

DETAIL 3 (B58)
¾" = 1'-0"

NOTES:

1. AS AN OPTION, THE CONTRACTOR MAY PROVIDE ONE BAR FOLLOWING THE SHAPE OF THE SIDEWALK RATHER THAN THREE SEPARATE BARS AS SHOWN IN THE NJDOT STANDARD BRIDGE CONSTRUCTION DETAILS, BCD-507-2, AT NO ADDITIONAL COST TO THE DEPARTMENT.
2. THE DIMENSION VARIES AS PER MANUFACTURER. THE CONTRACTOR SHALL MAKE ALL NECESSARY ADJUSTMENTS TO ALL ASSOCIATED BRIDGE COMPONENTS BASED ON THE ACTUAL DIMENSION.
3. RIBS ARE ASSUMED TO BE 2" DEEP. SPECIAL DESIGN CONSIDERATIONS ARE REQUIRED FOR DEEPER FORMS.
4. W1 SHALL BE EQUAL TO OR LESS THAN W2.
5. FOR SPLIT MEDIAN BARRIER CURB DETAILS, SEE NJDOT STANDARD BRIDGE CONSTRUCTION DETAILS, DRAWING BCD-507-9.
6. FOR LOCATIONS OF ⅞" DIAMETER ANCHOR STUDS, SEE SH. B51.
7. HOLES ARE TO BE LOCATED SUCH THAT NO DECK OR PARAPET REINFORCEMENT IS DAMAGED.

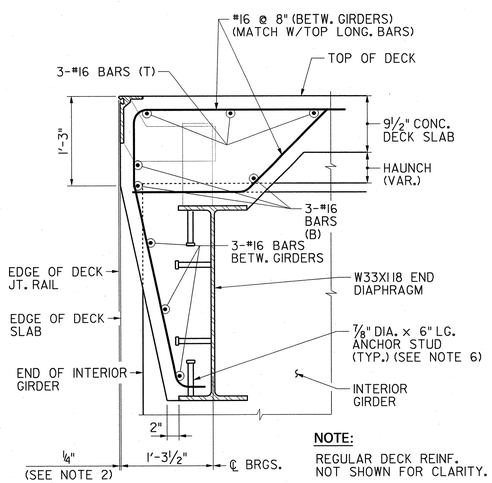

NOTE:

REGULAR DECK REINF. NOT SHOWN FOR CLARITY.

SECTION A (B53,55,56,57)
1" = 1'-0"

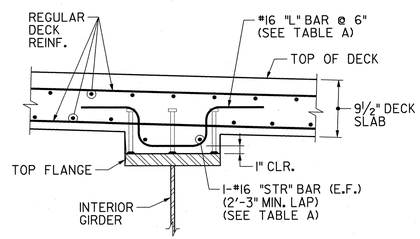

INTERIOR GIRDER HAUNCH REINFORCEMENT DETAIL

1" = 1'-0"

TABLE A – HAUNCH BARS				
LOCATION	GIRDER	MARK	TYPE	TOTAL NO. OF BARS
EB	G1	16D37	S	127
	G2	16D33	STR	4
		16D36	L	127
	G3 & G4	16D33	STR	4
		16D35	L	130
	G5	16D33	STR	2
		16D34	L	65
	G6	16D38	S	65
WB	G7	16D87	S	127
	G8	16D89	STR	4
		16D86	L	127
	G9 & G10	16D89	STR	8
		16D85	L	254
	G11	16D89	STR	2
		16D84	L	65
	G12	16D88	S	65

NOTES:

A. TYPE "L" BARS TO BE CENTERED ABOUT GIRDER.

B. TYPE "S" BARS TO BE CENTERED BETWEEN REGULAR BOTTOM DECK REINFORCEMENT. TYPE "L" BARS TO BE PAIRED WITH REGULAR BOTTOM TRANSVERSE DECK REINFORCEMENT.

C. PLACE THE HAUNCH REINFORCEMENT STARTING AT THE CENTERLINE OF BEARINGS OF EACH ABUTMENT AND ROTATE BARS AS REQUIRED.

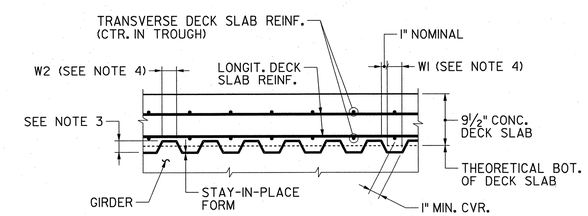

LONGITUDINAL SLAB SECTION / STAY-IN-PLACE FORM DETAIL

N.T.S.

1" = 1'-0"
3/4" = 1'-0"

REVISION	BY	CKD.	DATE

NEW JERSEY DEPARTMENT OF TRANSPORTATION
BUREAU OF STRUCTURAL ENGINEERING

DECK SLAB DETAILS – 1

ROUTE 22 LIBERTY AVENUE & CONRAIL BRIDGE
CONTRACT NO. 057009080

HILLSIDE TOWNSHIP MUNICIPALITY — UNION COUNTY

PB AMERICAS, INC.
CERTIFICATION OF AUTHORIZATION NO. 24GA28029800
BRUCE J. KARALIUS
NEW JERSEY PROFESSIONAL ENGINEER LICENSE NO. 26369

SCALE: AS SHOWN

BRIDGE SHEET NO. B59 of B128

166

CONTROL SECTION		JOB NO.	
DES. BY	L. LAU	CHK. BY	M. CHEN
DWN. BY	J. BOGNAR		
EST. BY	C. MANJUNATH	CHK. BY	M. CHEN
SPECS. BY	B. KARALIUS		
IN CHARGE OF	B. KARALIUS		

PARSONS BRINCKERHOFF CADD DATA
OPERATOR marluenc
PLOT DATE 01-DEC-2009 14:25
PENTABLE strfull.tbl
DESIGN FILE T:\0040\Struct\Bridge\dp01_q.dgn

STATE	FEDERAL PROJECT NO.	SHEET	TOTAL SHEETS
N.J.	FS-BR-0040 (168)		

STRUCTURE NO. 2004-164

ROUTE 22 OVER CONRAIL AND LIBERTY AVENUE
(FORMERLY STR. NO. 2004-153)

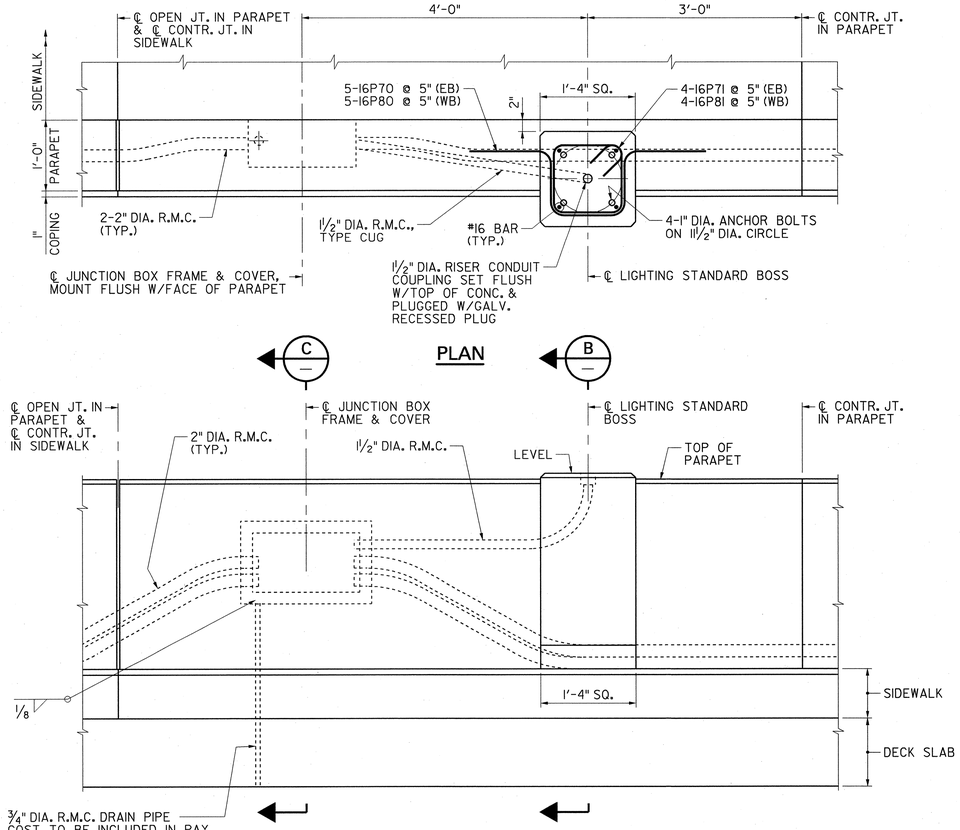

ELEVATION

LIGHTING STANDARD BOSS DETAILS

1" = 1'-0"

NOTES:

A. FOR LOCATION OF LIGHTING STANDARD BOSSES, SEE DECK SLAB PLANS.

B. CHAIN-LINK FENCE NOT SHOWN FOR CLARITY.

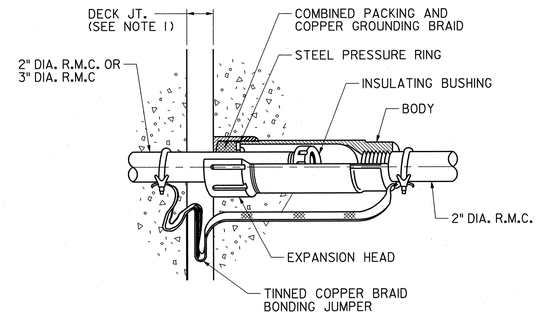

R.M.C. EXPANSION FITTING DETAIL

N.T.S.

NOTES:

1. EXPANSION FITTINGS SHALL BE PROVIDED ACROSS THE DECK JOINTS AT THE ABUTMENTS FOR THE R.M.C. FOR ADDITIONAL DETAILS SEE BRIDGE CONSTRUCTION DETAIL DRAWING BCD-504-3. COST OF EXPANSION FITTINGS SHALL BE INCLUDED IN THE COST OF THE ASSOCIATED CONDUIT.

2. MATERIAL FOR JUNCTION BOX FRAME SHALL CONFORM TO AASHTO M270, GRADE 36(ASTM A709, GRADE 36) AND SHALL BE HOT DIP GALVANIZED.

3. FOR ADDITIONAL DETAILS OF LIGHTING STANDARD BOSS ON 2'-8" PARAPET SEE NJDOT BRIDGE CONSTRUCTION DETAIL DRAWING BCD 504-5.1.

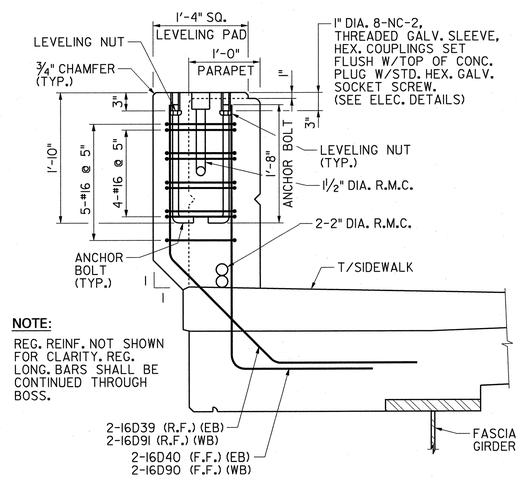

NOTE:

REG. REINF. NOT SHOWN FOR CLARITY. REG. LONG. BARS SHALL BE CONTINUED THROUGH BOSS.

SECTION B
1" = 1'-0"

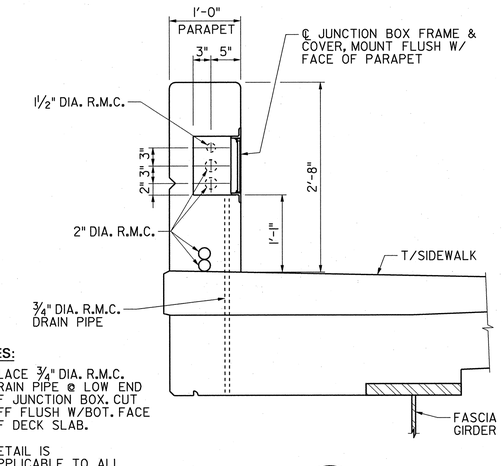

NOTES:

A. PLACE ¾" DIA. R.M.C. DRAIN PIPE @ LOW END OF JUNCTION BOX. CUT OFF FLUSH W/BOT. FACE OF DECK SLAB.

B. DETAIL IS APPLICABLE TO ALL BRIDGE MOUNTED JUNCTION BOXES.

SECTION C
1" = 1'-0"

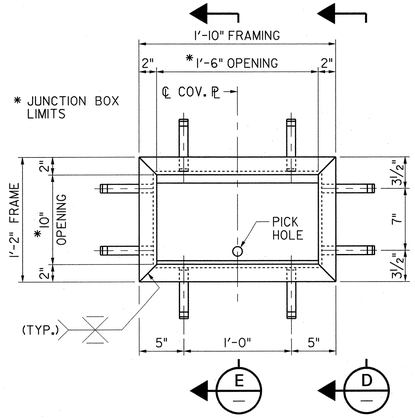

ELEVATION

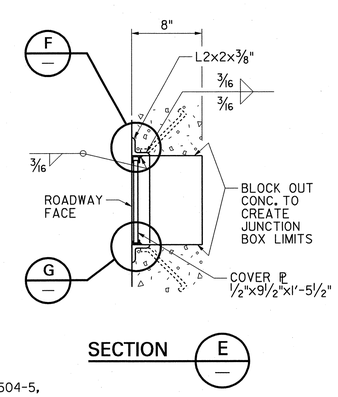

SECTION E

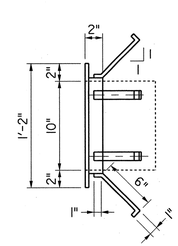

SECTION D

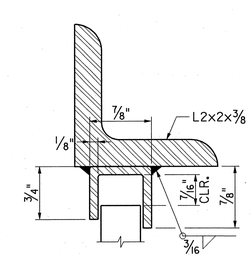

DETAIL F

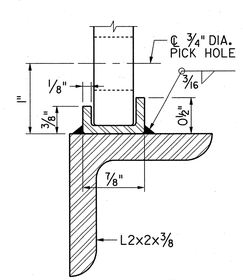

DETAIL G

NOTE:

SEE NJDOT STANDARD BRIDGE CONSTRUCTION DETAILS BCD-504-5, FOR ADDITIONAL DETAILS AND INFORMATION NOT SHOWN.

JUNCTION BOX FRAME AND COVER DETAILS

N.T.S.

1" = 1'-0"

1' 6" 0 1' 2'

REVISION	BY	CKD.	DATE

NEW JERSEY DEPARTMENT OF TRANSPORTATION
BUREAU OF STRUCTURAL ENGINEERING

DECK SLAB DETAILS – 2

ROUTE 22 LIBERTY AVENUE & CONRAIL BRIDGE
CONTRACT NO. 057009080

HILLSIDE TOWNSHIP MUNICIPALITY — UNION COUNTY

PB AMERICAS, INC.
CERTIFICATION OF AUTHORIZATION NO. 24GA28029800
BRUCE J. KARALIUS
NEW JERSEY PROFESSIONAL ENGINEER LICENSE NO. 26369

SCALE: AS SHOWN

BRIDGE SHEET NO. B60 of B128

167

CONTROL SECTION		JOB NO.	
DES. BY	L. LAU	CHK. BY	M. CHEN
DWN. BY	M. P. MARUE		
EST. BY	C. MANJUNATH	CHK. BY	M. CHEN
SPECS. BY	B. KARALIUS		
IN CHARGE OF	B. KARALIUS		

PARSONS BRINCKERHOFF CADD DATA
OPERATOR marruema
PLOT DATE 01-DEC-2009 14:25
PENTABLE str-full.tbl
DESIGN FILE T:\00040A\struc\Bridge_1\db01_h.dgn

STATE	FEDERAL PROJECT NO.	SHEET	TOTAL SHEETS
N.J.	FS-BR-0040 (168)		

STRUCTURE NO. 2004-164

ROUTE 22 OVER CONRAIL AND LIBERTY AVENUE
(FORMERLY STR. NO. 2004-153)

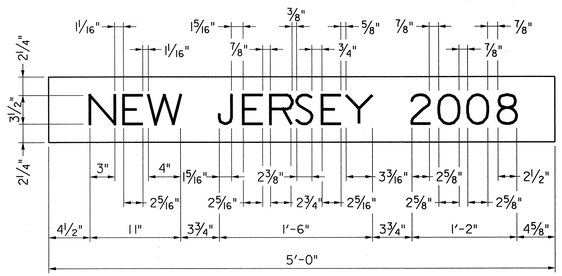

DETAIL – CAST STONE LET. PANEL (5'-0")

(PANEL DATE SHALL BE YEAR OF BRIDGE COMPLETION)

NOTE:

PANEL TO BE APPROVED BY THE ENGINEER, BEFORE INCORPORATING PANEL IN THE WORK.

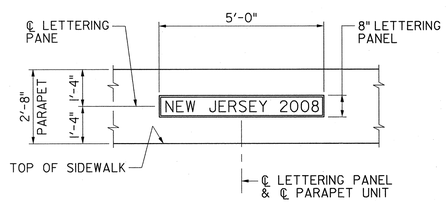

INTERIOR ELEVATION – PARAPET PANEL

NOTE:

OMIT HORIZONTAL V-GROOVE IN FACE OF PARAPET WHERE LETTERING PANEL IS ATTACHED; TERMINATE HORIZONTAL V-GROOVE AS SHOWN IN "DATE PANEL" DETAIL ON BRIDGE CONSTRUCTION DETAIL BCD-504-3. SEE BCD-504-3 FOR OTHER DETAILS AND REQUIREMENTS. ONE DATE PANEL IS TO BE INSTALLED AS SHOWN ON THE GENERAL PLAN AND ELEVATION.

DETAILS OF CAST STONE LETTERING PANEL

N.T.S.

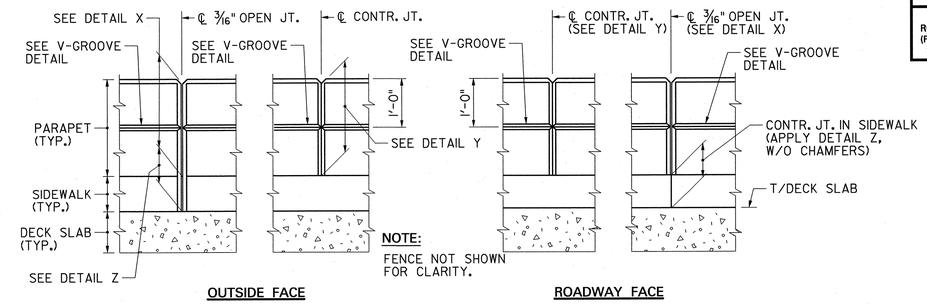

PARAPET ELEVATIONS

N.T.S.

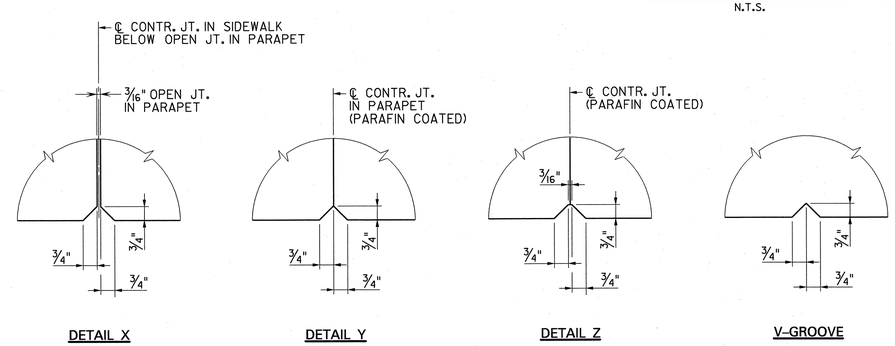

PARAPET AND MEDIAN BARRIER JOINT DETAILS

N.T.S.

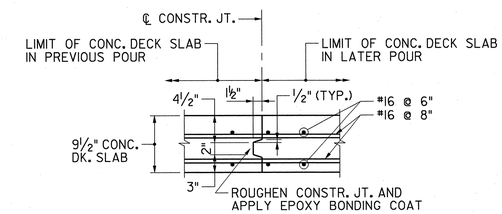

KEY AT TRANSVERSE CONSTRUCTION JOINT

SECTION 7/—
N.T.S.

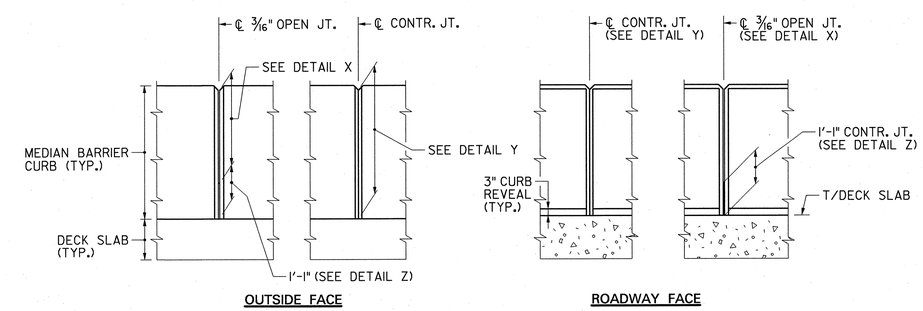

MEDIAN BARRIER CURB ELEVATIONS

N.T.S.

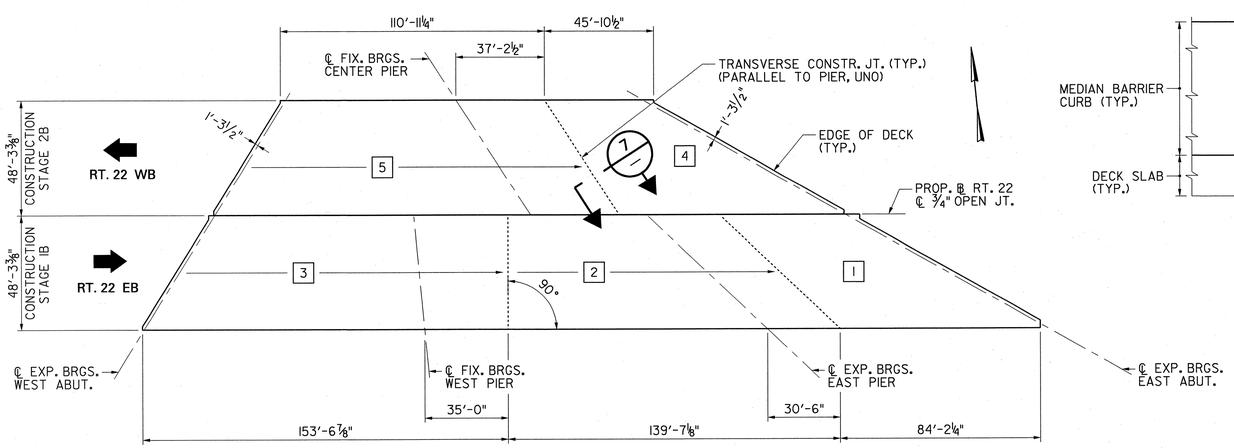

LEGEND:

1 INDICATES POURING SEQUENCE

← INDICATES DIRECTION OF POURING

PLAN – POURING SEQUENCE

N.T.S.

REVISION	BY	CKD.	DATE

NEW JERSEY DEPARTMENT OF TRANSPORTATION
BUREAU OF STRUCTURAL ENGINEERING

DECK SLAB DETAILS – 3

ROUTE 22 LIBERTY AVENUE & CONRAIL BRIDGE
CONTRACT NO. 057009080

HILLSIDE TOWNSHIP — MUNICIPALITY
UNION — COUNTY

PB AMERICAS, INC.
CERTIFICATION OF AUTHORIZATION NO. 24GA28029800
BRUCE J. KARALIUS
NEW JERSEY PROFESSIONAL ENGINEER LICENSE NO. 26369

SCALE: AS SHOWN

BRIDGE SHEET NO. B61 of B128

168

CONTROL SECTION		JOB NO.	
DES. BY	L. LAU	CHK. BY	M. CHEN
DWN. BY	M. P. MARUE		
EST. BY	C. MANJUNATH	CHK. BY	M. CHEN
SPECS. BY	B. KARALIUS		
IN CHARGE OF	B. KARALIUS		

PARSONS BRINCKERHOFF CADD DATA
OPERATOR marluemo
PLOT DATE 01-DEC-2009 14:26
PENTABLE strfull.tbl
DESIGN FILE T:\00404\struct\Bridge1\dp01.dgn

STATE	FEDERAL PROJECT NO.	SHEET	TOTAL SHEETS
N.J.	FS-BR-0040 (168)		

STRUCTURE NO. 2004-164

ROUTE 22 OVER CONRAIL AND LIBERTY AVENUE
(FORMERLY STR. NO. 2004-153)

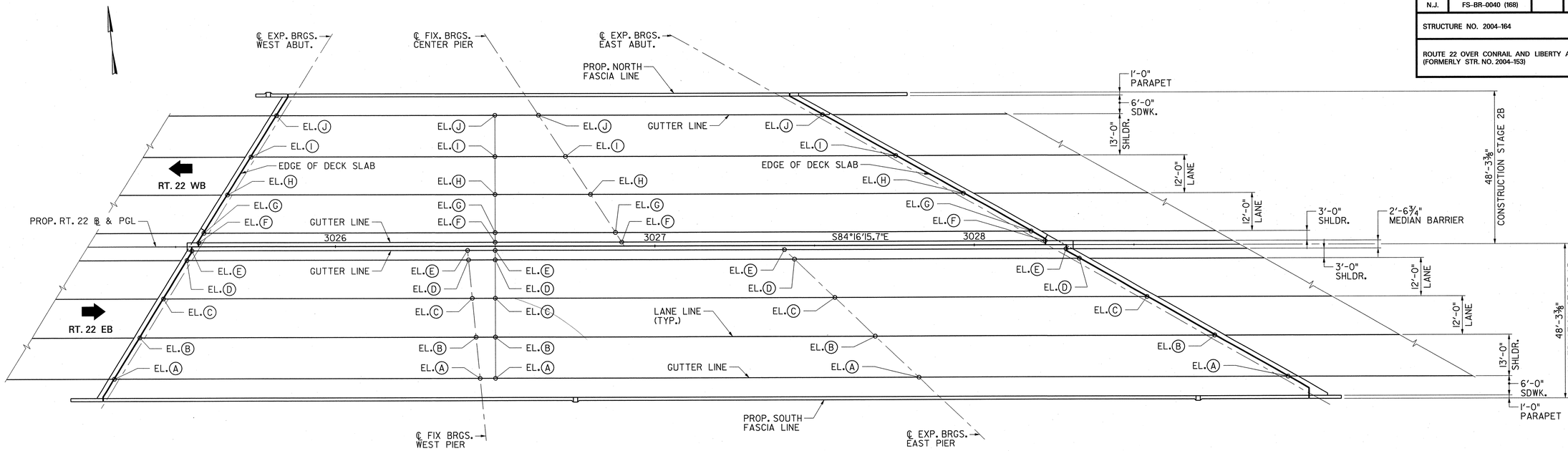

TOP OF DECK – PLAN

1/16" = 1'-0"

TOP OF DECK ELEVATIONS - EASTBOUND

STATION	GUTTER LINE EL. A	SHOULDER LINE EL. B	LANE LINE EL. C	LANE LINE EL. D	GUTTER LINE EL. E
3024+00	93.88	94.40	94.74	95.09	95.17
3024+25	94.93	95.45	95.79	96.14	96.22
3024+50	95.91	96.43	96.77	97.11	97.20
3024+75	96.81	97.33	97.67	98.01	98.10
3025+00	97.64	98.16	98.50	98.84	98.93
3025+25	98.39	98.91	99.25	99.60	99.68
3025+50	99.07	99.59	99.93	100.28	100.36
3025+75	99.68	100.20	100.54	100.88	100.97
3026+00	100.21	100.73	101.07	101.41	101.50
3026+25	100.67	101.19	101.53	101.87	101.95
3026+50	101.05	101.57	101.91	102.25	102.34
3026+75	101.36	101.88	102.22	102.56	102.65
3027+00	101.59	102.11	102.45	102.79	102.88
3027+25	101.75	102.27	102.61	102.95	103.04
3027+50	101.84	102.36	102.70	103.04	103.13
3027+75	101.85	102.37	102.71	103.05	103.14
3028+00	101.79	102.31	102.65	102.99	103.07
3028+25	101.65	102.17	102.51	102.85	102.94
3028+50	101.44	101.96	102.30	102.64	102.73
3028+75	101.15	101.67	102.01	102.36	102.44
3029+00	100.79	101.31	101.66	102.00	102.08
3029+25	100.36	100.88	101.22	101.56	101.65
* W. ABUT.	98.55	99.29	99.83	100.37	100.49
W. PIER	100.98	101.48	101.81	102.13	102.21
E. PIER	101.84	102.37	102.71	103.03	103.10
* E. ABUT.	100.82	101.67	102.26	102.79	102.91

TOP OF DECK ELEVATIONS - WESTBOUND

STATION	GUTTER LINE EL. F	SHOULDER LINE EL. G	LANE LINE EL. H	LANE LINE EL. I	GUTTER LINE EL. J
3024+00	95.17	95.26	95.60	95.94	95.42
3024+25	96.22	96.31	96.65	96.99	96.47
3024+50	97.20	97.28	97.63	97.97	97.45
3024+75	98.10	98.19	98.53	98.87	98.35
3025+00	98.93	99.01	99.36	99.70	99.18
3025+25	99.68	99.77	100.11	100.45	99.93
3025+50	100.36	100.45	100.79	101.13	100.61
3025+75	100.97	101.05	101.39	101.74	101.22
3026+00	101.50	101.58	101.93	102.27	101.75
3026+25	101.95	102.04	102.38	102.72	102.20
3026+50	102.34	102.42	102.76	103.11	102.59
3026+75	102.65	102.73	103.07	103.42	102.90
3027+00	102.88	102.97	103.31	103.65	103.13
3027+25	103.04	103.13	103.47	103.81	103.29
3027+50	103.13	103.21	103.55	103.90	103.38
3027+75	103.14	103.22	103.57	103.91	103.39
3028+00	103.07	103.16	103.50	103.84	103.32
3028+25	102.94	103.02	103.37	103.71	103.19
3028+50	102.73	102.81	103.15	103.50	102.98
3028+75	102.44	102.53	102.87	103.21	102.69
3029+00	102.08	102.17	102.51	102.85	102.33
3029+25	101.65	101.73	102.08	102.42	101.90
* W. ABUT.	100.54	100.67	101.19	101.70	101.36
CTR. PIER	102.79	102.86	103.12	103.38	102.76
* E. ABUT.	102.96	103.07	103.51	103.91	103.38

NOTE:
* AT EDGE OF DECK SLAB.

1/16" = 1'-0"
1'0 2'4' 8' 16' 32'

REVISION	BY	CKD.	DATE

NEW JERSEY DEPARTMENT OF TRANSPORTATION
BUREAU OF STRUCTURAL ENGINEERING

TOP OF DECK ELEVATIONS

ROUTE 22 LIBERTY AVENUE & CONRAIL BRIDGE
CONTRACT NO. 057009080

HILLSIDE TOWNSHIP — MUNICIPALITY
UNION — COUNTY

PB AMERICAS, INC.
CERTIFICATION OF AUTHORIZATION NO. 24GA28029800
BRUCE J. KARALIUS
NEW JERSEY PROFESSIONAL ENGINEER LICENSE NO. 26369

SCALE: AS SHOWN

BRIDGE SHEET NO. B62 of B128

169

CONTROL SECTION		JOB NO.	
DES. BY	C. MANJUNATH	CHK. BY	M. CHEN
DWN. BY	M. P. MARUE		
EST. BY	C. MANJUNATH	CHK. BY	M. CHEN
SPECS. BY	B. KARALIUS		
IN CHARGE OF	B. KARALIUS		

PARSONS BRINCKERHOFF CADD DATA
OPERATOR mar-uema
PLOT DATE 01-DEC-2009 14:26
PENTABLE str-full.tbl
DESIGN FILE T:\004041\struc\Bridge\Cdp01_t.dgn

STATE	FEDERAL PROJECT NO.	SHEET	TOTAL SHEETS
N.J.	FS-BR-0040 (168)		

STRUCTURE NO. 2004-164

ROUTE 22 OVER CONRAIL AND LIBERTY AVENUE
(FORMERLY STR. NO. 2004-153)

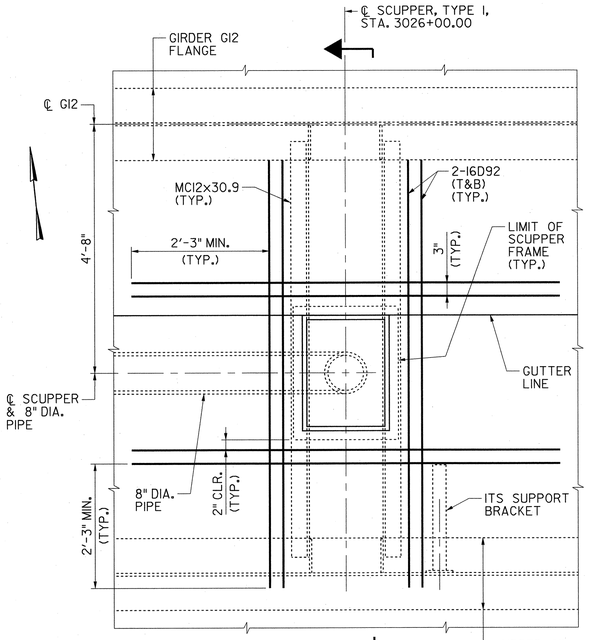

DETAIL 1 (B56)
3/4" = 1'-0"

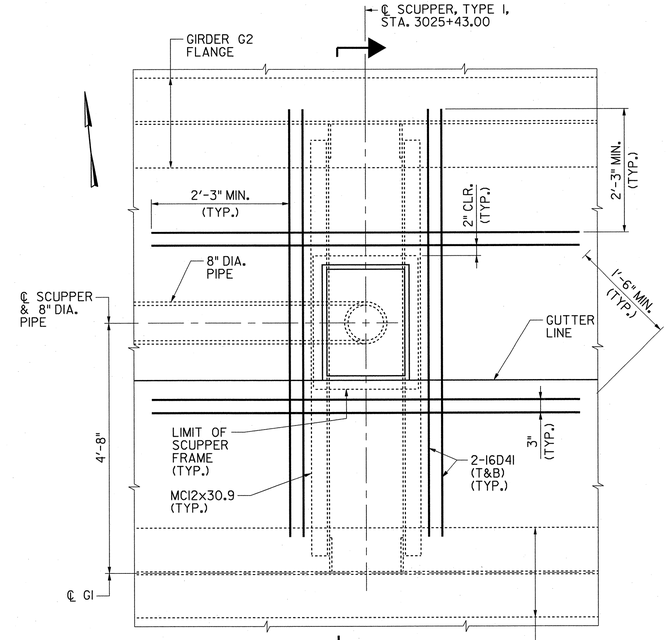

DETAIL 3 (B53)
3/4" = 1'-0"

NOTE:
MC PIPE SUPPORT & SUPPORT BRACKET ARE NOT SHOWN.

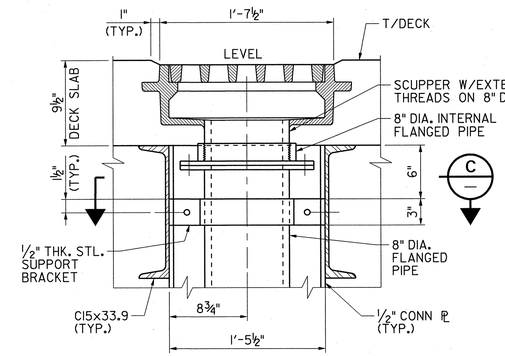

DETAIL 4 (—)
1½" = 1'-0"

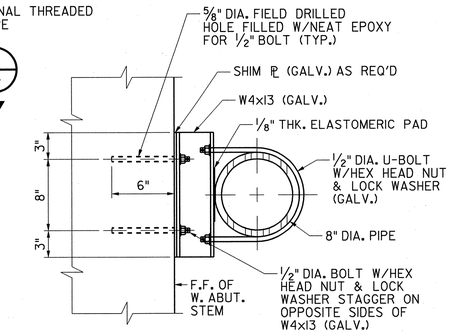

DETAIL 5 (B64)
1½" = 1'-0"

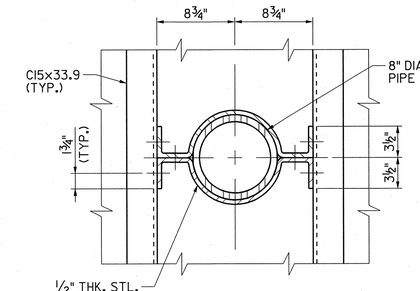

SECTION C
1½" = 1'-0"

NOTES:

1. EXCEPT FOR THE W4x13 SUPPORTS ATTACHED TO THE ABUTMENT, STRUCTURAL STEEL FOR SCUPPER AND PIPE SUPPORTS SHALL CONFORM TO AASHTO M270, GRADE 50W (ASTM A709, GRADE 50W) AND SHALL BE PAINTED BROWN (CHIP NO. 30111). THE COATING SYSTEM TO BE IEW. THE W4x13 SUPPORTS SHALL CONFORM TO AASHTO M270, GRADE 36 OR 50 AND SHALL BE HOT DIP GALVANIZED AS PER ASTM A123.
2. U-BOLTS AND PIPE SUPPORT BRACKETS SHALL BE AS MANUFACTURED BY COOPER B-LINE, OR APPROVED EQUAL. U-BOLTS AND HARDWARE SHALL BE HOT DIP GALVANIZED.
3. BOLTS ASSOCIATED WITH THE SCUPPER AND PIPE SUPPORTS SHALL CONFORM TO ASTM A325, TYPE 3, UNLESS NOTED OTHERWISE.
4. ALL COSTS ASSOCIATED WITH THE PIPE AND SCUPPER SUPPORTS (INCLUDING CONNECTION PLATES, WELDING AND PAINTING), ALL PIPE FITTINGS, AND ALL OTHER ITEMS (SUPPORT BRACKETS, STRUCTURAL ANGLES, PIPE CLEANOUTS, U-BOLTS, ETC.) AND HARDWARE NECESSARY TO INSTALL THE SCUPPER/PIPE SYSTEM SHOWN ARE TO BE INCLUDED IN THE PAY ITEM, "8 STEEL ALLOY PIPE."
5. MAIN DECK SLAB REINFORCEMENT IS NOT SHOWN IN DETAILS AND SECTIONS. REINFORCEMENT IS TO BE CUT AS REQUIRED AT SCUPPERS.

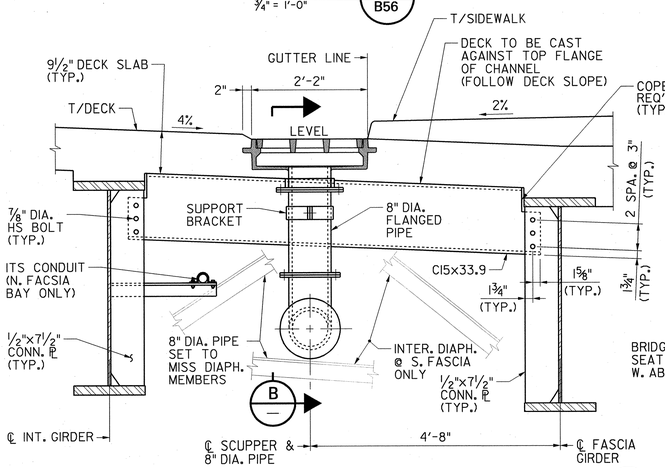

SCUPPER AT STA. 3026+00.00 (N. FASCIA) SHOWN.
SCUPPER AT STA. 3025+43.00 (S. FASCIA) SIMILAR
AS NOTED.

SECTION A
3/4" = 1'-0"

NOTE:
DECK SLAB REINFORCEMENT NOT SHOWN.

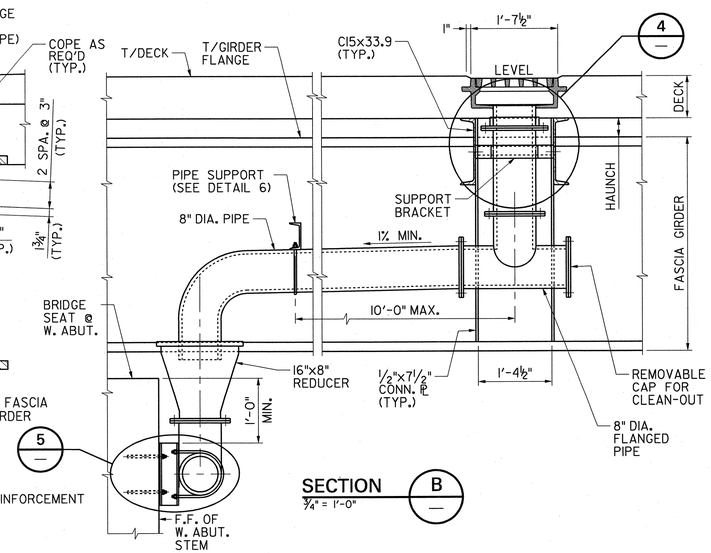

SECTION B
3/4" = 1'-0"

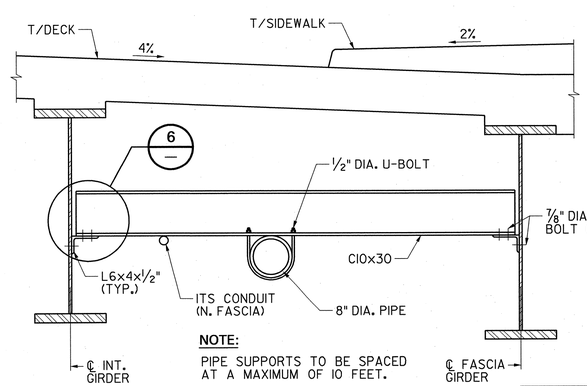

NOTE:
PIPE SUPPORTS TO BE SPACED AT A MAXIMUM OF 10 FEET.

PIPE SUPPORT
3/4" = 1'-0"

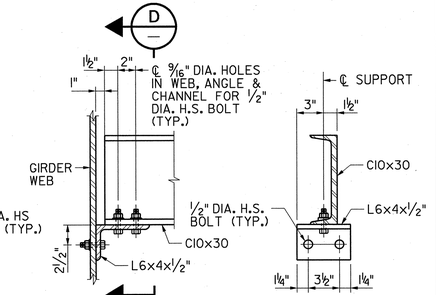

DETAIL 6
1½" = 1'-0"

SECTION D
1½" = 1'-0"

CONTROL SECTION			JOB NO.
DES. BY	L. LAU	CHK. BY	B. KARALIUS
DWN. BY	J. BOGNAR		
EST. BY	C. MANJUNATH	CHK. BY	M. CHEN
SPECS. BY	B. KARALIUS		
IN CHARGE OF	B. KARALIUS		

1 1/2" = 1'-0"
3/4" = 1'-0"

REVISION	BY	CKD.	DATE

NEW JERSEY DEPARTMENT OF TRANSPORTATION
BUREAU OF STRUCTURAL ENGINEERING

DRAINAGE DETAILS – 1

ROUTE 22 LIBERTY AVENUE & CONRAIL BRIDGE
CONTRACT NO. 057009080

HILLSIDE TOWNSHIP MUNICIPALITY — UNION COUNTY

PB AMERICAS, INC.
CERTIFICATION OF AUTHORIZATION NO. 24GA28029800
BRUCE J. KARALIUS
NEW JERSEY PROFESSIONAL ENGINEER LICENSE NO. 26369

SCALE: AS SHOWN

BRIDGE SHEET NO. B63 of B128

170

PARSONS BRINCKERHOFF CADD DATA
OPERATOR mcruema
PLOT DATE 04-DEC-2009 14:26
PENTABLE str4ul4.tbl
DESIGN FILE T:\00404\struc\Bridge_1\dr01_a.dgn

STATE	FEDERAL PROJECT NO.	SHEET	TOTAL SHEETS
N.J.	FS-BR-0040 (168)		

STRUCTURE NO. 2004-164

ROUTE 22 OVER CONRAIL AND LIBERTY AVENUE
(FORMERLY STR. NO. 2004-153)

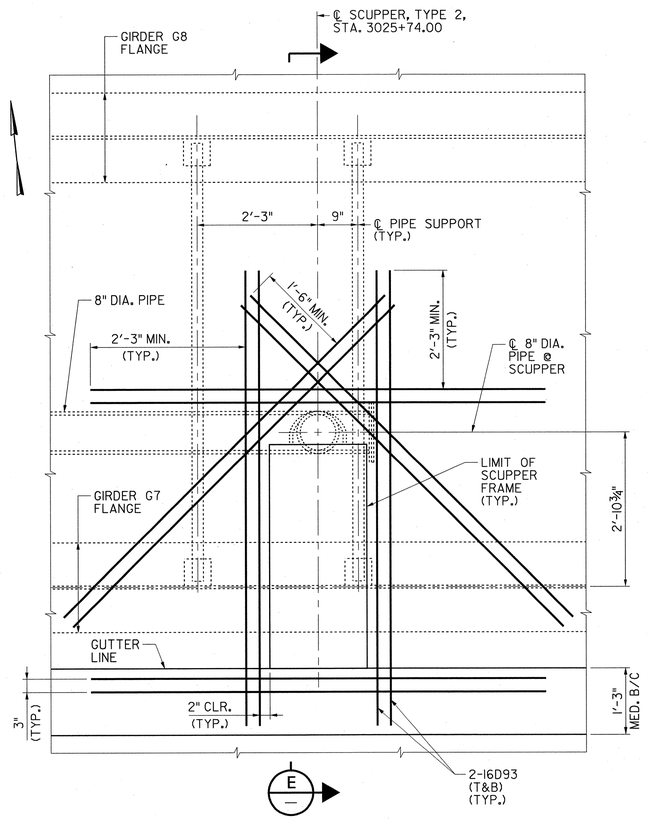

DETAIL 2 / B56
¾" = 1'-0"

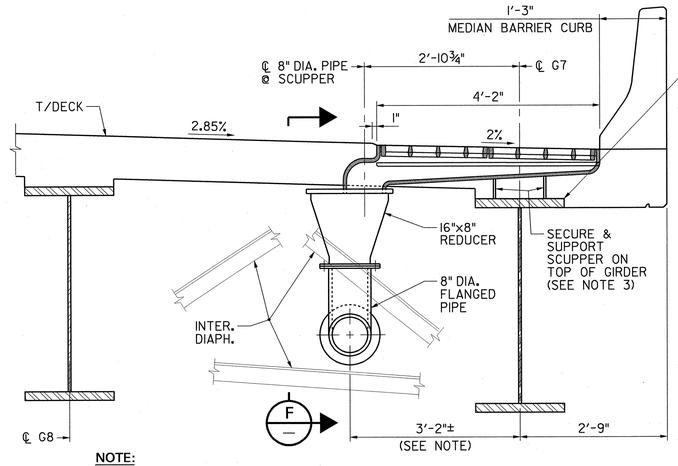

ADJUST SHEAR STUDS TO MISS SCUPPER

NOTE:
LOCATE 8" DIA. PIPE TO PASS THROUGH DIAPHRAGM AS SHOWN. PIPE NOT REQUIRED TO BE PARALLEL TO GIRDER.

SECTION E
¾" = 1'-0"

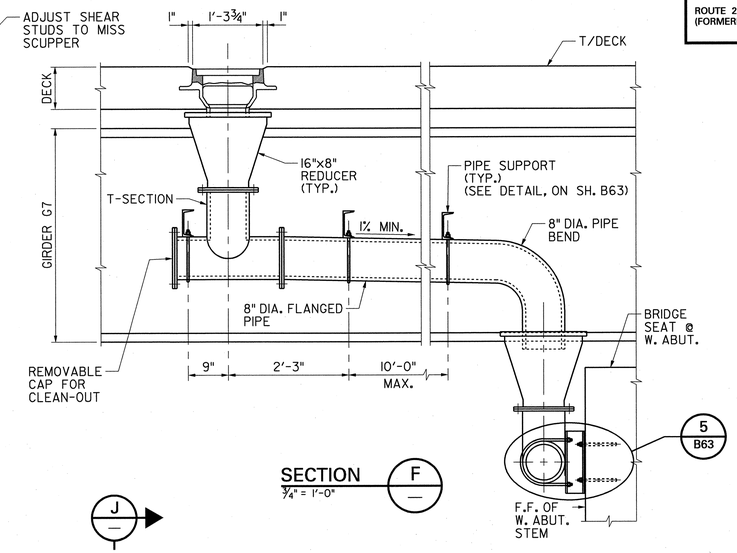

SECTION F
¾" = 1'-0"

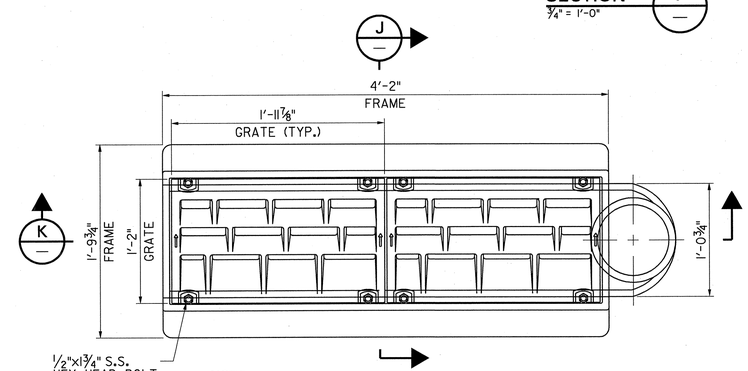

NOTE:
FOR INFORMATION PURPOSES NEENAH FOUNDRY COMPANY SCUPPER NO. R-3951 IS SHOWN. AN APPROVED EQUAL MAY BE USED.

SCUPPER DETAIL – TYPE 2
1½" = 1'-0"

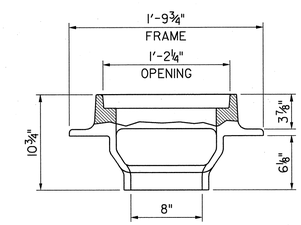

SECTION J
1½" = 1'-0"

NOTES:
1. SCUPPER GRATES SHALL BE BICYCLE SAFE.
2. FOR ADDITIONAL NOTES, SEE SH. B63.
3. SHOP DRAWINGS AND CATALOG CUTS FOR SCUPPERS AND SUPPORTS SHALL BE SUBMITTED FOR THE ENGINEER'S APPROVAL.

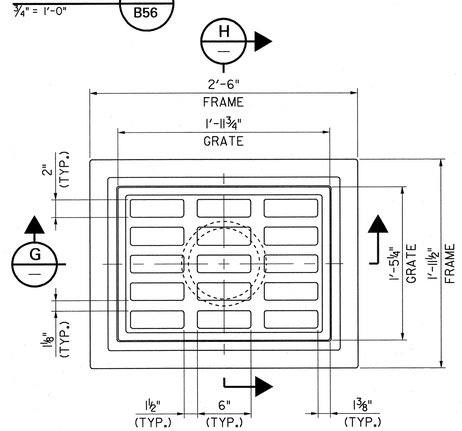

NOTE:
FOR INFORMATION PURPOSES NEENAH FOUNDRY COMPANY SCUPPER NO. R-4004-A IS SHOWN. AN APPROVED EQUAL MAY BE USED.

SCUPPER DETAIL – TYPE 1
1½" = 1'-0"

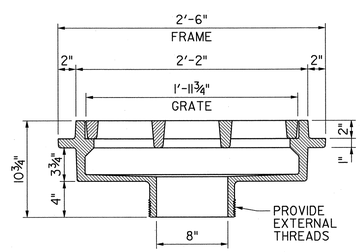

SECTION G
1½" = 1'-0"

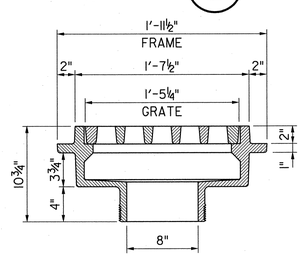

SECTION H
1½" = 1'-0"

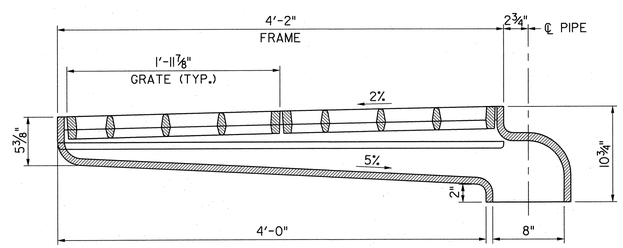

SECTION K
1½" = 1'-0"

1 1/2" = 1'-0"
3/4" = 1'-0"

REVISION	BY	CKD.	DATE

NEW JERSEY DEPARTMENT OF TRANSPORTATION
BUREAU OF STRUCTURAL ENGINEERING

DRAINAGE DETAILS – 2

ROUTE 22 LIBERTY AVENUE & CONRAIL BRIDGE
CONTRACT NO. 057009080

HILLSIDE TOWNSHIP — MUNICIPALITY
UNION — COUNTY

PB AMERICAS, INC.
CERTIFICATION OF AUTHORIZATION NO. 24GA28029800
BRUCE J. KARALIUS
NEW JERSEY PROFESSIONAL ENGINEER LICENSE NO. 26369

SCALE: AS SHOWN

BRIDGE SHEET NO. B64 of B128

171

CONTROL SECTION		JOB NO.	
DES. BY	L. LAU	CHK. BY	B. KARALIUS
DWN. BY	J. BOGNAR		
EST. BY	C. MANJUNATH	CHK. BY	M. CHEN
SPECS. BY	B. KARALIUS		
IN CHARGE OF	B. KARALIUS		

PARSONS BRINCKERHOFF CADD DATA
OPERATOR mar-uema
PLOT DATE 01-DEC-2009 14:26
PENTABLE str-fulltbl
DESIGN FILE T:\00404\struc\Bridge_1\dr01_b.dgn

STATE	FEDERAL PROJECT NO.	SHEET	TOTAL SHEETS
N.J.	FS-BR-0040 (168)		

STRUCTURE NO. 2004-164

ROUTE 22 OVER CONRAIL AND LIBERTY AVENUE
(FORMERLY STR. NO. 2004-153)

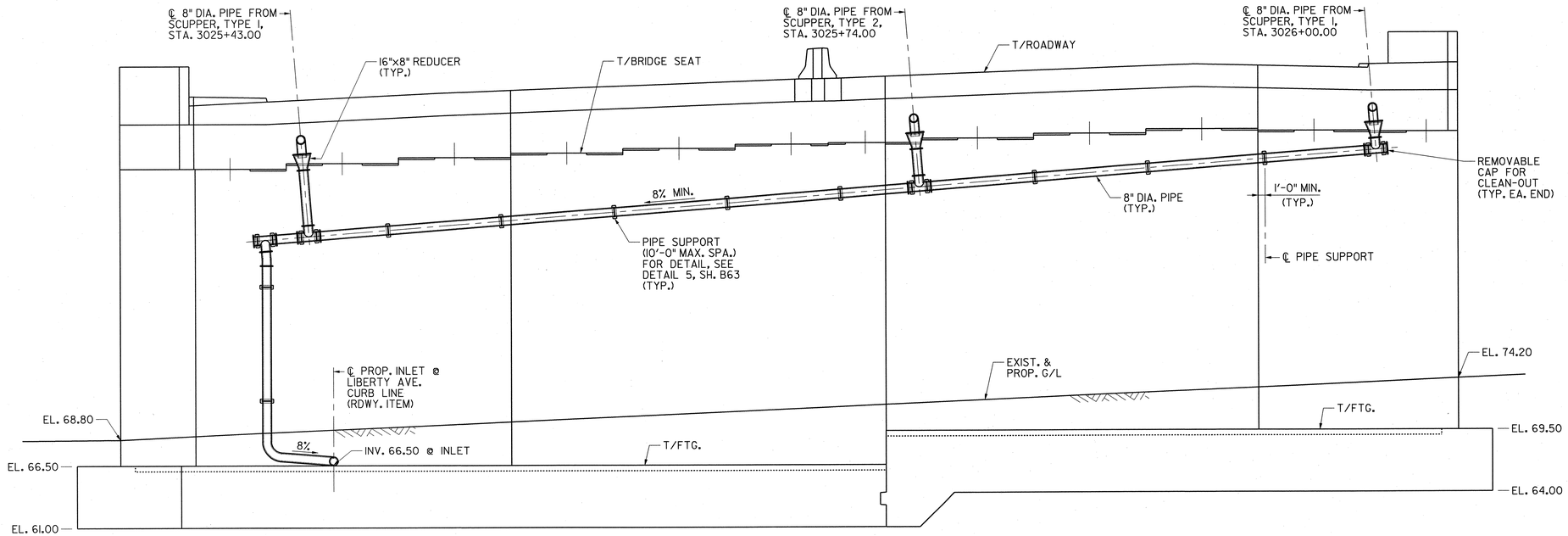

ELEVATION – WEST ABUTMENT

(LOOKING WEST)
3/16" = 1'-0"

NOTES:

1. THE LAYOUT OF THE 8" DIAMETER PIPE SUPPORTS AND CATALOG CUTS FOR THE SCUPPERS AND SUPPORTS SHALL BE INCLUDED IN THE SHOP DRAWINGS FOR APPROVAL.
2. FOR ADDITIONAL NOTES, SEE SHS. B63 & B64.
3. FOR THE LOCATIONS OF SCUPPERS AND SUPPORTS SEE THE FRAMING PLAN AND DECK SLAB PLANS.
4. PIPES AND FITTINGS SHALL CONFORM TO SUBSECTION 909.02.07 OF THE STANDARD SPECIFICATIONS.
5. SHOP DRAWINGS AND CATALOG CUTS SHALL BE SUBMITTED FOR THE SCUPPERS AND SUPPORTS.

QUANTITIES

ITEM NO.	DESCRIPTION	UNIT	CONTRACT QUANTITIES STAGE 1B	STAGE 2B
508006M	SCUPPER	UNIT	1	2
508009P	8" STEEL ALLOY PIPE	LF	135	65

3/16" = 1'-0"
1' 0 2' 4' 8' 16'

REVISION	BY	CKD.	DATE

NEW JERSEY DEPARTMENT OF TRANSPORTATION
BUREAU OF STRUCTURAL ENGINEERING

DRAINAGE DETAILS – 3

ROUTE 22 LIBERTY AVENUE & CONRAIL BRIDGE
CONTRACT NO. 057009080

HILLSIDE TOWNSHIP — MUNICIPALITY
UNION — COUNTY

PB AMERICAS, INC.
CERTIFICATION OF AUTHORIZATION NO. 24GA28029800
BRUCE J. KARALIUS
NEW JERSEY PROFESSIONAL ENGINEER LICENSE NO. 26369

SCALE: AS SHOWN

BRIDGE SHEET NO. B65 of B128

172

CONTROL SECTION		JOB NO.	
DES. BY	L. LAU	CHK. BY	B. KARALIUS
DWN. BY	J. BOGNAR		
EST. BY	C. MANJUNATH	CHK. BY	M. CHEN
SPECS. BY	B. KARALIUS		
IN CHARGE OF	B. KARALIUS		

PARSONS BRINCKERHOFF CADD DATA
OPERATOR mariuema
PLOT DATE 01-DEC-2009 14:26
PENTABLE strfull.tbl
DESIGN FILE T:\00404\structure\Bridge\drOl_e.dgn