STATE	FEDERAL PROJECT NO.
N.J.	FS-BR-0040(168)

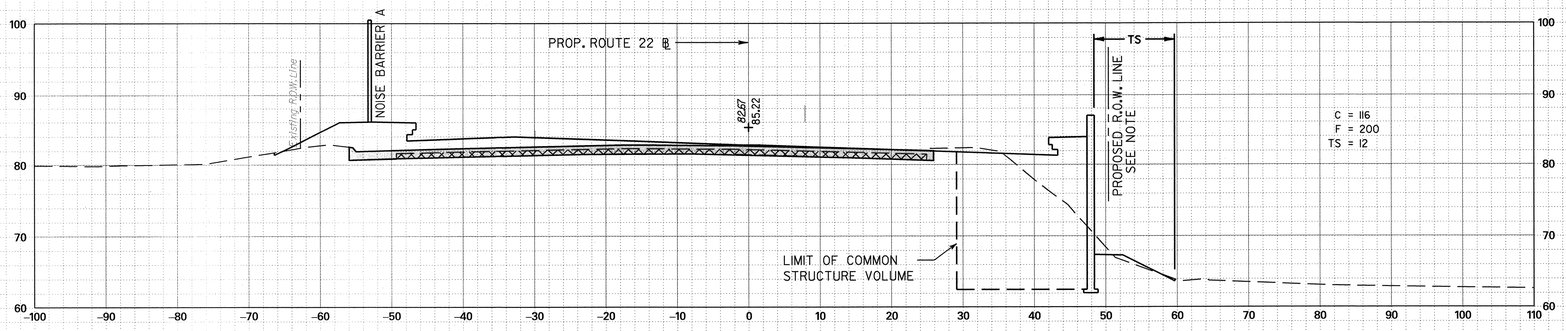

3033+50

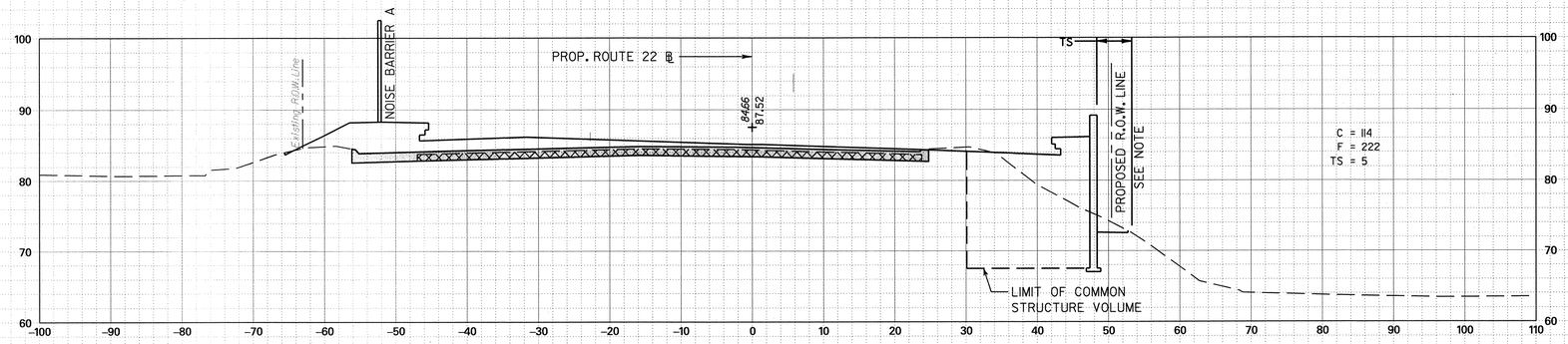

3033+00

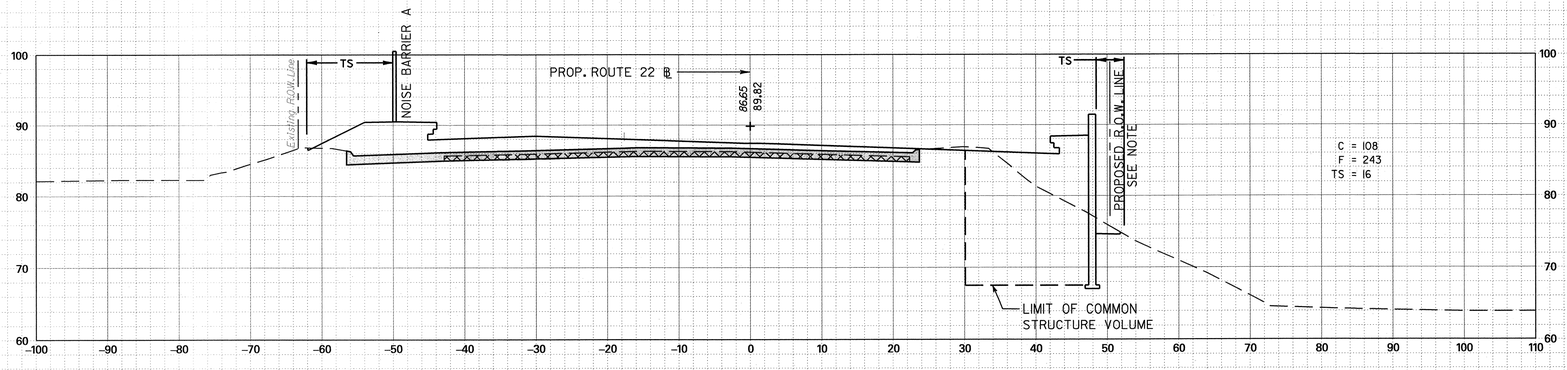

3032+50

NOTE:

SEE CONSTRUCTION PLAN FOR CONSTRUCTION EASEMENT LINES WHEN WORK IS PROPOSED OUTSIDE OF RIGHT-OF-WAY LINE.

STA. 3032+50 TO STA. 3033+50

SCALE IN FEET

10' 5' 0 10' 20'

X-10 / X-16

NEW JERSEY DEPARTMENT OF TRANSPORTATION

CROSS SECTIONS

ROUTE 22 LIBERTY AVENUE
& CONRAIL BRIDGE
CONTRACT NO. 057009080

PB AMERICAS, INC.
CERTIFICATION OF AUTHORIZATION NO. 24GA28029800

STEVEN M. ARBIZ
NEW JERSEY PROFESSIONAL ENGINEER NO. 38119

91

PARSONS BRINCKERHOFF CADD DATA

OPERATOR	runk	QUEUE	$$$$QUEUE$$$$
PLOT DATE	01-DEC-2009 06:42		
PENTABLE	pentables-ehdot.tbl		
DESIGN FILE	T:\100404\xsl0.dgn		

STATE	FEDERAL PROJECT NO.
N.J.	FS-BR-0040(168)

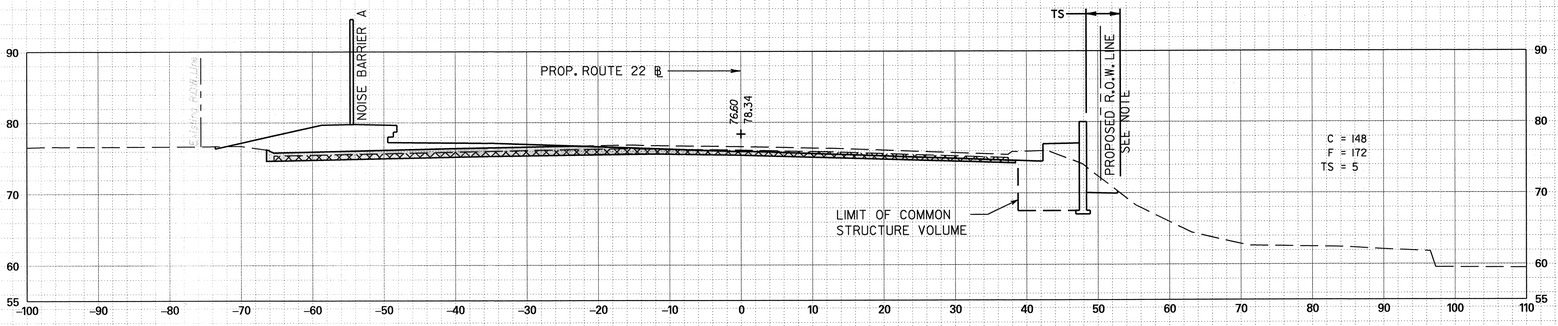

3035+00

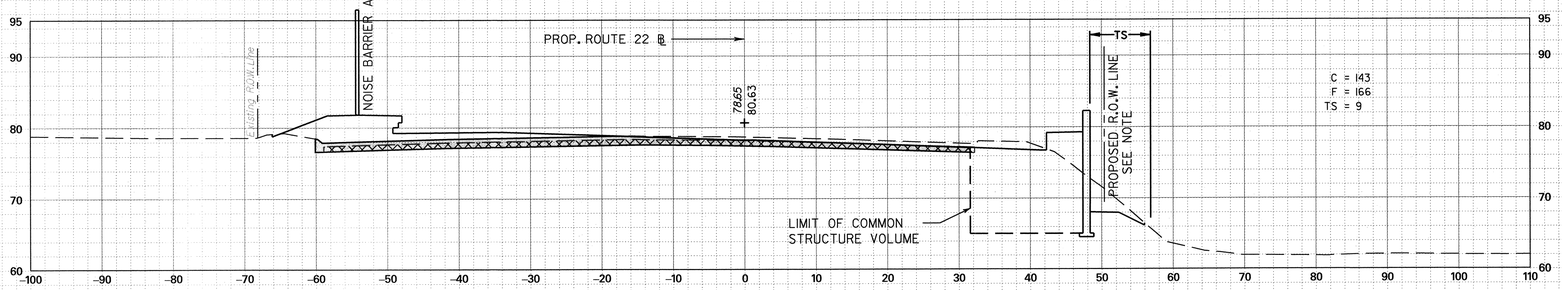

3034+50

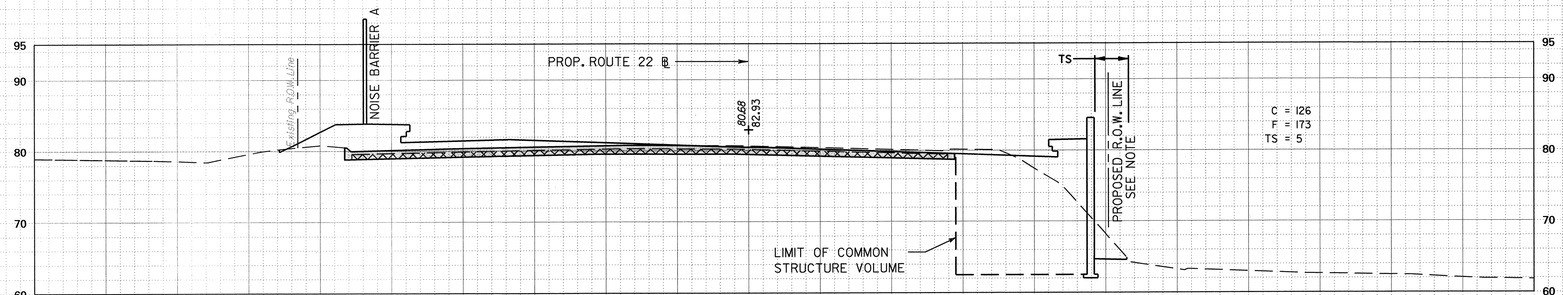

3034+00

NOTE:
SEE CONSTRUCTION PLAN FOR CONSTRUCTION EASEMENT LINES WHEN WORK IS PROPOSED OUTSIDE OF RIGHT-OF-WAY LINE.

STA. 3034+00 TO STA. 3035+00

SCALE IN FEET
10' 5' 0 10' 20'

X-11 / X-16

NEW JERSEY DEPARTMENT OF TRANSPORTATION

CROSS SECTIONS

ROUTE 22 LIBERTY AVENUE & CONRAIL BRIDGE
CONTRACT NO. 057009080

PB AMERICAS, INC.
CERTIFICATION OF AUTHORIZATION NO. 24GA28029800
STEVEN M. ARBIZ
NEW JERSEY PROFESSIONAL ENGINEER NO. 38119

PARSONS BRINCKERHOFF CADD DATA

OPERATOR	trunk QUEUE
PLOT DATE	01-DEC-2009 06:42
PENTABLE	pentable-ehdot.tbl
DESIGN FILE	T:\100404\xsll.dgn

$$$$QUEUE$$$$

STATE	FEDERAL PROJECT NO.
N.J.	FS-BR-0040(168)

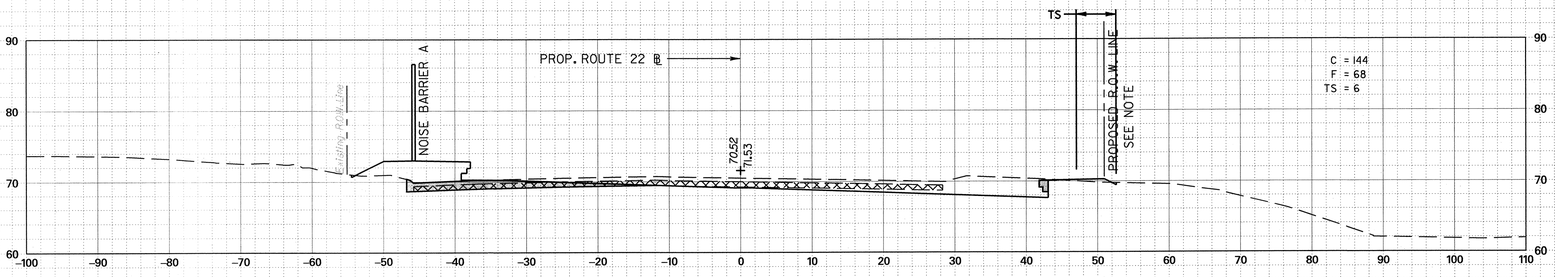

3036+50

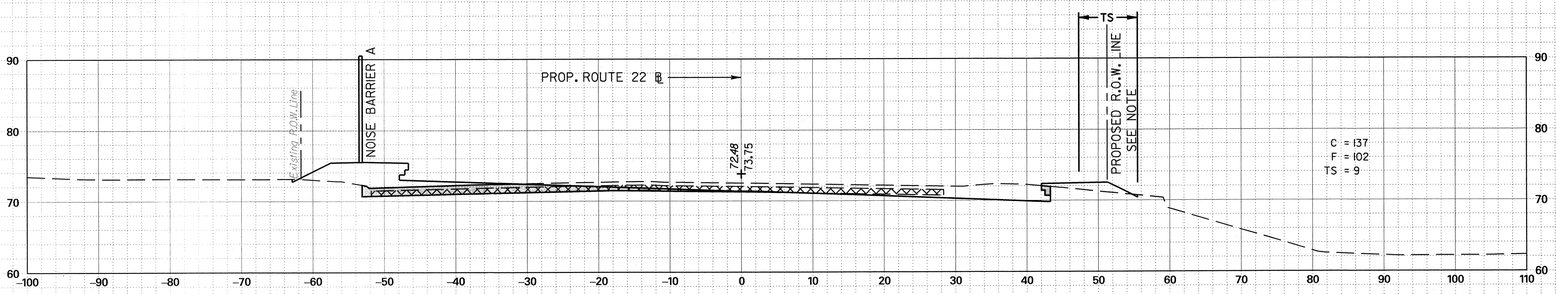

3036+00

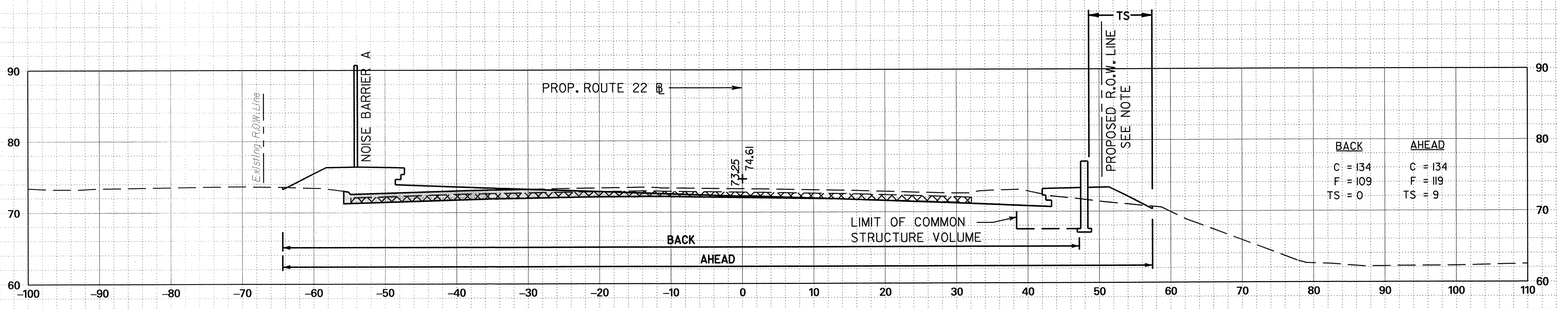

3035+81.23

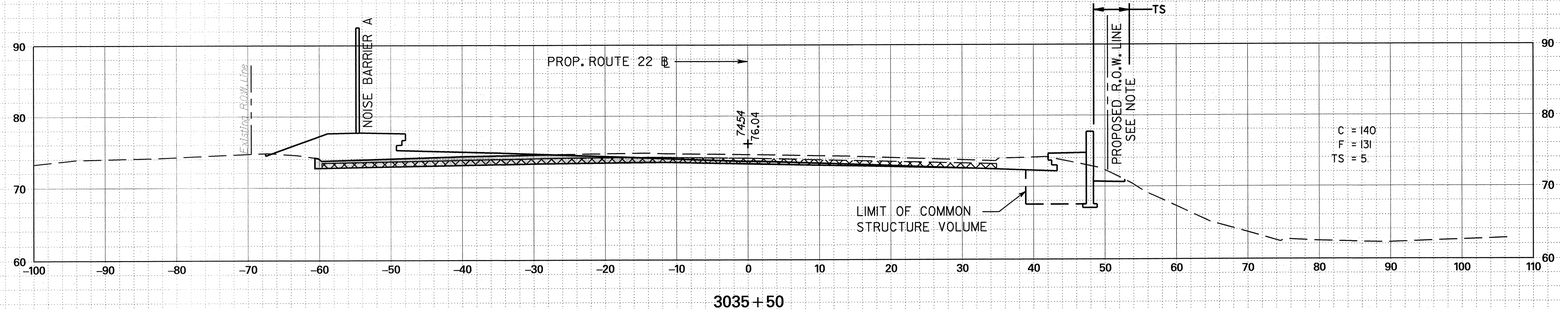

3035+50

NOTE:

SEE CONSTRUCTION PLAN FOR CONSTRUCTION EASEMENT LINES WHEN WORK IS PROPOSED OUTSIDE OF RIGHT-OF-WAY LINE.

STA. 3035+50 TO STA. 3036+50

SCALE IN FEET

10' 5' 0 10' 20'

X-12 / X-16

NEW JERSEY DEPARTMENT OF TRANSPORTATION

CROSS SECTIONS

ROUTE 22 LIBERTY AVENUE & CONRAIL BRIDGE CONTRACT NO. 057009080

PB AMERICAS, INC.

CERTIFICATION OF AUTHORIZATION NO. 24GA28029800

STEVEN M. ARBIZ

NEW JERSEY PROFESSIONAL ENGINEER NO. 38119

PARSONS BRINCKERHOFF CADD DATA

OPERATOR	rjunk
PLOT DATE	04-DEC-2009 06:42
PENTABLE	pentable-enhdot.tbl
DESIGN FILE	T:\100404\xsl2.dgn
$$$$QUEUE	$$$$QUEUE$$$$

STATE	FEDERAL PROJECT NO.
N.J.	FS-BR-0040(168)

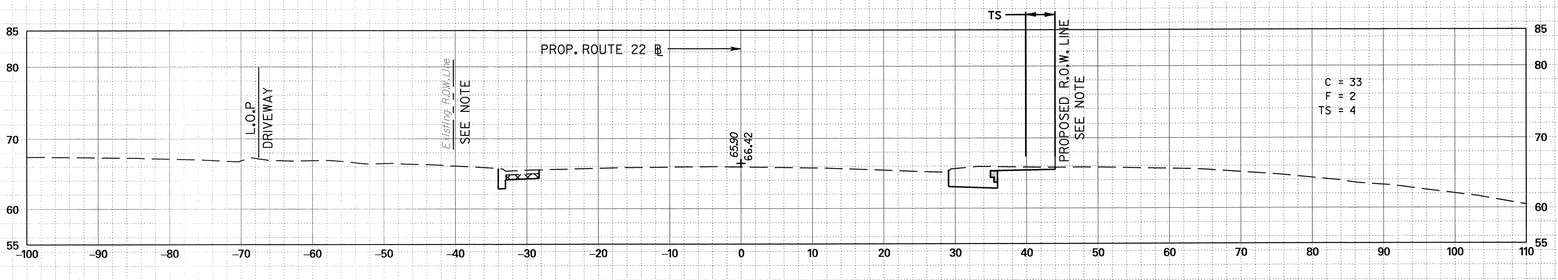

3038+00

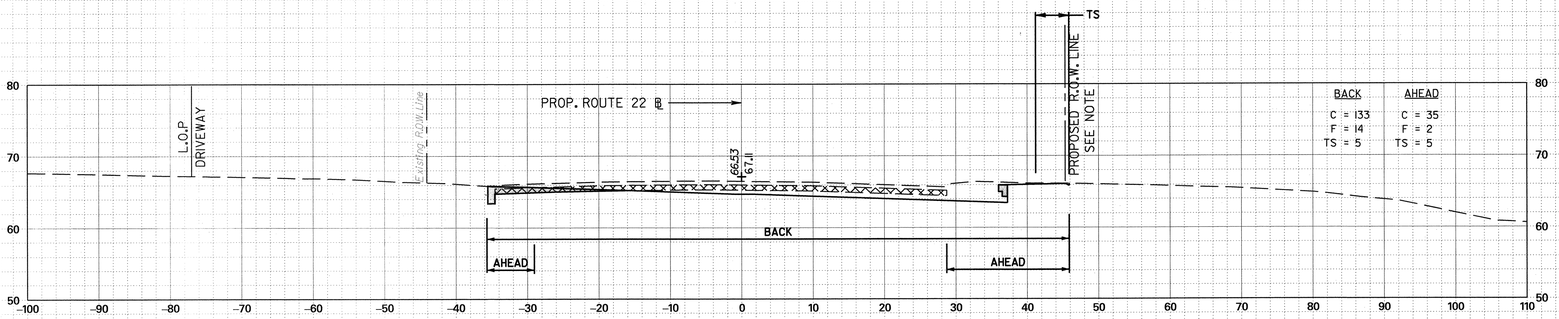

3037+75

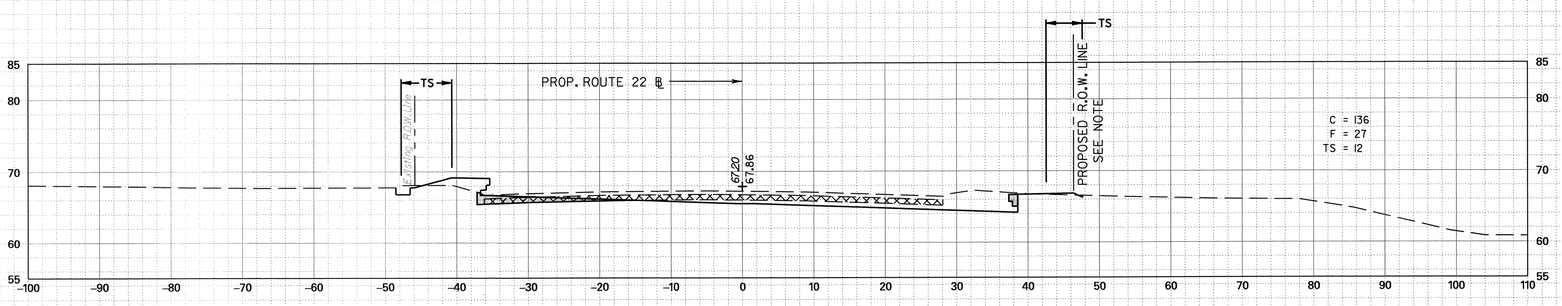

3037+50

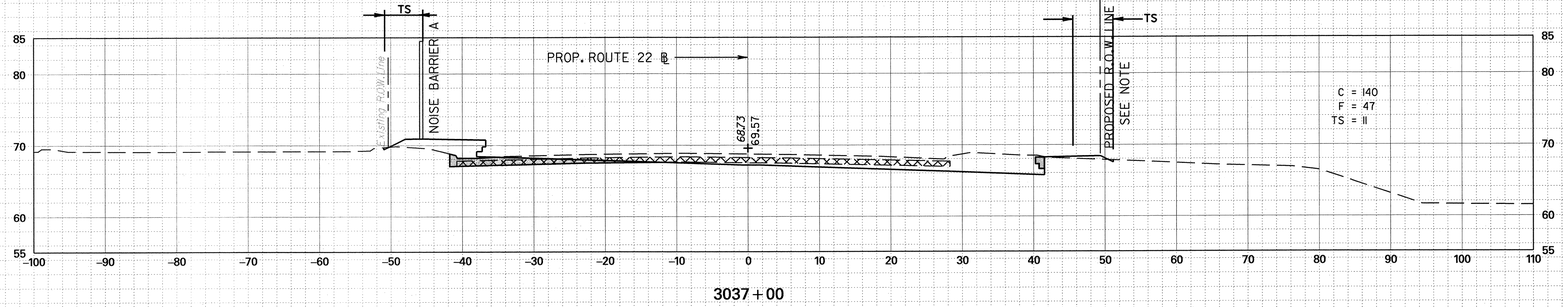

3037+00

NOTE:
SEE CONSTRUCTION PLAN FOR CONSTRUCTION EASEMENT LINES WHEN WORK IS PROPOSED OUTSIDE OF RIGHT-OF-WAY LINE.

STA. 3037+00 TO STA. 3038+00

SCALE IN FEET
10′ 5′ 0 10′ 20′

X-13 / X-16

NEW JERSEY DEPARTMENT OF TRANSPORTATION

CROSS SECTIONS

ROUTE 22 LIBERTY AVENUE
& CONRAIL BRIDGE
CONTRACT NO. 057009080

PB AMERICAS, INC.
CERTIFICATION OF AUTHORIZATION NO. 24GA28029800
STEVEN M. ARBIZ
NEW JERSEY PROFESSIONAL ENGINEER NO. 38119

94

PARSONS BRINCKERHOFF CADD DATA

OPERATOR	rlunk
PLOT DATE	01-DEC-2009 06:42
PENTABLE	pentable-ehdot.tbl
DESIGN FILE	T:\100404\xsl3.dgn
QUEUE	$$$$QUEUE$$$$

STATE	FEDERAL PROJECT NO.
N.J.	FS-BR-0040(168)

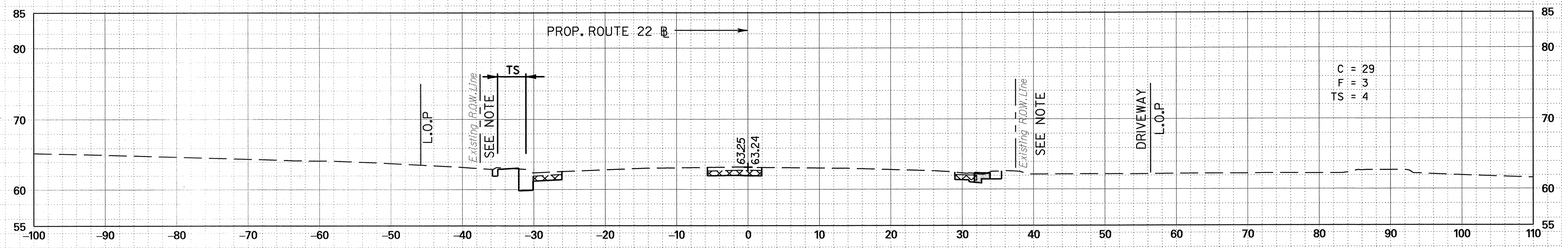

3040+00

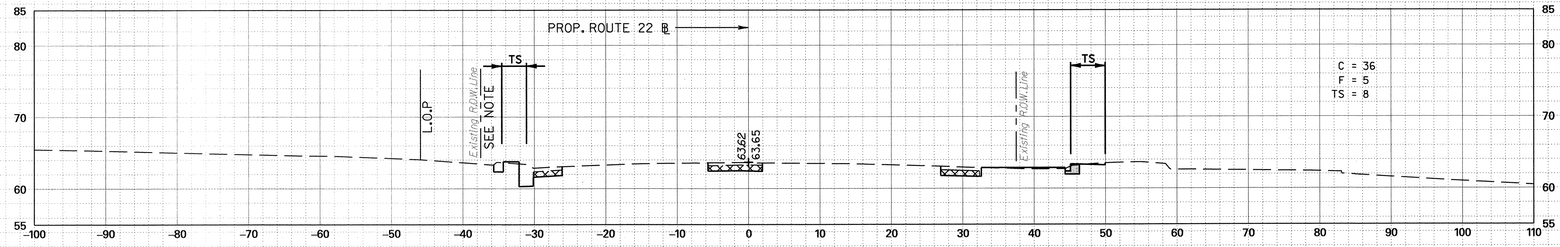

3039+50

3039+00

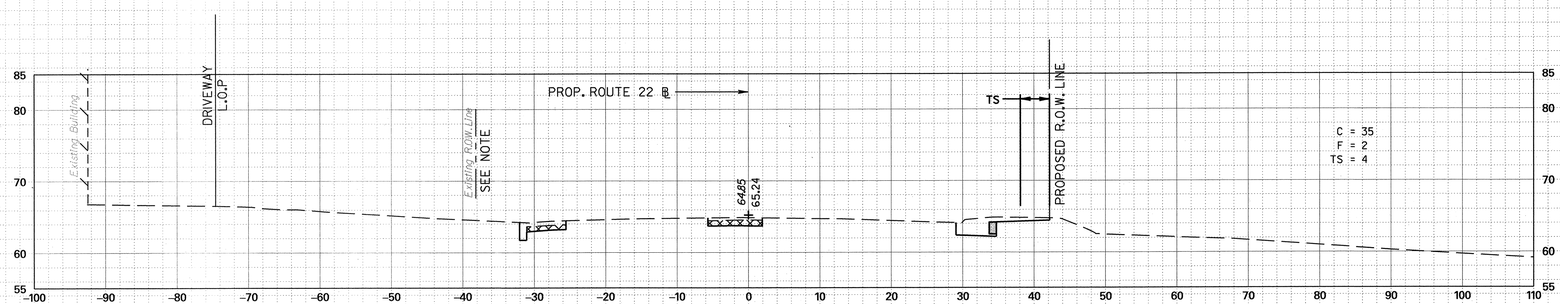

3038+50

NOTE:

SEE CONSTRUCTION PLAN FOR CONSTRUCTION EASEMENT LINES WHEN WORK IS PROPOSED OUTSIDE OF RIGHT-OF-WAY LINE.

STA. 3038+50 TO STA. 3040+00

SCALE IN FEET

10' 5' 0 10' 20'

X-14 / X-16

NEW JERSEY DEPARTMENT OF TRANSPORTATION

CROSS SECTIONS

ROUTE 22 LIBERTY AVENUE & CONRAIL BRIDGE CONTRACT NO. 057009080

PB AMERICAS, INC.

CERTIFICATION OF AUTHORIZATION NO. 24GA28029800

STEVEN M. ARBIZ

NEW JERSEY PROFESSIONAL ENGINEER NO. 38119

PARSONS BRINCKERHOFF CADD DATA

OPERATOR	runk
PLOT DATE	01-DEC-2009 06:42
PENTABLE	pentable-ehdot.tbl
DESIGN FILE	T:\00404\xsl4.dgn
QUEUE	$$$$QUEUE$$$$

STATE	FEDERAL PROJECT NO.
N.J.	FS-BR-0040(168)

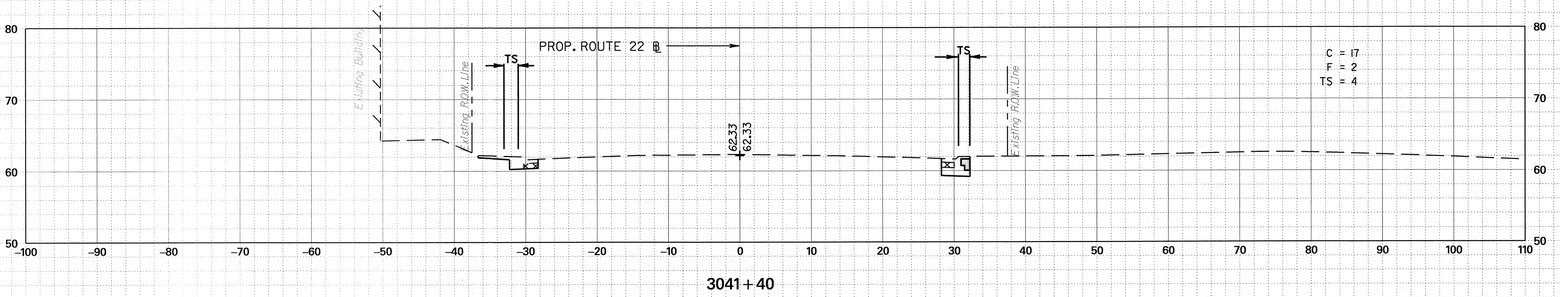

3041+40

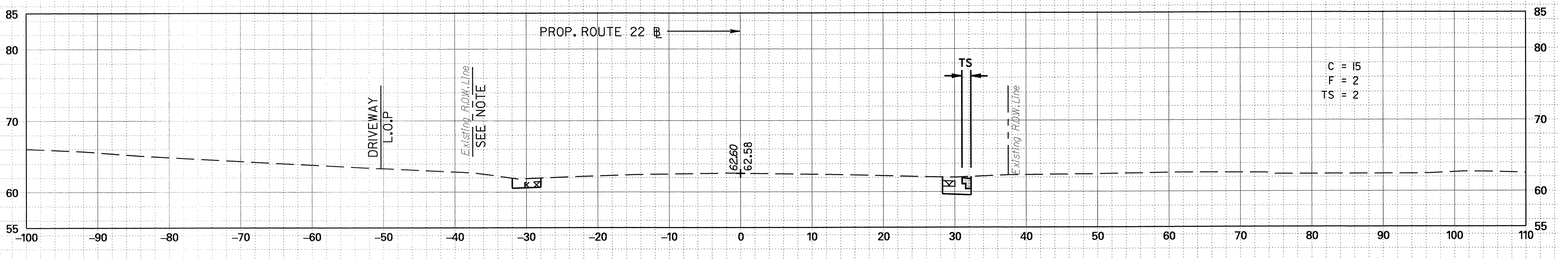

3041+00

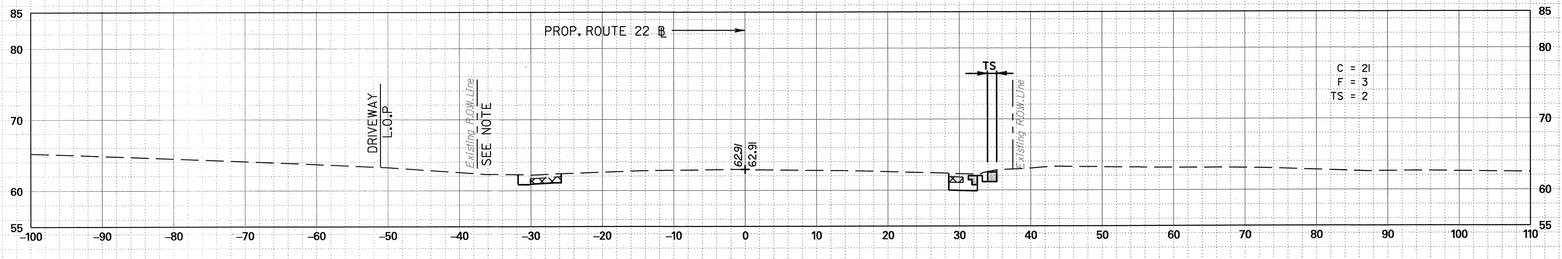

3040+50

NOTE:

SEE CONSTRUCTION PLAN FOR CONSTRUCTION EASEMENT LINES WHEN WORK IS PROPOSED OUTSIDE OF RIGHT-OF-WAY LINE.

STA. 3040+50 TO STA. 3041+40

SCALE IN FEET

10' 5' 0 10' 20'

X-15 / X-16

NEW JERSEY DEPARTMENT OF TRANSPORTATION

CROSS SECTIONS

ROUTE 22 LIBERTY AVENUE & CONRAIL BRIDGE CONTRACT NO. 057009080

PB AMERICAS, INC.
CERTIFICATION OF AUTHORIZATION NO. 24GA28029800

STEVEN M. ARBIZ
NEW JERSEY PROFESSIONAL ENGINEER NO. 38119

PARSONS BRINCKERHOFF CADD DATA

OPERATOR	rurik
PLOT DATE	01-DEC-2009 06:42
PENTABLE	pentable-ehdot.tbl
DESIGN FILE	T:\100404\xs15.dgn
QUEUE	$$$$QUEUE$$$$

STATE	FEDERAL PROJECT NO.
N.J.	FS-BR-0040(168)

EARTHWORK SUMMARY

Description			Contract Quantity
Excavation			
(A) Excavated Materials			
(1) Excavation, Unclassified available for I-14 Embankment			
Excavation from Cross Sections (except for Regulated Material and/or Acid Producing Soil)			11,816 C.Y.
Excavation from Plan sheets (except for Regulated Material and/or Acid Producing Soil)			209 C.Y.
Excavation from structures (Areas not covered in X-Sec. and denoted as RDWY ITEM on Bridge Plans)			0 C.Y.
Less	Removal of Pavement	(14,643 SY x 1.25' Average Thickness)	-6,102 C.Y.
		(782 SY x 0.50' Average Thickness)	-131 C.Y.
	Stripping in Cuts	(0,000 SY x 4" Thick)	0 C.Y.
		Total Excavation, Unclassified	5,792 C.Y.
	Removal of Pavement	(14,643 SY x 1.25' Average Thickness)	6,102 C.Y.
		(782 SY x 0.50' Average Thickness)	131 C.Y.
Less	Unsuitable Excavation Unclassified		0 C.Y.
	Unsuitable Pavement	(14,643 SY x 1.25' Average Thickness)	-6,102 C.Y.
		(782 SY x 0.50' Average Thickness)	-131 C.Y.
Total Excavation, Unclassified available for I-14 Embankment			**5,792 C.Y.**
(2) Excavation, Regulated Material available for I-14 Embankment			
Excavation, Regulated from Cross Sections			0 C.Y.
Excavation, Regulated from Plan Sheets			0 C.Y.
Excavation, Regulated of pipes, inlets & other substructures			0 C.Y.
		Total Excavation, Regulated Material	0 C.Y.
Less	Unsuitable Excavation Regulated Material, Hazardous		0 C.Y.
	Unsuitable Excavation Regulated Material		0 C.Y.
Total Excavation, Regulated Material available for I-14 Embankment			**0 C.Y.**
Disposal of Regulated Material		(0.0 x 1.755 TON/CY)	0 TON
(3) Excavation, Acid Producing Soil available for I-14 Embankment			
Excavation, Acid Producing Soil from Cross Sections			0 C.Y.
Excavation, Acid Producing Soil from Plan Sheets			0 C.Y.
Excavation, Acid Producing Soil of pipes, inlets & other substructures			0 C.Y.
		Total Excavation, Regulated Material	0 C.Y.
Less	Unsuitable Excavation Acid Producing Soil		0 C.Y.
Total Excavation, Acid Producing Soil available for I-14 Embankment			**0 C.Y.**
Disposal of Acid Producing Soil		(0.0 x 1.755 TON/CY)	0 TON
Total Excavated Materials Available for I-14 Embankment (Total of 1+2+3) ((5,792 C.Y. + 0 C.Y.+ 0 C.Y.) x 0.90 shrinkage)			**5,213 C.Y.**
(B) I-14 Embankment Quantity Required			
Embankment from Cross Sections			9,684 C.Y.
Embankment from Plan Sheets			0 C.Y.
I-9 Soil Aggregate (Roadway Item not covered on Cross Sections)			1,750 C.Y.
Less	I-9 Soil Aggregate (Roadway Item not covered on Cross Sections)		-1,750 C.Y.
	Stripping in Fill	(0 SY x 4" Thick)	0 C.Y.
		Total	**9,684 C.Y.**
Excavated Materials Excess (Suitable for I-14 Embankment)			**0 C.Y.**
Excavated Materials to be Borrowed (Suitable for I-14 Embankment)			**4,471 C.Y.**
Topsoiling			
(A) Topsoil Available			
Stripping in Cut		(0,000 SY x 4" Thick)	0 C.Y.
Stipping in Fill		(0,000 SY x 4" Thick)	0 C.Y.
		Total Stripping available for Topsoil	**0 C.Y.**
(B) Topsoil Required			
Topsoiling, 4" Thick from Cross Sections			2,545 S.Y.
Topsoiling, 4" Thick from Plan Sheets			874 S.Y.
		Total Topsoiling 4" Thick required in SY	3,419 S.Y.
		Total Topsoiling 4" Thick required in CY (3,419 SY x 4" Thick)	**380 C.Y.**
Excess Topsoil			**0 C.Y.**
Borrow Topsoil			**380 C.Y.**

SCALE IN FEET
10' 5' 0 10' 20'

X-16 / X-16

NEW JERSEY DEPARTMENT OF TRANSPORTATION

CROSS SECTIONS

ROUTE 22 LIBERTY AVENUE
& CONRAIL BRIDGE
CONTRACT NO. 057009080

PB AMERICAS, INC.
CERTIFICATION OF AUTHORIZATION NO. 24GA28029800

STEVEN M. ARBIZ
NEW JERSEY PROFESSIONAL ENGINEER NO. 38119

PARSONS BRINCKERHOFF CADD DATA

OPERATOR	runk
PLOT DATE	01-DEC-2009 06:42
PENTABLE	pentables-ehdot.tbl
DESIGN FILE	T:\0040A\xsl6.dgn
QUEUE	$$$$QUEUE$$$$

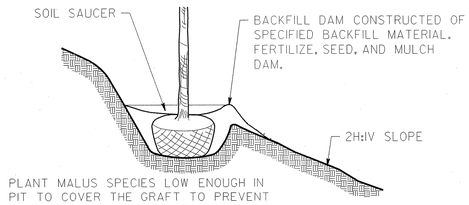

TREE PLANTING - 2H:IV SLOPE

CD-813-1.1

IMMEDIATELY PRIOR TO PLANTING, MAKE 3 VERTICAL CUTS EQUIDISTANT AND ½" DEEP INTO ROOT MASS.

CONTAINERIZED PLANTING DETAIL

CD-813-1.3

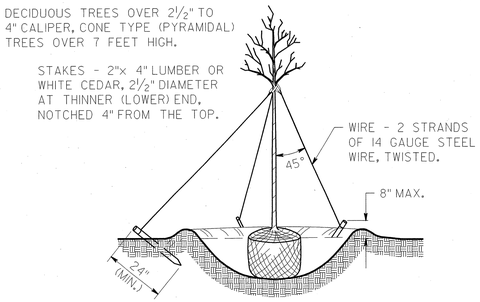

TREES REQUIRING THREE GUYS & STAKES

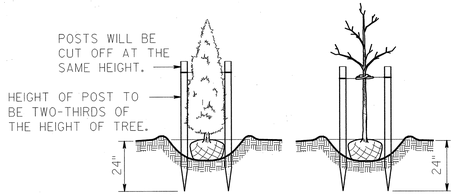

TREES REQUIRING TWO STAKES

DECIDUOUS TREES OVER 1½" TO 2½" CALIPER, INCLUSIVE. ALL SALIX REGARDLESS OF HEIGHT, CALIPER, BARE ROOT OR BALLED AND BURLAPPED. CONE TYPE (PYRAMIDAL) TREES 5 FEET TO 7 FEET HIGH AND COLUMNAR EVERGREEN TREES 7 FEET TO 9 FEET HIGH, INCLUSIVE.

STAKING DETAILS

CD-813-1.5

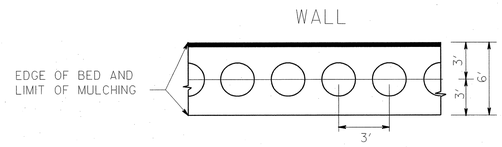

ARONIA HEDGE PLANTING DETAILS

PLANTING
N.T.S.

CD-813-2.3

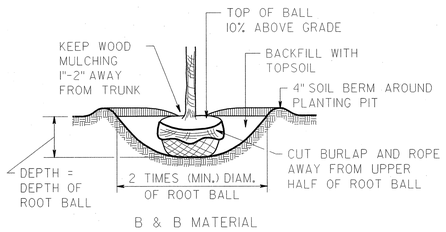

B & B MATERIAL

TREE & SHRUB PLANTING DETAIL

CD-813-1.2

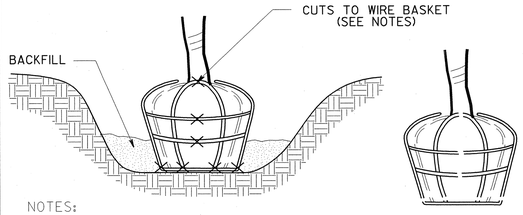

NOTES:

1. CUT OUT BOTTOM LOOPS PRIOR TO SETTING PLANT IN PLANTING PIT.
2. SET PLANT AND BACKFILL HALFWAY UP THE BALL. TAMP AND WATER BACKFILL.
3. CUT REMAINING HORIZONTAL BAND DOWN ONE SIDE.
4. REMOVE REMAINDER OF WIRE BASKET.
5. COMPLETE BACKFILLING AND PROVIDE INITIAL WATERING.

WIRE BASKET REMOVAL

CD-813-1.4

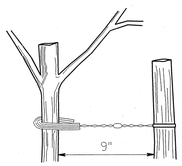

ANCHOR TREE TO POST(S) USING 14 GAUGE STEEL WIRE AND ⅜" MIN INSIDE DIAMETER CORDED RUBBER.

DETAIL OF POST AND GUY WIRE

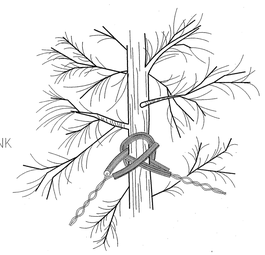

GUY WIRES SHOULD BE PLACED AT LEAST HALF WAY UP THE TRUNK.

DETAIL OF GUY WIRES AROUND TRUNK

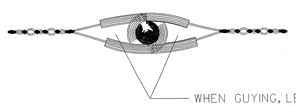

FASTENING DETAIL

CD-813-1.7

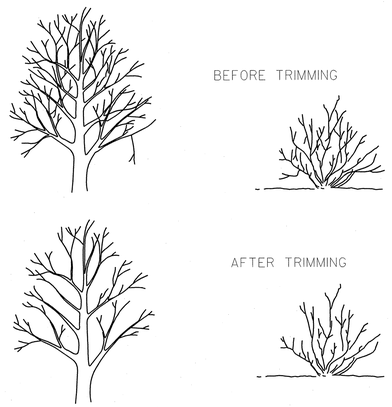

DAMAGED BRANCHES SHALL BE TRIMMED OFF BELOW THE POINT OF INJURY. THE CENTRAL TRUNK OR "LEADER" SHOULD BE LEFT INTACT. BROKEN ROOTS SHALL BE CUT OFF ABOVE THE BREAK AND BRUISED ENDS CUT OFF CLEANLY.

WHEN PLANTING A YOUNG SHRUB, PRUNE JUST ABOVE A BUD AND RETAIN THE NATURAL SHAPE OF THE SHRUB.

PRUNING AT TIME OF PLANTING

CD-813-1.8

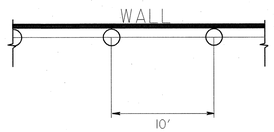

PARTHENOCISSUS PLANTING DETAILS

PLANTING
N.T.S.

CD-813-2.3

DTL-1 / DTL-10

NEW JERSEY DEPARTMENT OF TRANSPORTATION

CONSTRUCTION DETAILS

ROUTE 22 LIBERTY AVENUE
& CONRAIL BRIDGE
CONTRACT NO. 057009080

PARSONS BRINCKERHOFF CADD DATA

OPERATOR	runk
PLOT DATE	01-DEC-2009 06:42
PENTABLE	etx.tbl
DESIGN FILE	T:\00040\cd01.dgn
QUEUE	\\Prjplot1\Oce.Pl

STATE	FEDERAL PROJECT NO.
N.J.	FS-BR-0040(168)

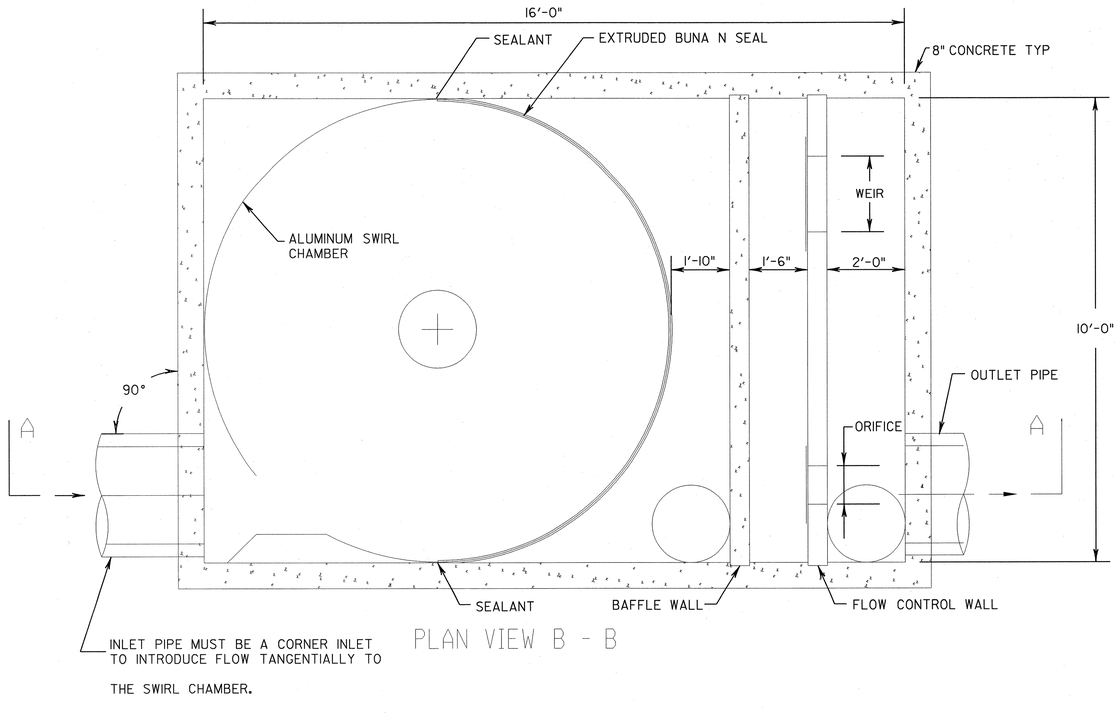

PLAN VIEW B - B

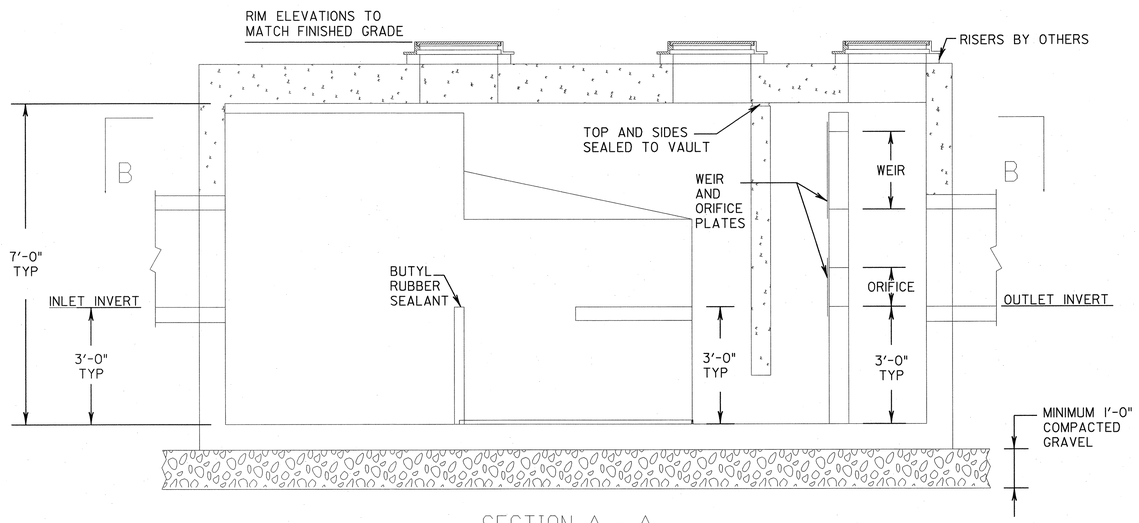

SECTION A - A

MANUFACTURED TREATMENT DEVICE (M.T.D.)

N.T.S.

NOTES:

1. M.T.D. TO BE 'VORTECHS' MODEL 11000, OR APPROVED EQUAL, AND SHALL MEET THE FOLLOWING REQUIREMENTS:
   - A. THE MTDs ARE TO BE DESIGNED IN ACCORDANCE WITH AASHTO AND NJDOT REQUIREMENTS FOR PRECAST CONCRETE STRUCTURES.
   - B. THE MTDs ARE TO BE DESIGNED FOR A LIVE LOAD CONFORMING TO AASHTO HS20+25% OR AN ALTERNATE MILITARY LOADING OF TWO AXLES 4 FEET APART WITH EACH AXLE WEIGHING 24,000 POUNDS, WHICHEVER GOVERNS
   - C. ONE FOOT OF CRUSHED STONE IS TO BE PROVIDED UNDER THE BOTTOM OF THE BASE SLAB. THE STONE IS TO EXTEND 1 FOOT ON EACH SIDE OF THE MTD.
   - D. CONCRETE IS TO BE CLASS P, 5000 PSI.
   - E. REINFORCEMENT COVER IS TO 2 INCHES EXCEPT FOR THE BOTTOM OF THE TOP SLAB WHICH SHALL BE A MINUMUM OF 1 INCH.
   - F. THE TOP MAT OF REINFORCEMENT IN THE TOP SLAB SHALL BE EPOXY COATED IF THE DEPTH OF FILL IS LESS THAN 2 FEET.
   - G. INFORMATION ON LIFTING INSERTS IS TO BE PROVIDED ON THE WORKING DRAWINGS, INCLUDING LIFTING LOADS. LIFTING INSERTS ARE TO BE GALVANIZED. HOLES ARE TO BE GROUTED AFTER INSTALLATION.
   - H. AN EPOXY WATERPROOFING SEAL COAT IS TO BE APPLIED TO THE TOP SURFACE OF THE TOP SLAB.
2. SHOP DRAWINGS AND CALCULATIONS TO BE SUBMITTED FOR REVIEW AND APPROVAL PRIOR TO FABRICATION OR INSTALLATION.

DESIGN DATA:	MTD #1	MTD #2
DRAINAGE AREA = ACRES	1.92 ACRES	2.02 ACRES
RUNOFF COEFFICIENT =	1.0	1.0
TIME OF CONCENTRATION = MIN.	11.8 MIN.	12.14 MIN.
INTENSITY (10 YR) = IN/HR.	5.468 IN/HR.	5.429 IN/HR.
DISCHARGE (10 YR) = CFS	10.48 CFS	10.96 CFS

ALL DETAILS ARE DRAWN N.T.S.

DTL-2
DTL-10

NEW JERSEY DEPARTMENT OF TRANSPORTATION

CONSTRUCTION DETAILS

ROUTE 22 LIBERTY AVENUE
& CONRAIL BRIDGE
CONTRACT NO. 057009080

PB AMERICAS, INC.
CERTIFICATION OF AUTHORIZATION NO. 24GA28029800

STEVEN M. ARBIZ
NEW JERSEY PROFESSIONAL ENGINEER NO. 38119

99

PARSONS BRINCKERHOFF CADD DATA

OPERATOR	rlunk
PLOT DATE	01-DEC-2009 06:42
PENTABLE	etx.tbl
DESIGN FILE	T:\00404\cd02.dgn
QUEUE	\\Prtplot\Oce_Pl

STATE	FEDERAL PROJECT NO.
N.J.	FS-BR-0040(168)

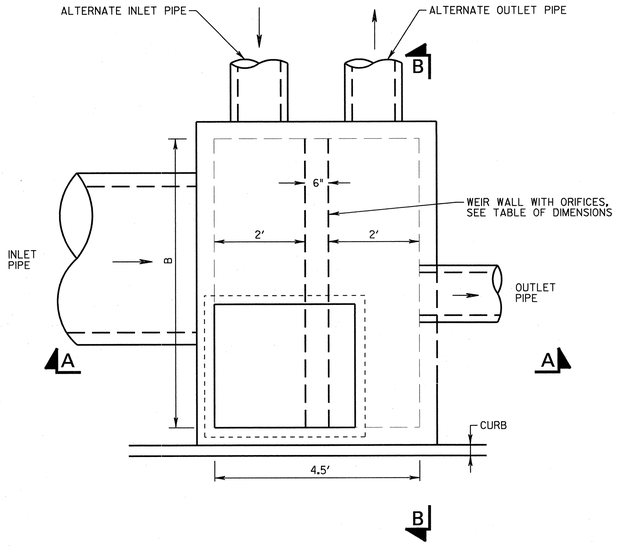

PLAN

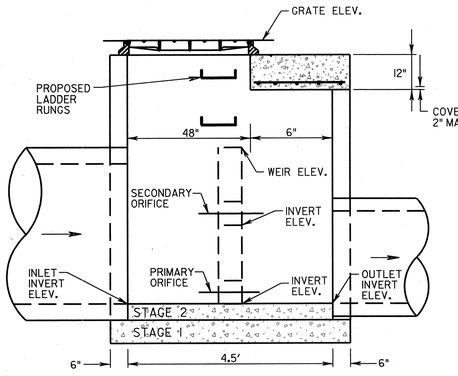

FOUNDATION AND INVERT TO BE CONSTRUCTED IN 2 STAGES. TOP SURFACE OF STAGE I TO BE LEFT ROUGH

SECTION A–A

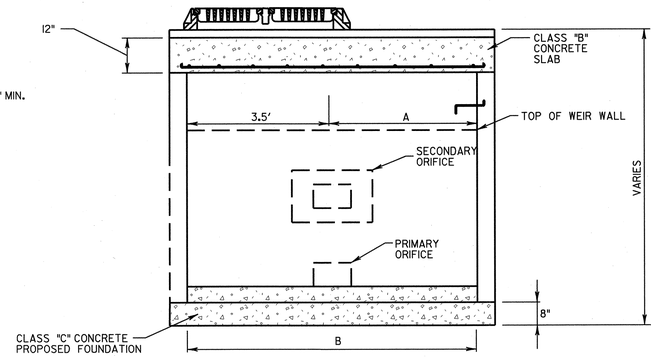

SECTION B–B

TYPE	A	B
E3W	3'	6.5'
E4W	4'	7.5'
E5W	9'	12.5'

INLETS, TYPES E3W – E5W

N.T.S.

ID	TYPE	LOCATION	ORIFICE #1		ORIFICE #2		WEIR	INLET PIPE		OUTLET PIPE		GRATE
			INVERT	SIZE	INVERT	SIZE	ELEV.	SIZE	INVERT	SIZE	INVERT	ELEV.
A1	E3W	3021+26.3, LT	76.58	3"X3"	80.03	6"X18"	80.94	48"	76.58	18"	76.50	83.36
A2A	E3W	3020+08.7, LT	71.52	3"X3"	74.37	6"XII"	76.65	54"	71.52	18"	71.32	78.31
A2B	E3W	3018+37.3, LT	63.25	6"XI5"	-	-	68.38	54"	63.25	18"	61.72	70.23
A3	E4W	3020+36.2, RT	71.03	3"X3"	74.23	6"XI2"	75.68	54"	71.03	18"	70.90	77.82
A4	E4W	3018+36.5, RT	62.56	3"X3"	65.51	6"XI0"	68.07	54"	62.56	18"	62.56	69.49
C1	E5W	3032+99.8, RT	79.01	6"X6"	81.41	9"XI0"	83.02	48"	79.01	15"	78.81	85.95
C2	E5W	3034+99.8, RT	69.83	6"X6"	72.83	12"XI2"	74.54	48"	69.83	15"	69.63	76.72
C3	E4W	3036+99.0, RT	61.21	6"X9"	64.21	12"XI4"	66.85	54"	61.21	18"	60.86	68.05

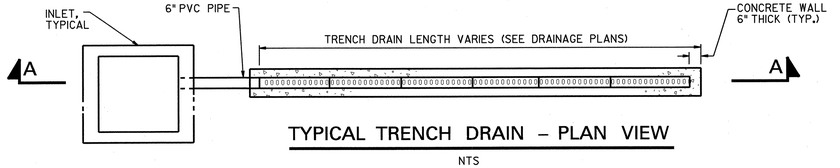

TYPICAL TRENCH DRAIN – PLAN VIEW

NTS

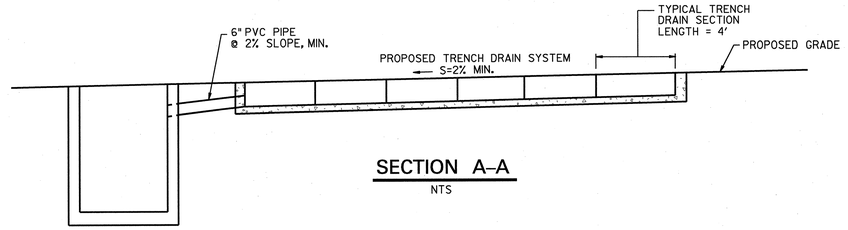

SECTION A–A

NTS

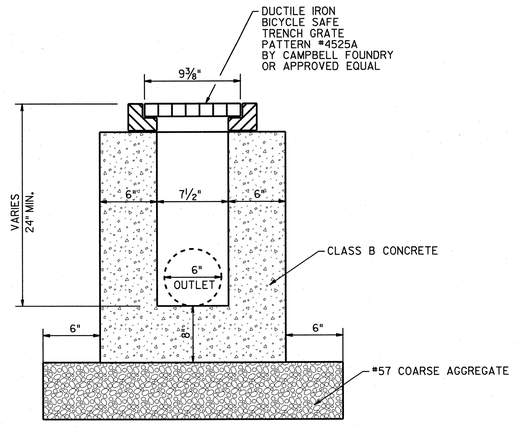

TRENCH DRAIN DETAIL

NTS

NOTE:

REINFORCEMENT IN THE WALLS AND BOTTOM SLAB SHALL BE DESIGNED BY THE CONTRACTOR AND SUBMITTED TO THE ENGINEER FOR APPROVAL.

NOTES:

1. FOR GENERAL NOTES SEE CONSTRUCTION DETAIL CD-602-1. SEE CONSTRUCTION DETAILS CD-602-2, CD-602-3. FOR C.I. FRAME AND GRATE DETAILS, SEE CD-602-1, CD-602-2 AND CD-602-4. THE CONTRACTOR SHALL FIELD VERIFY ALL DIMENSIONS PRIOR TO CONSTRUCTION OR FABRICATION OF INLETS.
2. REINFORCEMENT IN THE WALLS AND TOP SLAB SHALL BE DESIGNED BY THE CONTRACTOR AND SUBMITTED TO THE ENGINEER FOR APPROVAL.
3. REFER TO PLANS FOR CONFIGURATION AND LOCATION OF INLET AND OUTLET PIPES.

INLETS, TYPE E3W–E5W
TYPICAL TRENCH DRAIN

DTL-3 / DTL-10

NEW JERSEY DEPARTMENT OF TRANSPORTATION

CONSTRUCTION DETAILS

ROUTE 22 LIBERTY AVENUE
& CONRAIL BRIDGE
CONTRACT NO. 057009080

PB AMERICAS, INC.
CERTIFICATION OF AUTHORIZATION NO. 24GA28029800

STEVEN M. ARBIZ
NEW JERSEY PROFESSIONAL ENGINEER NO. 38119

100

PARSONS BRINCKERHOFF CADD DATA

OPERATOR	trunk QUEUE
PLOT DATE	01-DEC-2009 06:42
PENTABLE	etnx.tbl
DESIGN FILE	T:\100040\cd03.dgn
	\\Prjdata11\Oce_P1

STATE	FEDERAL PROJECT NO.
N.J.	FS-BR-0040(168)

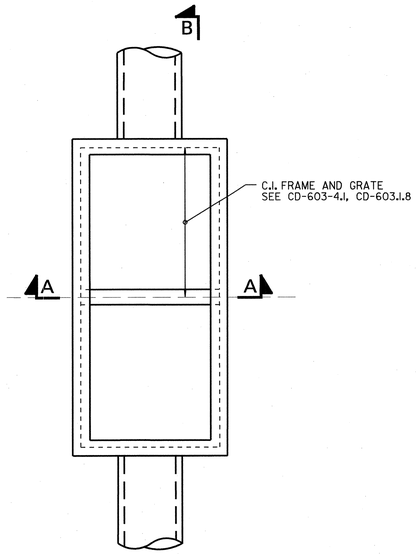

PLAN

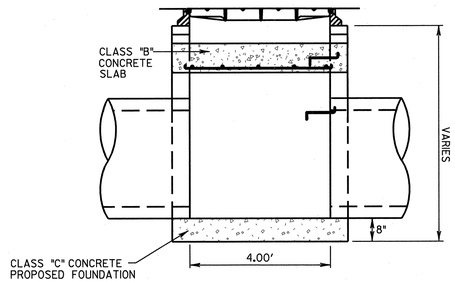

SECTION B-B

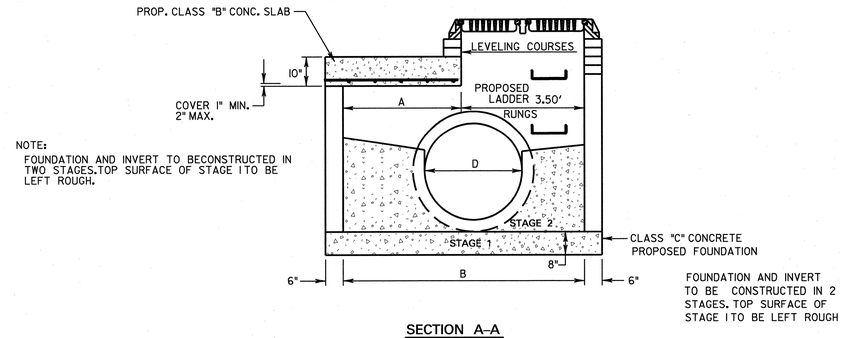

NOTE:
FOUNDATION AND INVERT TO BECONSTRUCTED IN TWO STAGES.TOP SURFACE OF STAGE 1 TO BE LEFT ROUGH.

SECTION A-A

TYPE	A	B
E3	3.0'	6.5'
E4	4.0'	7.5'
E5	9.0'	12.5'

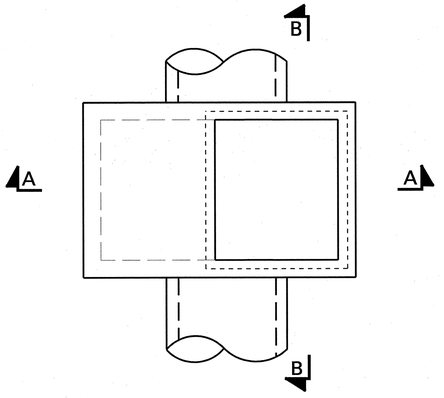

PLAN

INLETS, TYPES E3-E4-E5
N.T.S.

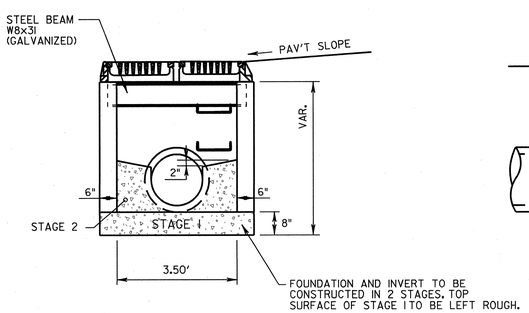

SECTION A-A
N.T.S.

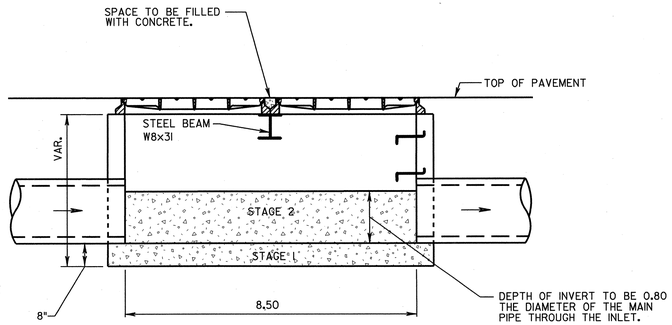

SECTION B-B
N.T.S.

INLETS, TYPE E DOUBLE
N.T.S.

NOTES:

1. FOR GENERAL NOTES SEE CONSTRUCTION DETAIL CD-602-1. SEE CONSTRUCTION DETAILS CD-602-2, CD-602-3. FOR C.I. FRAME AND GRATE DETAILS, SEE CD-602-1, CD-602-2 AND CD-602-4. THE CONTRACTOR SHALL FIELD VERIFY ALL DIMENSIONS PRIOR TO CONSTRUCTION OR FABRICATION OF INLETS.
2. REINFORCEMENT IN THE WALLS AND TOP SLAB SHALL BE DESIGNED BY THE CONTRACTOR AND SUBMITTED TO THE ENGINEER FOR APPROVAL.

INLETS, TYPE E3, E4,E5
INLETS, TYPE E DOUBLE

DTL-4
DTL-10

NEW JERSEY DEPARTMENT OF TRANSPORTATION

CONSTRUCTION DETAILS

ROUTE 22 LIBERTY AVENUE
& CONRAIL BRIDGE
CONTRACT NO. 057009080

PB AMERICAS, INC.
CERTIFICATION OF AUTHORIZATION NO. 24GA28029800
STEVEN M. ARBIZ
NEW JERSEY PROFESSIONAL ENGINEER NO. 38119

ALL DETAILS ARE DRAWN N.T.S.

101

PARSONS BRINCKERHOFF CADD DATA

OPERATOR	runk	QUEUE	\\Priplot1\Oce_PI
PLOT DATE	01-DEC-2009 06:42		
PENTABLE	ehx.tbl		
DESIGN FILE	T:\100404\cd04.dgn		

STATE	FEDERAL PROJECT NO.
N.J.	FS-BR-0040(168)

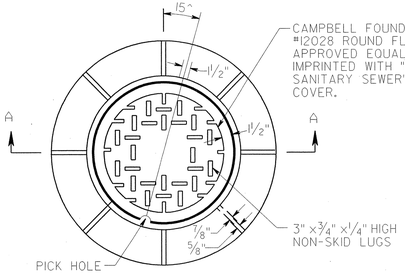

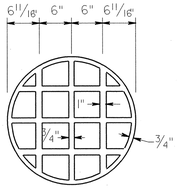

UNDERSIDE OF COVER

MINIMUM WEIGHTS
WEIGHT OF FRAME = 265#
WEIGHT OF COVER = 175#

NOTE:
SEE GENERAL NOTE 10, CD-603-1.6

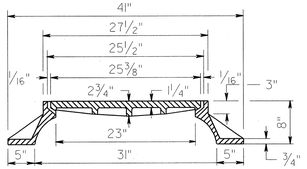

SECTION A-A

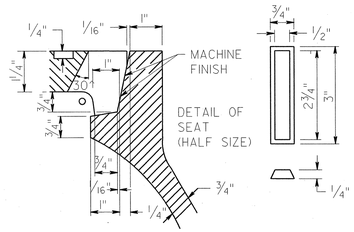

STANDARD MANHOLE FRAME AND COVER

GENERAL NOTES

1. MANHOLES MAY BE CONSTRUCTED OF BRICK, CONCRETE, CONCRETE BLOCK, OR PRECAST CONCRETE.
2. WHEN THE DEPTH OF A MANHOLE EXCEEDS 10 FEET AS MEASURED FROM TOP OF COVER TO INVERT, THE WALLS OF BRICK, CONCRETE, OR CONCRETE BLOCK BELOW A DEPTH OF 8 FEET SHALL BE 12 INCHES THICK. THE OVERALL HORIZONTAL DIMENSIONS SHALL BE INCREASED 12 INCHES AND THE DEPTH OF THE FOUNDATION INCREASED TO 12 INCHES. WHEN ROCK IS ENCOUNTERED THE HORIZONTAL DIMENSION AND DEPTH OF THE FOUNDATION SHALL NOT BE INCREASED. THE THICKNESS OF PRECAST CONCRETE MANHOLE WALLS DOES NOT HAVE TO BE INCREASED IF THE DEPTH OF THE MANHOLE EXCEEDS 10 FEET.
3. CASTINGS OF PRECAST MANHOLES SHALL BE ADJUSTED TO GRADE WITH COURSES OF BRICK OR CONCRETE BLOCK, AS REQUIRED, 12 INCHES MAXIMUM.
4. AS AN ALTERNATE TO THE STANDARD MANHOLE FRAME AND COVER, A 39 INCH DIAMETER FRAME WITH 4 INCH FLANGE MAY BE FURNISHED WITH ALL OTHER DIMENSIONS AND WEIGHTS REMAINING THE SAME.
5. IN A BRICK, CONCRETE, OR CONCRETE BLOCK MANHOLE, THE INVERT SHALL BE CONSTRUCTED IN TWO STAGES.
6. AS AN ALTERNATIVE, COPOLMYER POLYPROPYLENE PLASTIC LADDER RUNGS MY BE FURNISHED IN PRECAST MANHOLES AND INLETS.
7. STANDARD MANHOLE FRAME AND COVER SHOWN IN CD-603-8.1 SHALL BE DESIGNED FOR THE TRUCK LIVE LOAD (HS-25 TRUCK WHEEL LOAD) AS ADOPTED FOR NJDOT BRIDGES. IF THE AASHTO LRFD BRIDGE DESIGN SPECIFICATIONS ARE USED THEN THE DESIGN SHALL CONFORM TO THE AASHTO LRFD HL-93 VEHICULAR LIVE LOADING OR THE NJDOT PERMIT VEHICLE, WHICHEVER GOVERNS.

CD-603-8.3

NOTES:

1. FOUNDATION AND INVERT TO BE CONSTRUCTED IN TWO STAGES.
2. MANHOLE SHALL BE WATER TIGHT AND HAVE 2½" MIN. THICKNESS MORTAR COATED EXTERIOR AND INTERIOR SURFACE. A BITUMASTIC COATING SHALL BE APPLIED TO THE EXTERIOR.
3. PROVIDE A RUBBER BOOT PER SECTION B-B ON SHEET CD-X.

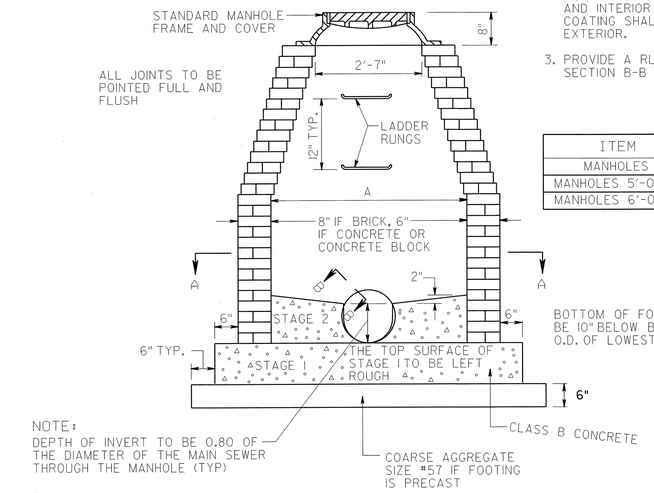

ITEM	DIMENSION A
MANHOLES	4'-0"
MANHOLES 5'-0" DIA.	5'-0"
MANHOLES 6'-0" DIA.	6'-0"

NOTE:
DEPTH OF INVERT TO BE 0.80 OF THE DIAMETER OF THE MAIN SEWER THROUGH THE MANHOLE (TYP)

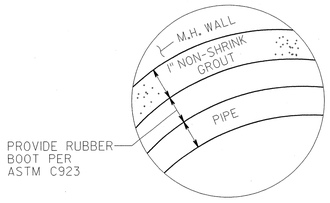

SECTION B-B

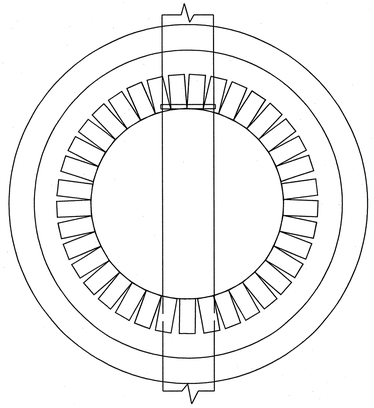

SECTION A-A

MANHOLES, MANHOLES 5 FOOT DIAMETER, MANHOLES 6 FOOT DIAMETER

MANHOLES
N.T.S.

DTL-5
DTL-10

UTILITY
KS ENGINEERS, P.C.

JACK PERLMUTTER
N.J. P.E. LIC. NO. 37648

NEW JERSEY DEPARTMENT OF TRANSPORTATION

CONSTRUCTION DETAILS

ROUTE 22 LIBERTY AVENUE
& CONRAIL BRIDGE
CONTRACT NO. 057009080

PB AMERICAS, INC.
CERTIFICATION OF AUTHORIZATION NO. 24GA28029800

STEVEN M. ARBIZ
NEW JERSEY PROFESSIONAL ENGINEER NO. 38119

102

PARSONS BRINCKERHOFF CADD DATA

OPERATOR	rurik
QUEUE	\\Prjplot1\Oce_PI
PLOT DATE	01-DEC-2009 06:42
PENTABLE	ehx.tbl
DESIGN FILE	T:\00404\cd05.dgn

STATE	FEDERAL PROJECT NO.
N.J.	FS-BR-0040(168)

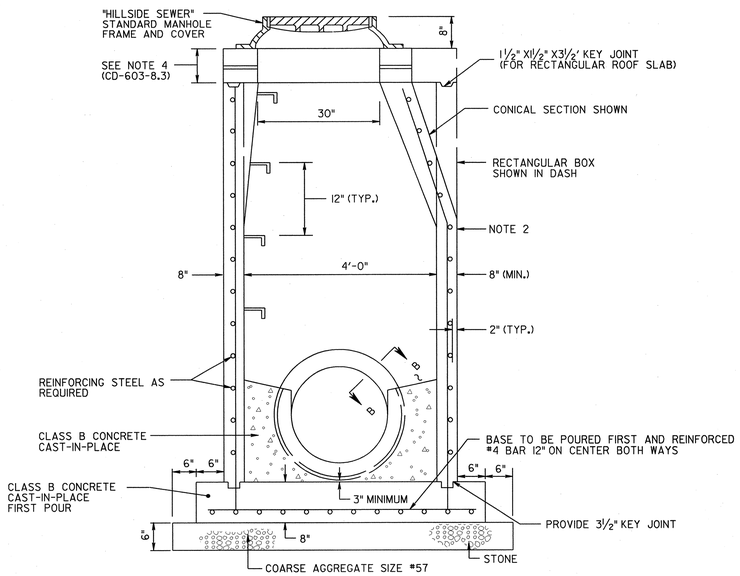

NOTES:

1. CAST-IN-PLACE CONCRETE MANHOLE CAN BE CIRCULAR OR RECTANGULAR AND SHALL BE DESIGNED FOR HS-25 LOADING
2. MANHOLE DESIGN TO BE SUBMITTED AS A SHOP DRAWING FOR APPROVAL
3. MANHOLE SHALL BE MADE WATER TIGHT AND SHALL HAVE A COAL TAR EPOXY COATING PER ASTM C-881
4. CONTRACTOR TO PROVIDE SHEETING/SHORING DESIGN FOR REVIEW & APPROVAL

CAST-IN-PLACE SANITARY SEWER MANHOLE

N.T.S.

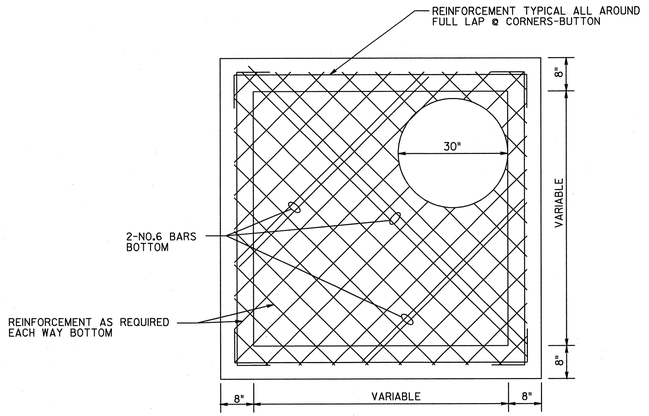

ROOF SLAB FOR RECTANGULAR BOX

N.T.S.

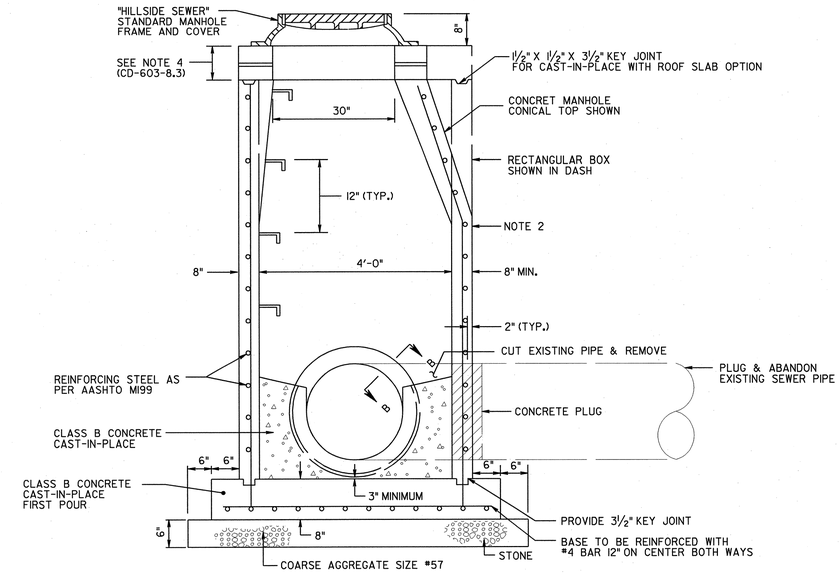

1. CAST-IN-PLACE CONCRETE MANHOLE SECTIONS SHALL BE DESIGNED FOR HS-25 LOADING
2. MANHOLE SHALL BE MADE WATER TIGHT AND SHALL HAVE A COAL TAR EPOXY COATING PER ASTM C-881
3. DESIGN TO BE SUBMITTED AS A SHOP DRAWING FOR APPROVAL

DOGHOUSE MANHOLE

N.T.S.

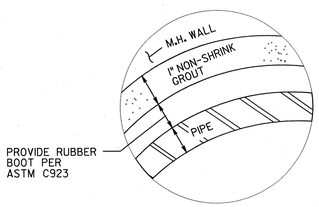

SECTION B-B

N.T.S.

DTL-6
DTL-10

UTILITY
KS ENGINEERS, P.C.
JACK PERLMUTTER
N.J. P.E. LIC. NO. 37648

NEW JERSEY DEPARTMENT OF TRANSPORTATION

CONSTRUCTION DETAILS

ROUTE 22 LIBERTY AVENUE
& CONRAIL BRIDGE
CONTRACT NO. 057009080

PB AMERICAS, INC.
CERTIFICATION OF AUTHORIZATION NO. 24GA28029800

STEVEN M. ARBIZ
NEW JERSEY PROFESSIONAL ENGINEER NO. 38119

PARSONS BRINCKERHOFF CADD DATA
OPERATOR runk QUEUE \\Priplot1\Oce_PI
PLOT DATE 01-DEC-2009 06:42
PENTABLE ehx.tbl
DESIGN FILE T:\100404\cd06.dgn

STATE	FEDERAL PROJECT NO.
N.J.	FS-BR-0040(168)

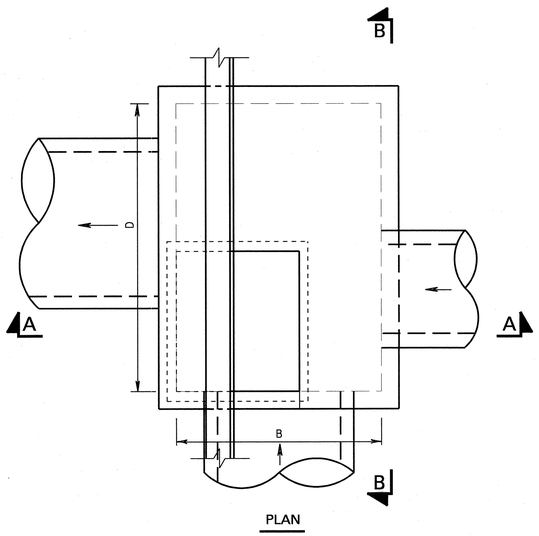

PLAN

TYPE	A	B	C	D
B2Y	0'	3.5'	2'	6'

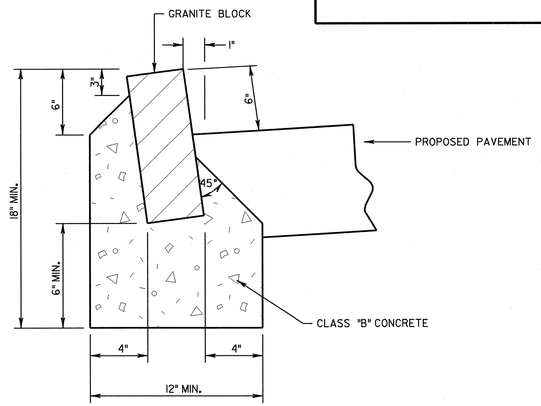

BELGIAN BLOCK CURB

N.T.S.

NOTES:

1. MINIMUM DIMENSIONS OF GRANITE BLOCK SHALL BE 4"X6"X12".
2. JOINTS BETWEEN BLOCKS SHALL BE ¾" WIDE, MAXIMUM AND POINTED WITH NONSHRINK CEMENT MORTAR.

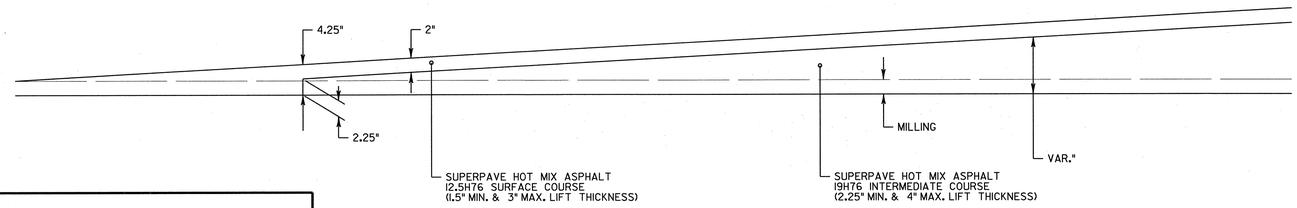

MILLING AND RESURFACING PAVEMENT TRANSITION DETAIL

N.T.S.

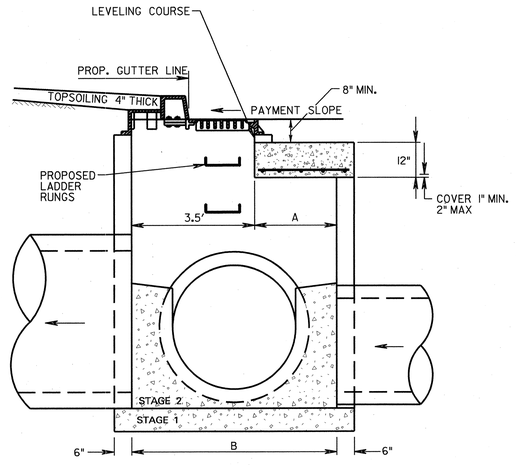

FOUNDATION AND INVERT TO BE CONSTRUCTED IN 2 STAGES. TOP SURFACE OF STAGE 1 TO BE LEFT ROUGH

SECTION A–A

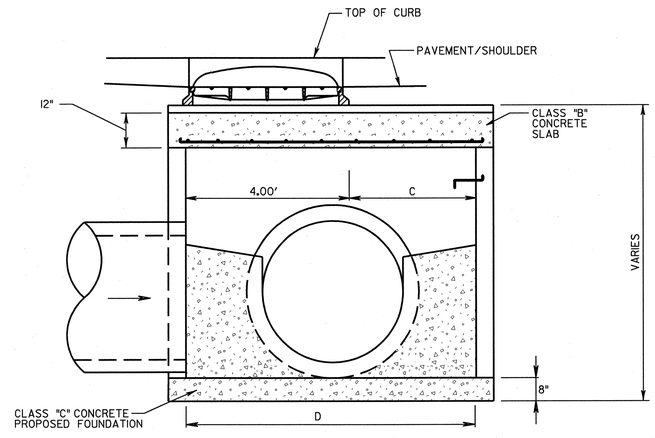

SECTION B–B

INLET TYPE B2Y

N.T.S.

NOTES:

1. FOR GENERAL NOTES SEE CONSTRUCTION DETAIL CD-602-1. SEE CONSTRUCTION DETAILS CD-602-3, CD-602-2, FOR C.I. FRAME AND GRATE DETAILS, SEE CD-602-1 AND CD-602-2 THE CONTRACTOR SHALL FIELD VERIFY ALL DIMENSIONS PRIOR TO CONSTRUCTION OR FABRICATION OF INLETS.
2. REINFORCEMENT IN THE WALLS AND TOP SLAB SHALL BE DESIGNED BY THE CONTRACTOR AND SUBMITTED TO THE ENGINEER FOR APPROVAL.

INLET TYPE B2Y
BELGIAN BLOCK CURB
MILLING & RESURFACING TRANSITION

DTL-7 / DTL-10

NEW JERSEY DEPARTMENT OF TRANSPORTATION

CONSTRUCTION DETAILS

ROUTE 22 LIBERTY AVENUE
& CONRAIL BRIDGE
CONTRACT NO. 057009080

PB AMERICAS, INC.
CERTIFICATION OF AUTHORIZATION NO. 24GA28029800

STEVEN M. ARBIZ
NEW JERSEY PROFESSIONAL ENGINEER NO. 38119

104

PARSONS BRINCKERHOFF CADD DATA

OPERATOR	rcunk
PLOT DATE	09-DEC-2009 06:43
PENTABLE	ehx.tbl
DESIGN FILE	T:\00040\cd07.dgn
QUEUE	\\Prjplot\Oce_PI

STATE	FEDERAL PROJECT NO.
N.J.	FS-BR-0040(168)

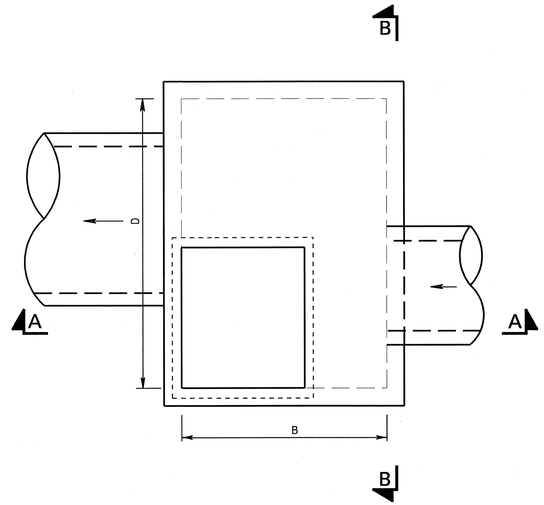

PLAN

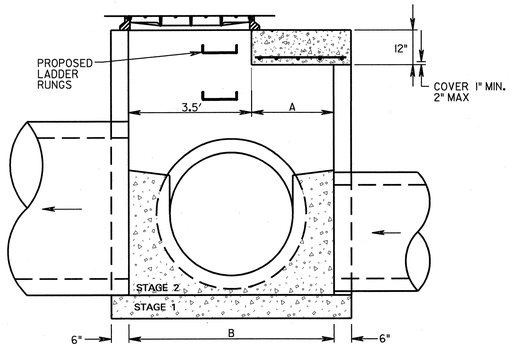

FOUNDATION AND INVERT TO BE CONSTRUCTED IN 2 STAGES. TOP SURFACE OF STAGE 1 TO BE LEFT ROUGH

SECTION A–A

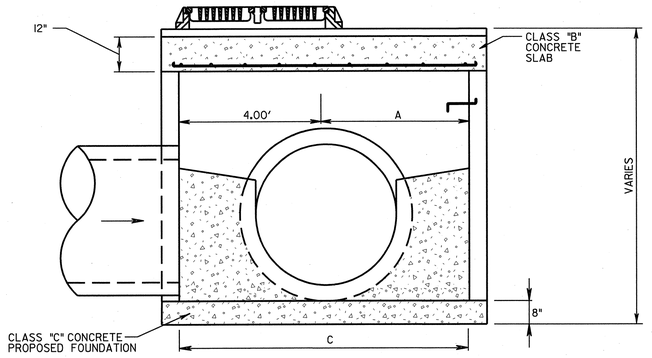

SECTION B–B

TYPE	A	B	C
E3X	3'	6.5'	7'

INLET TYPE E3X

N.T.S.

NOTES:

1. FOR GENERAL NOTES SEE CONSTRUCTION DETAIL CD-602-1. SEE CONSTRUCTION DETAILS CD-602-3, CD-602-2 FOR C.I. FRAME AND GRATE DETAILS, SEE CD-602-1, CD-602-2 AND CD-602-4. THE CONTRACTOR SHALL FIELD VERIFY ALL DIMENSIONS PRIOR TO CONSTRUCTION OR FABRICATION OF INLETS.
2. REINFORCEMENT IN THE WALLS AND TOP SLAB SHALL BE DESIGNED BY THE CONTRACTOR AND SUBMITTED TO THE ENGINEER FOR APPROVAL.

DTL-8 / DTL-10

NEW JERSEY DEPARTMENT OF TRANSPORTATION

CONSTRUCTION DETAILS

ROUTE 22 LIBERTY AVENUE
& CONRAIL BRIDGE
CONTRACT NO. 057009080

PB AMERICAS, INC.
CERTIFICATION OF AUTHORIZATION NO. 24GA28029800

STEVEN M. ARBIZ
NEW JERSEY PROFESSIONAL ENGINEER NO. 38119

105

PARSONS BRINCKERHOFF CADD DATA

OPERATOR	runk
PLOT DATE	01-DEC-2009 06:43
PENTABLE	etnx.tbl
DESIGN FILE	T:\100401\cd08.dgn
QUEUE	\\Priplot1\0ce_PI

STATE	FEDERAL PROJECT NO.
N.J.	FS-BR-0040(168)

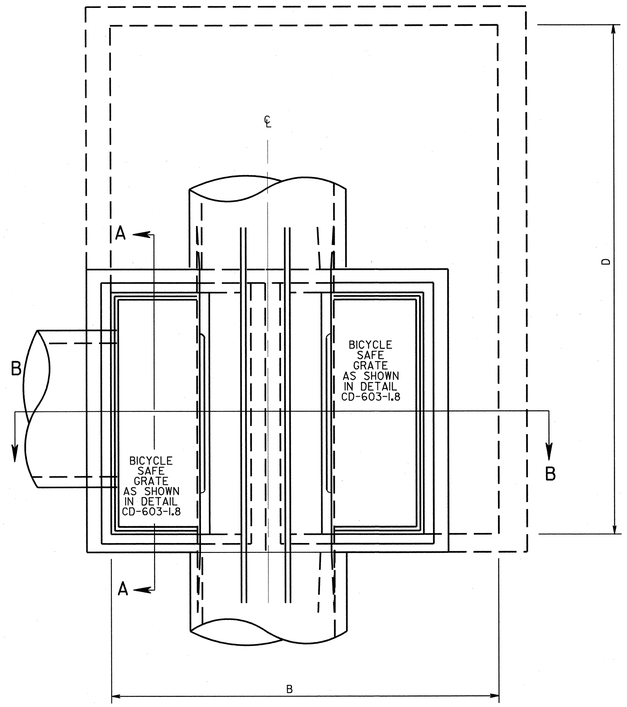

PLAN

TYPE	A	B	C	D
D2Y2	0′	5.5′	2′	6′

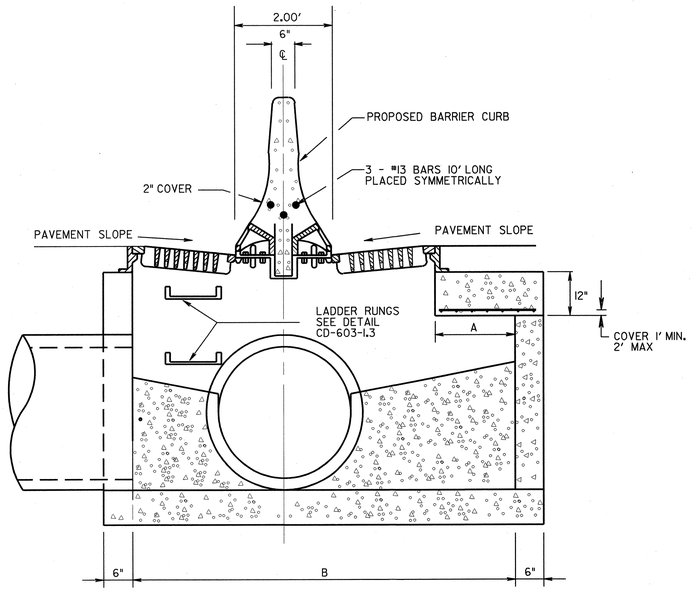

SECTION B-B

NOTES:

1. FOR GENERAL NOTES SEE CONSTRUCTION DETAIL CD-602-1.
   SEE CONSTRUCTION DETAILS CD-602-3, CD-602-2.
   FOR C.I. FRAME AND GRATE DETAILS, SEE CD-602-1, CD-602-2 AND CD-602-5.
   THE CONTRACTOR SHALL FIELD VERIFY ALL DIMENSIONS PRIOR TO CONSTRUCTION OR FABRICATION OF INLETS.
2. REINFORCEMENT IN THE WALLS AND TOP SLAB SHALL BE DESIGNED BY THE CONTRACTOR AND SUBMITTED TO THE ENGINEER FOR APPROVAL.

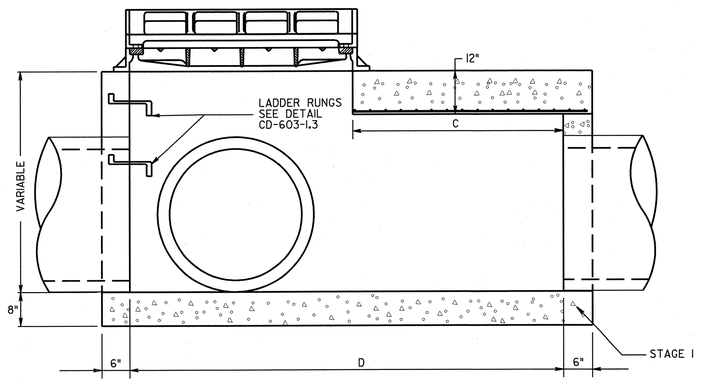

FOUNDATION AND INVERT TO BE CONSTRUCTED IN 2 STAGES THE TOP SURFACE OF STAGE I TO BE LEFT ROUGH.

SECTION A-A

INLET TYPE D2Y2

DTL-9
DTL-10

NEW JERSEY DEPARTMENT OF TRANSPORTATION

CONSTRUCTION DETAILS

ROUTE 22 LIBERTY AVENUE
& CONRAIL BRIDGE
CONTRACT NO. 057009080

PB AMERICAS, INC.
CERTIFICATION OF AUTHORIZATION NO. 24GA28029800
STEVEN M. ARBIZ
NEW JERSEY PROFESSIONAL ENGINEER NO. 38119

106

PARSONS BRINCKERHOFF CADD DATA

OPERATOR	rundk
PLOT DATE	01-DEC-2009 06:43
PENTABLE	enx.tbl
DESIGN FILE	T:\100404\cd09.dgn
QUEUE	\\Pripla1\Oce_Pl

STATE	FEDERAL PROJECT NO.
N.J.	FS-BR-0040(168)

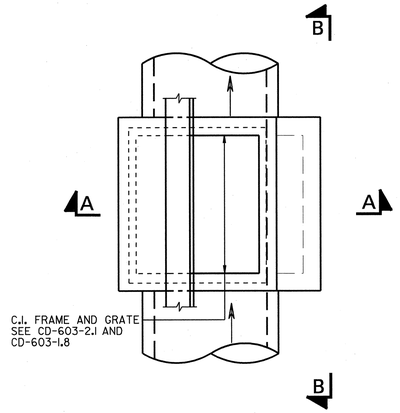

PLAN

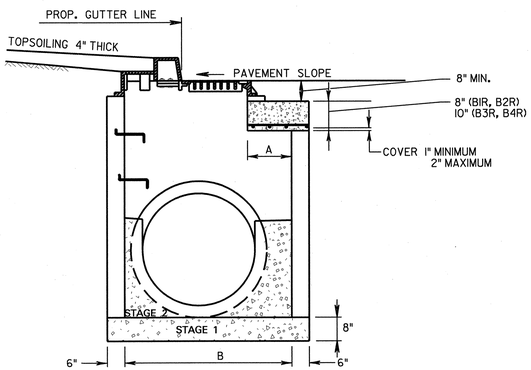

FOUNDATION AND INVERT TO BE CONSTRUCTED IN 2 STAGES. TOP SURFACE OF STAGE 1 TO BE LEFT ROUGH

SECTION A-A

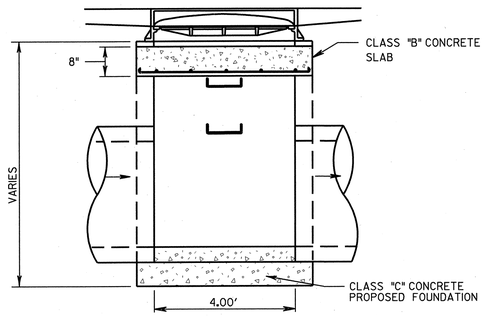

SECTION B-B

INLET TYPE B1R

N.T.S.

TYPE	A	B
B1R	1'	4.5'

NOTES:

1. FOR GENERAL NOTES SEE CONSTRUCTION DETAIL CD-602-1. SEE CONSTRUCTION DETAILS CD-602-3, CD-602-2. FOR C.I. FRAME AND GRATE DETAILS, SEE CD-602-1 AND CD-602-2 THE CONTRACTOR SHALL FIELD VERIFY ALL DIMENSIONS PRIOR TO CONSTRUCTION OR FABRICATION OF INLETS.
2. REINFORCEMENT IN THE WALLS AND TOP SLAB SHALL BE DESIGNED BY THE CONTRACTOR AND SUBMITTED TO THE ENGINEER FOR APPROVAL.

INLET TYPE B1R

DTL-10 / DTL-10

NEW JERSEY DEPARTMENT OF TRANSPORTATION

CONSTRUCTION DETAILS

ROUTE 22 LIBERTY AVENUE
& CONRAIL BRIDGE
CONTRACT NO. 057009080

PB AMERICAS, INC.
CERTIFICATION OF AUTHORIZATION NO. 24GA28029800

STEVEN M. ARBIZ
NEW JERSEY PROFESSIONAL ENGINEER NO. 38119

107

PARSONS BRINCKERHOFF CADD DATA

OPERATOR	runk	QUEUE	\\Priplot1\Oce_P1
PLOT DATE	01-DEC-2009 06:43		
PENTABLE	ehx.tbl		
DESIGN FILE	T:\100404\cd10.dgn		